IEC 61757-1-2

Edition 1.0 2023-08

INTERNATIONAL STANDARD

NORME INTERNATIONALE

colour inside

Fibre optic sensors –
Part 1-2: Strain measurement – Distributed sensing based on Brillouin scattering

Capteurs fibroniques –
Partie 1-2: Mesure de déformation – Détection répartie basée sur la diffusion de Brillouin

IEC 61757-1-2:2023-08(en-fr)

Documents
Document Sharing Hub

Full document details: IEC 61757-1-2-2023

THIS PUBLICATION IS COPYRIGHT PROTECTED
Copyright © 2023 IEC, Geneva, Switzerland

All rights reserved. Unless otherwise specified, no part of this publication may be reproduced or utilized in any form or by any means, electronic or mechanical, including photocopying and microfilm, without permission in writing from either IEC or IEC's member National Committee in the country of the requester. If you have any questions about IEC copyright or have an enquiry about obtaining additional rights to this publication, please contact the address below or your local IEC member National Committee for further information.

Droits de reproduction réservés. Sauf indication contraire, aucune partie de cette publication ne peut être reproduite ni utilisée sous quelque forme que ce soit et par aucun procédé, électronique ou mécanique, y compris la photocopie et les microfilms, sans l'accord écrit de l'IEC ou du Comité national de l'IEC du pays du demandeur. Si vous avez des questions sur le copyright de l'IEC ou si vous désirez obtenir des droits supplémentaires sur cette publication, utilisez les coordonnées ci-après ou contactez le Comité national de l'IEC de votre pays de résidence.

IEC Secretariat
3, rue de Varembé
CH-1211 Geneva 20
Switzerland

Tel.: +41 22 919 02 11
info@iec.ch
www.iec.ch

About the IEC
The International Electrotechnical Commission (IEC) is the leading global organization that prepares and publishes International Standards for all electrical, electronic and related technologies.

About IEC publications
The technical content of IEC publications is kept under constant review by the IEC. Please make sure that you have the latest edition, a corrigendum or an amendment might have been published.

IEC publications search - webstore.iec.ch/advsearchform
The advanced search enables to find IEC publications by a variety of criteria (reference number, text, technical committee, …). It also gives information on projects, replaced and withdrawn publications.

IEC Just Published - webstore.iec.ch/justpublished
Stay up to date on all new IEC publications. Just Published details all new publications released. Available online and once a month by email.

IEC Customer Service Centre - webstore.iec.ch/csc
If you wish to give us your feedback on this publication or need further assistance, please contact the Customer Service Centre: sales@iec.ch.

IEC Products & Services Portal - products.iec.ch
Discover our powerful search engine and read freely all the publications previews. With a subscription you will always have access to up to date content tailored to your needs.

Electropedia - www.electropedia.org
The world's leading online dictionary on electrotechnology, containing more than 22 300 terminological entries in English and French, with equivalent terms in 19 additional languages. Also known as the International Electrotechnical Vocabulary (IEV) online.

A propos de l'IEC
La Commission Electrotechnique Internationale (IEC) est la première organisation mondiale qui élabore et publie des Normes internationales pour tout ce qui a trait à l'électricité, à l'électronique et aux technologies apparentées.

A propos des publications IEC
Le contenu technique des publications IEC est constamment revu. Veuillez vous assurer que vous possédez l'édition la plus récente, un corrigendum ou amendement peut avoir été publié.

Recherche de publications IEC - webstore.iec.ch/advsearchform
La recherche avancée permet de trouver des publications IEC en utilisant différents critères (numéro de référence, texte, comité d'études, …). Elle donne aussi des informations sur les projets et les publications remplacées ou retirées.

IEC Just Published - webstore.iec.ch/justpublished
Restez informé sur les nouvelles publications IEC. Just Published détaille les nouvelles publications parues. Disponible en ligne et une fois par mois par email.

Service Clients - webstore.iec.ch/csc
Si vous désirez nous donner des commentaires sur cette publication ou si vous avez des questions contactez-nous: sales@iec.ch.

IEC Products & Services Portal - products.iec.ch
Découvrez notre puissant moteur de recherche et consultez gratuitement tous les aperçus des publications. Avec un abonnement, vous aurez toujours accès à un contenu à jour adapté à vos besoins.

Electropedia - www.electropedia.org
Le premier dictionnaire d'électrotechnologie en ligne au monde, avec plus de 22 300 articles terminologiques en anglais et en français, ainsi que les termes équivalents dans 19 langues additionnelles. Egalement appelé Vocabulaire Electrotechnique International (IEV) en ligne.

AVA Documents
Document Sharing Hub

Full document details: IEC 61757-1-2-2023

IEC 61757-1-2

Edition 1.0 2023-08

INTERNATIONAL STANDARD

NORME INTERNATIONALE

colour inside

Fibre optic sensors – Part 1-2: Strain measurement – Distributed sensing based on Brillouin scattering

Capteurs fibroniques – Partie 1-2: Mesure de déformation – Détection répartie basée sur la diffusion de Brillouin

INTERNATIONAL ELECTROTECHNICAL COMMISSION

COMMISSION ELECTROTECHNIQUE INTERNATIONALE

ICS 33.180.99

ISBN 978-2-8322-7396-8

Warning! Make sure that you obtained this publication from an authorized distributor.
Attention! Veuillez vous assurer que vous avez obtenu cette publication via un distributeur agréé.

® Registered trademark of the International Electrotechnical Commission
Marque déposée de la Commission Electrotechnique Internationale

AVA Documents Document Sharing Hub

Full document details: IEC 61757-1-2-2023

CONTENTS

FOREWORD 3
INTRODUCTION 5
1 Scope 6
2 Normative references 6
3 Terms, definitions, abbreviated terms and symbols 6
3.1 Terms and definitions 6
3.2 Abbreviated terms 10
3.3 Symbols 11
4 General test setups for measurement of performance parameters 11
4.1 General and test setup requirements 11
4.2 General documentation requirements 16
5 Measurement procedures for performance parameters 16
5.1 Strain measurement error 16
5.1.1 Test procedure and conditions 16
5.1.2 Parameter calculation and reporting 17
5.2 Spatial resolution 17
5.2.1 Test procedure and conditions 17
5.2.2 Parameter calculation and reporting 18
5.3 Strain repeatability 18
5.3.1 Test procedure and conditions 18
5.3.2 Parameter calculation and reporting 18
5.4 Spatial strain uncertainty 19
5.4.1 Test procedure and conditions 19
5.4.2 Parameter calculation and reporting 19
5.5 Warm-up time 20
5.5.1 Test procedure and conditions 20
5.5.2 Parameter calculation and reporting 20
5.6 System performance with altered attenuation 20
5.6.1 General 20
5.6.2 At distance measurement range 21
5.6.3 At short distance with high loss 22
Bibliography 24

Figure 1 – Optical fibre strain profile and related strain sample points 8
Figure 2 – General test setup for single-ended configuration 12
Figure 3 – General test setup for loop configuration 13
Figure 4 – Measured versus applied strain (typical curve) 15
Figure 5 – Brillouin frequency shift as a function of elongation of a standard telecommunication fibre 15
Figure 6 – Performance evaluation at distance measurement range 21
Figure 7 – Performance evaluation at short distance with high loss 22

Documents
Document Sharing Hub
Full document details: IEC 61757-1-2-2023

INTERNATIONAL ELECTROTECHNICAL COMMISSION

FIBRE OPTIC SENSORS –

Part 1-2: Strain measurement – Distributed sensing based on Brillouin scattering

FOREWORD

1) The International Electrotechnical Commission (IEC) is a worldwide organization for standardization comprising all national electrotechnical committees (IEC National Committees). The object of IEC is to promote international co-operation on all questions concerning standardization in the electrical and electronic fields. To this end and in addition to other activities, IEC publishes International Standards, Technical Specifications, Technical Reports, Publicly Available Specifications (PAS) and Guides (hereafter referred to as "IEC Publication(s)"). Their preparation is entrusted to technical committees; any IEC National Committee interested in the subject dealt with may participate in this preparatory work. International, governmental and non-governmental organizations liaising with the IEC also participate in this preparation. IEC collaborates closely with the International Organization for Standardization (ISO) in accordance with conditions determined by agreement between the two organizations.
2) The formal decisions or agreements of IEC on technical matters express, as nearly as possible, an international consensus of opinion on the relevant subjects since each technical committee has representation from all interested IEC National Committees.
3) IEC Publications have the form of recommendations for international use and are accepted by IEC National Committees in that sense. While all reasonable efforts are made to ensure that the technical content of IEC Publications is accurate, IEC cannot be held responsible for the way in which they are used or for any misinterpretation by any end user.
4) In order to promote international uniformity, IEC National Committees undertake to apply IEC Publications transparently to the maximum extent possible in their national and regional publications. Any divergence between any IEC Publication and the corresponding national or regional publication shall be clearly indicated in the latter.
5) IEC itself does not provide any attestation of conformity. Independent certification bodies provide conformity assessment services and, in some areas, access to IEC marks of conformity. IEC is not responsible for any services carried out by independent certification bodies.
6) All users should ensure that they have the latest edition of this publication.
7) No liability shall attach to IEC or its directors, employees, servants or agents including individual experts and members of its technical committees and IEC National Committees for any personal injury, property damage or other damage of any nature whatsoever, whether direct or indirect, or for costs (including legal fees) and expenses arising out of the publication, use of, or reliance upon, this IEC Publication or any other IEC Publications.
8) Attention is drawn to the Normative references cited in this publication. Use of the referenced publications is indispensable for the correct application of this publication.
9) IEC draws attention to the possibility that the implementation of this document may involve the use of (a) patent(s). IEC takes no position concerning the evidence, validity or applicability of any claimed patent rights in respect thereof. As of the date of publication of this document, IEC had not received notice of (a) patent(s), which may be required to implement this document. However, implementers are cautioned that this may not represent the latest information, which may be obtained from the patent database available at https://patents.iec.ch. IEC shall not be held responsible for identifying any or all such patent rights.

IEC 61757-1-2 has been prepared by subcommittee 86C: Fibre optic systems and active devices, of IEC technical committee 86: Fibre optics. It is an International Standard.

The text of this International Standard is based on the following documents:

Draft	Report on voting
86C/1857/CDV	86C/1872/RVC

Full information on the voting for its approval can be found in the report on voting indicated in the above table.

The language used for the development of this International Standard is English.

Documents
Document Sharing Hub

This document was drafted in accordance with ISO/IEC Directives, Part 2, and developed in accordance with ISO/IEC Directives, Part 1 and ISO/IEC Directives, IEC Supplement, available at www.iec.ch/members_experts/refdocs. The main document types developed by IEC are described in greater detail at www.iec.ch/publications.

A list of all parts in the IEC 61757 series, published under the general title *Fibre optic sensors*, can be found on the IEC website.

The committee has decided that the contents of this document will remain unchanged until the stability date indicated on the IEC website under webstore.iec.ch in the data related to the specific document. At this date, the document will be

- reconfirmed,
- withdrawn, or
- revised.

IMPORTANT – The "colour inside" logo on the cover page of this document indicates that it contains colours which are considered to be useful for the correct understanding of its contents. Users should therefore print this document using a colour printer.

Documents
Document Sharing Hub

Full document details: IEC 61757-1-2-2023

INTRODUCTION

This document is part of the IEC 61757 series, which is dedicated to fibre optic sensors. Generic specifications for fibre optic sensors are defined in IEC 61757.

The individual parts of the IEC 61757 series are numbered as IEC 61757-M-T, where M denotes the measure and T the technology of the fibre optic sensor. The IEC 61757-1-T series is concerned with strain measurements.

Documents
Document Sharing Hub

Full document details: IEC 61757-1-2-2023

FIBRE OPTIC SENSORS –

Part 1-2: Strain measurement – Distributed sensing based on Brillouin scattering

1 Scope

This part of IEC 61757 defines detailed specifications for distributed strain measurements with a fibre optic sensor, also known as "fibre optic distributed strain sensing". It is applicable to distributed strain sensing systems (DSS) based on spontaneous or stimulated Brillouin scattering in the optical fibre sensor (strain sensitive element), that is, to sensors capable of measuring absolute strain.

This document specifies the most important DSS performance parameters and defines the procedures for their determination.

2 Normative references

The following documents are referred to in the text in such a way that some or all of their content constitutes requirements of this document. For dated references, only the edition cited applies. For undated references, the latest edition of the referenced document (including any amendments) applies.

IEC 61757:2018, *Fibre optic sensors – Generic specification*

IEC 61757-2-2:2016, *Fibre optic sensors – Part 2-2: Temperature measurement – Distributed sensing*

IEC 61757-3-2:2022, *Fibre optic sensors – Part 3-2: Acoustic sensing and vibration measurement – Distributed sensing*

ISO/IEC Guide 98-3, *Uncertainty of measurement – Part 3: Guide to the expression of uncertainty in measurement (GUM:1995)*

3 Terms, definitions, abbreviated terms and symbols

3.1 Terms and definitions

For the purposes of this document, the terms and definitions given in IEC 61757, IEC 61757-2-2, IEC 61757-3-2, and the following apply.

ISO and IEC maintain terminology databases for use in standardization at the following addresses:

- IEC Electropedia: available at https://www.electropedia.org/
- ISO Online browsing platform: available at https://www.iso.org/obp

NOTE For the following definitions, the relevant test procedures and parameters are defined in Clause 4.

Documents
Document Sharing Hub

Full document details: IEC 61757-1-2-2023

3.1.1
distributed fibre optic strain sensing system
DSS
measurement set-up consisting of a distributed fibre optic sensor connected to an interrogation unit, including processor, data archive, and user interface, which provides a spatially resolved strain measurement

[SOURCE: IEC 61757-3-2:2022, 3.1.2, modified − adapted to distributed strain measurement]

3.1.2
distance measurement range
maximum distance from the DSS interrogation unit output connector along the fibre optic sensor within which the DSS measures strain with specified measurement performance under defined conditions

Note 1 to entry: Defined conditions are spatial resolution (3.1.8), spatial strain uncertainty (3.1.9) and measurement time (3.1.5).

Note 2 to entry: This supporting parameter is closely related to the total accumulated optical loss (one way) tolerated by the interrogation unit without affecting specified measurement performance. In test cases used to prove or verify the reported specifications, the total fibre length shall be equal to or greater than the specified distance measurement range, for the tolerated total accumulated optical loss.

Note 3 to entry: The distance measurement range is usually expressed in km.

Note 4 to entry: For fibre loop configurations, the distance measurement range is given by half the fibre length between the output and input connector of the interrogation unit.

[SOURCE: IEC 61757-2-2:2016, 3.2, and ISO/IEC Guide 99:2007, 4.7, modified − adapted to distributed strain measurement]

3.1.3
strained spot
ΔL
length of fibre optic sensor that experiences a small elongation (δL), which causes strain that is significantly bigger than the strain repeatability of the interrogation unit and which is confirmed by a reference strain measurement

Note 1 to entry: The applied strain ε is equal to ($\delta L/\Delta L$).

Note 2 to entry: It is useful to define strain in με, where 1 με corresponds to a δL of 1 μm over a ΔL of 1 m.

[SOURCE: IEC 61757-2-2:2016, 3.6, modified − adapted to distributed strain measurement]

3.1.4
location
$\boldsymbol{L}$
optical distance from the DSS interrogation unit output connector to a desired strain sample point along the fibre optic sensor

Note 1 to entry: The farthest location from the DSS interrogation unit output connector for the particular test is quantified as $L_{\mathrm{F,long}}$ km and is often chosen to be the same as the distance measurement range for purposes of comparing the measurement results with quoted specifications.

Note 2 to entry: The location is usually expressed in km.

[SOURCE: IEC 61757-2-2:2016, 3.7, modified − adapted to distributed strain measurement]

Documents
Document Sharing Hub
Full document details: IEC 61757-1-2-2023

3.1.5
measurement time
time between independent strain measurements when making successive measurements on a single fibre optic sensor

Note 1 to entry: Equivalently, it is the time interval between successive strain trace timestamps under these conditions.

Note 2 to entry: This parameter includes acquisition time and processing time for the measured data. This parameter is typically selectable by the user in some limited fashion. Multiple independent strain measurements may be averaged together to provide an overall measurement time.

[SOURCE: IEC 61757-2-2:2016, 3.8, modified − adapted to distributed strain measurement]

3.1.6
point defect
local deviation of a fibre optic sensor from its nominal optical and mechanical properties occurring at a single location, or over a length substantially less than the DSS spatial resolution

Note 1 to entry: The definition of a point defect encompasses a wide range of situations, which can produce similar effects on the strain trace. Examples include

– a point loss, like a bad fibre splice,
– a back reflection (or return loss), as can be introduced by a fibre connector,
– a localized region of high loss, such as a bend or kink in the fibre, and
– a physical discontinuity in the fibre, like a splice between two fibres of different core diameters.

[SOURCE: IEC 61757-2-2:2016, 3.9, modified − adapted to distributed strain measurement]

3.1.7
sample spacing
distance between two consecutive strain sample points in a single strain trace

Note 1 to entry: Sample spacing can be a user-selectable parameter in the interrogation unit.

Note 2 to entry: The sample spacing is usually expressed in m.

Note 3 to entry: See Figure 1.

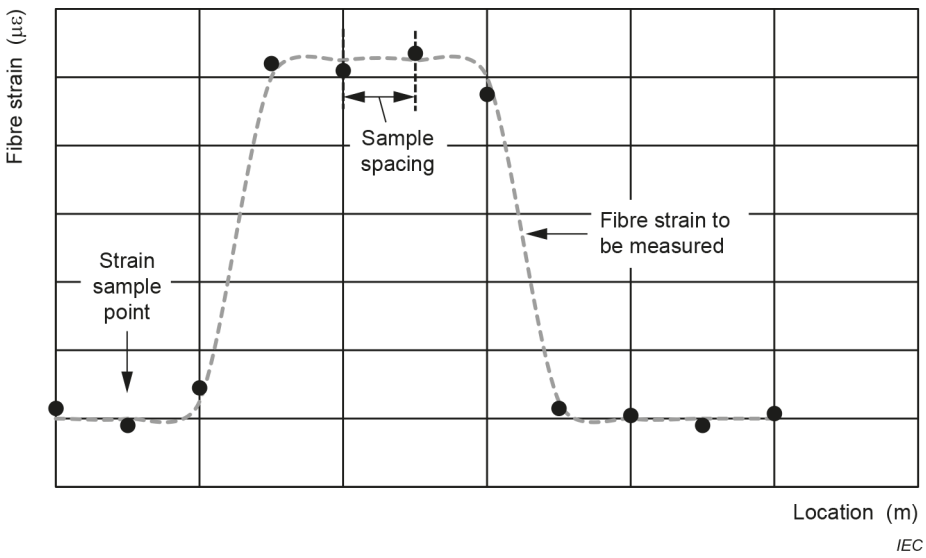

Figure 1 – Optical fibre strain profile and related strain sample points

[SOURCE: IEC 61757-2-2:2016, 3.11, modified − adapted to distributed strain measurement]

Documents
Document Sharing Hub
Full document details: IEC 61757-1-2-2023

3.1.8
spatial resolution
smallest length of strain-affected fibre optic sensor for which a DSS can measure and confirm the reference strain of a defined strained spot within the specified strain measurement error of the DSS

Note 1 to entry: The spatial resolution is usually expressed in m.

[SOURCE: IEC 61757-2-2:2016, 3.12, modified − adapted to distributed strain measurement]

3.1.9
spatial strain uncertainty
uncertainty of the location of strain data in a single strain trace, expressed by twice the standard deviation of a specified number of adjacent strain sample points, with the fibre optic sensor held at constant strain and temperature

Note 1 to entry: Due to a potential cross-sensitivity of DSS to temperature, it can be necessary to stabilize the temperature of the fibre optic sensor.

Note 2 to entry: The spatial strain uncertainty is usually expressed in units of με and noted as a tolerance (e.g. ±xx με), where 1 με corresponds to a δL of 1 μm over a ΔL of 1 m.

[SOURCE: IEC 61757-2-2:2016, 3.13, modified − adapted to distributed strain measurement]

3.1.10
strain dead zone
limited zone of a strain trace, where the strain sample points deviate from the undisturbed parts of the trace by a specified limit due to a point defect

Note 1 to entry: The strain dead zone is usually expressed in m.

[SOURCE: IEC 61757-2-2:2016, 3.14, modified − adapted to distributed strain measurement]

3.1.11
strain measurement error
maximum difference between a centred and uniformly weighted moving average of the measured strain and a reference strain for all data points of the fibre optic sensor over the full operating temperature range and all acquisition times

Note 1 to entry: Single value (worst case) is expressed like a tolerance in units of με (e.g. ±xx με).

Note 2 to entry: The number of elements used for the moving average is defined later in the document. In practical applications, other methods of smoothing might be applicable.

[SOURCE: IEC 61757-2-2:2016, 3.15, modified − adapted to distributed strain measurement]

3.1.12
strain repeatability
precision of strain data based on repeated strain traces at a given location expressed by twice the standard deviation of corresponding strain sample points in each strain trace, with the fibre optic sensor held at constant strain and temperature

Note 1 to entry: The strain repeatability is expressed like a tolerance in units of με (e.g. ±xx με).

[SOURCE: IEC 61757-2-2:2016, 3.16, modified − adapted to distributed strain measurement]

Documents
Document Sharing Hub
Full document details: IEC 61757-1-2-2023

3.1.13
strain sample point
measured strain value associated with a single point at a known location along a fibre optic sensor

Note 1 to entry: Due to signal averaging effects, the measured value represents the strain along a very small section of the fibre optic sensor that includes the strain sample point.

Note 2 to entry: See Figure 1.

[SOURCE: IEC 61757-2-2:2016, 3.17, modified − adapted to distributed strain measurement]

3.1.14
strain trace
set of strain sample points distributed along a fibre optic sensor and spaced by the sample spacing

Note 1 to entry: All sample points are associated with a common time of measurement, often called "trace timestamp". The measured values represent the strain during a time period that includes the timestamp.

Note 2 to entry: All sample points in a strain trace are measured values produced by the DSS, and not interpolated or smoothed values produced by subsequent processing outside the interrogation unit.

[SOURCE: IEC 61757-2-2:2016, 3.18, modified − adapted to distributed strain measurement]

3.1.15
total fibre length
$L_{\mathrm{F,tot}}$
distance from the DSS interrogation unit output connector to the final end of the fibre optic sensor

Note 1 to entry: The final end of the fibre optic sensor can be either a purposely cut or terminated end of the fibre, physically located far from the interrogation unit (in a single-ended configuration), or the end of a loop consisting of a connector that is connected to the same interrogation unit (in a loop configuration).

Note 2 to entry: This parameter is either equal to or greater than the distance measurement range and usually expressed in km.

[SOURCE: IEC 61757-2-2:2016, 3.19, modified − adapted to distributed strain measurement]

3.1.16
warm-up time
duration between the instant after which the power supply of the DSS interrogation unit is energized and the instant when the interrogation unit may be used as specified by the manufacturer

Note 1 to entry: Warm-up time is usually expressed in seconds or minutes.

Note 2 to entry: The warm-up time helps to upload software and to stabilize operating temperatures of optical and electronic components.

[SOURCE: IEC 60050-311:2001, 311-03-18, modified − adapted to distributed strain measurement]

3.2 Abbreviated terms

DSS distributed fibre optic strain sensing system

FAT factory acceptance test

LVDT linear variable differential transformer

VOA variable optical attenuator

Documents
Document Sharing Hub
Full document details: IEC 61757-1-2-2023

3.3 Symbols

A	cross-sectional area
E	Young's modulus
F	force
L	optical distance from the output connector to a desired strain sample point
$L_{F,opt}$, $L_{F,short}$	fibre lengths
$L_{F,loop}$, $L_{F,long}$	fibre lengths
$L_{F,tot}$	total fibre length
ΔL	length of fibre optic sensor to be strained (strained spot)
δL	small change in length of ΔL
N, n	number of traces, number of data points
S	standard deviation
T	temperature
T_{low}, T_{op}, T_{high}	minimum, typical, and maximum DSS operating temperature
T_{STC}	ambient operating temperature of the strain test section
ε	strain
ε_{rep}	strain repeatability
ε_{unc}	spatial strain uncertainty
σ	stress

4 General test setups for measurement of performance parameters

4.1 General and test setup requirements

General test setups for single-ended and loop configurations are schematically shown in Figure 2 and Figure 3, respectively. The aim of these setups is to provide a common base for determining the measurement specifications while at the same time minimizing complexity, cost, reconfiguration requirements, and test execution time. Temperature stabilisation is used to avoid crosstalk from temperature.

Documents
Document Sharing Hub
Full document details: IEC 61757-1-2-2023

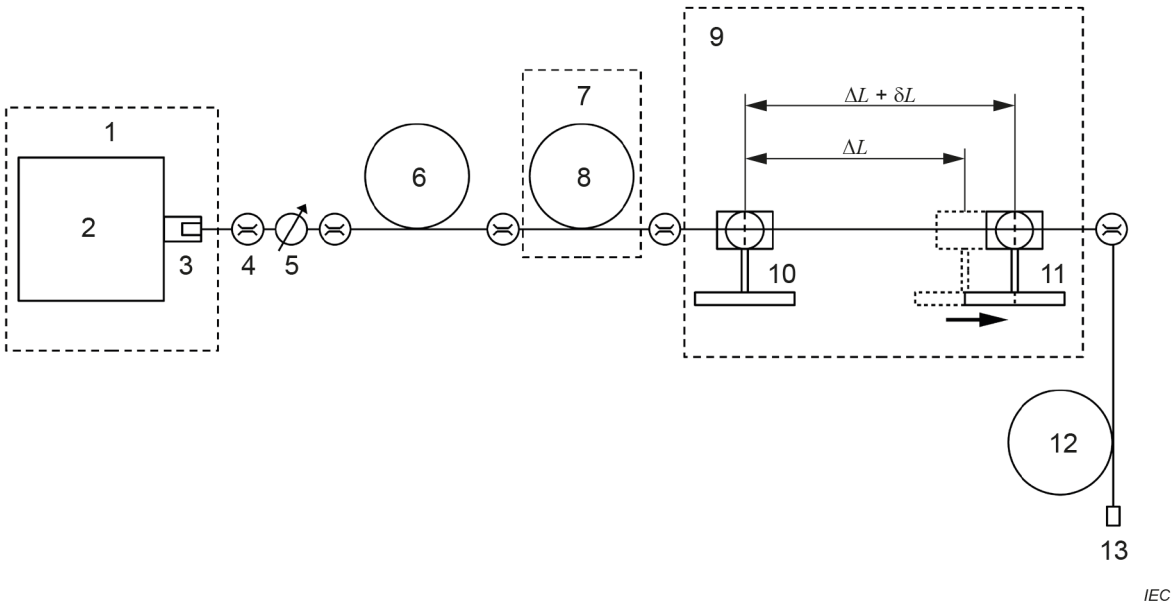

Key

1 temperature-controlled encasement (e.g. temperature chamber)

2 DSS interrogation unit

3 DSS interrogation unit output connector

4 fibre fusion splice

5 optional variable optical attenuator

6 optional long fibre length $L_{F,opt}$ (normal spool)

7 temperature-controlled environment for stable ambient conditions

8 long fibre length $L_{F,long}$ (loose and strain free wound)

9 strain test section with temperature-controlled environment for stable ambient conditions

10 fixed fibre clamping unit

11 movable fibre clamping unit

12 short fibre length $L_{F,short}$ (loose wound), longer than 5 times the spatial resolution

13 fibre termination

Figure 2 – General test setup for single-ended configuration

Documents
Document Sharing Hub
Full document details: IEC 61757-1-2-2023

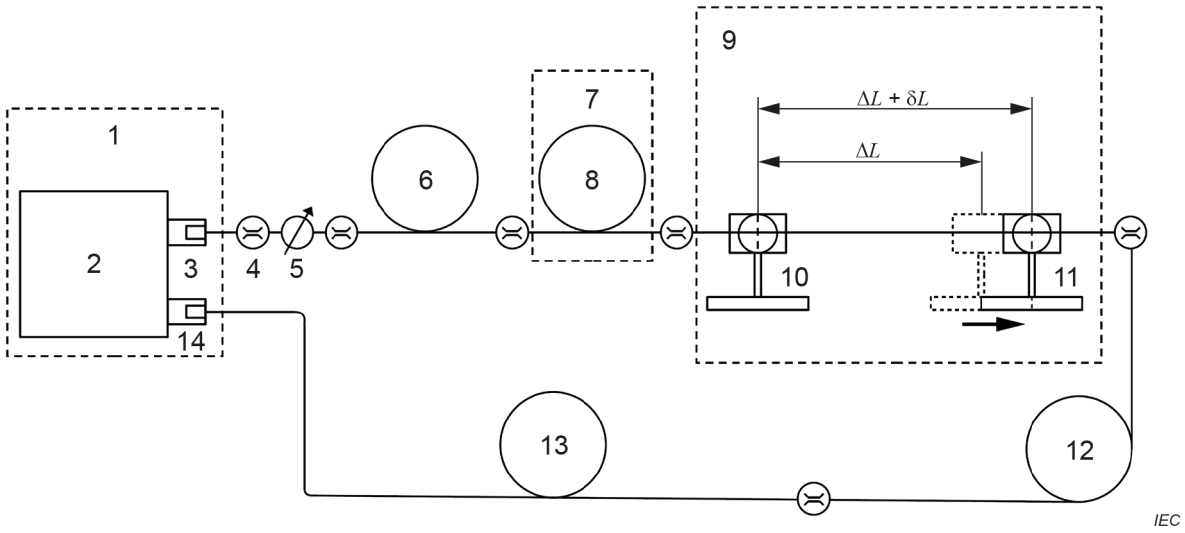

Key

1 temperature-controlled encasement (e.g. temperature chamber)

2 DSS interrogation unit

3 DSS interrogation unit output connector

4 fibre fusion splice

5 optional variable optical attenuator

6 optional long fibre length $L_{F,opt}$ (normal spool)

7 temperature-controlled environment for stable ambient conditions

8 long fibre length $L_{F,long}$ (loose and strain free wound)

9 strain test section with temperature-controlled environment for stable ambient conditions

10 fixed fibre clamping unit

11 movable fibre clamping unit

12 long fibre length $L_{F,short}$ (loose wound), longer than 5 times the spatial resolution

13 long fibre length $L_{F,loop}$ (normal spool), with $L_{F,loop} > (L_{F,opt} + L_{F,long} + \Delta L + L_{F,short})$

14 DSS interrogation unit input connector

Figure 3 – General test setup for loop configuration

The temperature-controlled encasement containing the DSS interrogation unit shall provide a steady temperature, for an extended period of time, within the temperature operating range ($T_{low} \leq T_{op} \leq T_{high}$) of the device under test. It is recommended to use commercial off-the-shelf temperature chambers for determining the performance parameters. Minimum requirements for such a device are:

– minimum and maximum temperature shall exceed the minimal and maximal operating temperature of the interrogation unit under test;

– temperature variation in time (steady state): less than (±0,5 °C);

– temperature homogeneity in volume: less than (±1,5 °C).

For the optical power adjustment, a calibrated optical attenuator or an optical attenuator that can be self-calibrated shall be used. Recommendations for a variable optical attenuator are:

– calibrated for the wavelength of operation (or self-calibrated with a power meter);

– variable attenuation range from 2 dB to 6 dB;

– resolution of attenuation setting as needed, assumed to be accurate within 0,1 dB.

AVA Documents
Document Sharing Hub
Full document details: IEC 61757-1-2-2023

It is also acceptable to use calibrated fixed attenuators. More information on fibre optic passive power control devices can be found in IEC 60869-1.

The strain test section shall reproducibly provide different levels of constant strain of the optical sensor fibre length ΔL. A commercially available single-mode fibre shall be used as the optical sensor fibre. The fibre strain shall be monitored and measured with suitable measuring instruments. Suitable measuring instruments are, for example, a laser interferometric length measuring system or a linear variable differential transformer (LVDT) to determine the fibre elongation. If Young's modulus of the fibre is known, a force transducer may be used to measure the pulling force, from which the strain can be calculated using Formula (1). No interfering influences (for example, due to high compressive load or slipping) on the strain measurement shall be caused by fibre clamping. Minimum requirements for the strain test section are:

– minimum length of fibre optic sensor ΔL to be strained: ΔL > (3 × spatial resolution);
– fibre strain to be obtained: 0,3 % ≤ ε ≤ 1 %.

NOTE When determining the performance of the DSS interrogation unit with a dedicated sensor cable, one can first determine the DSS performance with a regular single-mode fibre and then repeat the measurement with the sensor cable instead of the regular single-mode fibre.

For strain measurements at relatively long distances $L_{\mathrm{F,tot}}$ (e.g. 50 km), the spatial resolution can be in the order of several meters (e.g. 2 m to 3 m), so that the strain test section would have to be fairly long (e.g. 6 m to 9 m). In such cases, strain and repeatability measurements may be performed at different fibre lengths $L_{\mathrm{F,long}}$, where the strain measurement is performed with a short fibre of less than 5 km length, and the repeatability is measured without externally applied strain at the original length $L_{\mathrm{F,long}}$.

The strain test section and the entire fibre length of the sensor shall be operated at stable ambient conditions (recommended T_{STC} = (23 ± 0,5) °C and (55 ± 10) % RH).

The sensing fibre of length $L_{\mathrm{F,long}}$ or fibre sections of sufficient length shall be installed and operated without any permanent strain applied.

In a horizontal setup of the strain test section, the fibre weight can cause some sagging, which should be negligible (mainly less than the resolution of the interrogation unit). When strain is applied to the sagging fibre by increasing ΔL, the fibre first becomes straight with increasing displacement δL before the measured strain increases linearly with applied strain. Zero strain shall be defined by the intersection of a linear fit of the measured versus applied strain curve with the X-axis, as shown in Figure 4. The corresponding length ΔL_0 shall be used as a reference for strain calculation.

Figure 4 shows a typical curve of measured strain versus applied strain resulting from a combination of displacement and strain. When the measured strain is expressed in the physical quantity measured by the interrogation unit (for instance, the frequency shift in a Brillouin based system), the slope of the linear fit corresponds to the calibration coefficient of the interrogation unit, as shown in the example of Figure 5.

Documents
Document Sharing Hub
Full document details: IEC 61757-1-2-2023

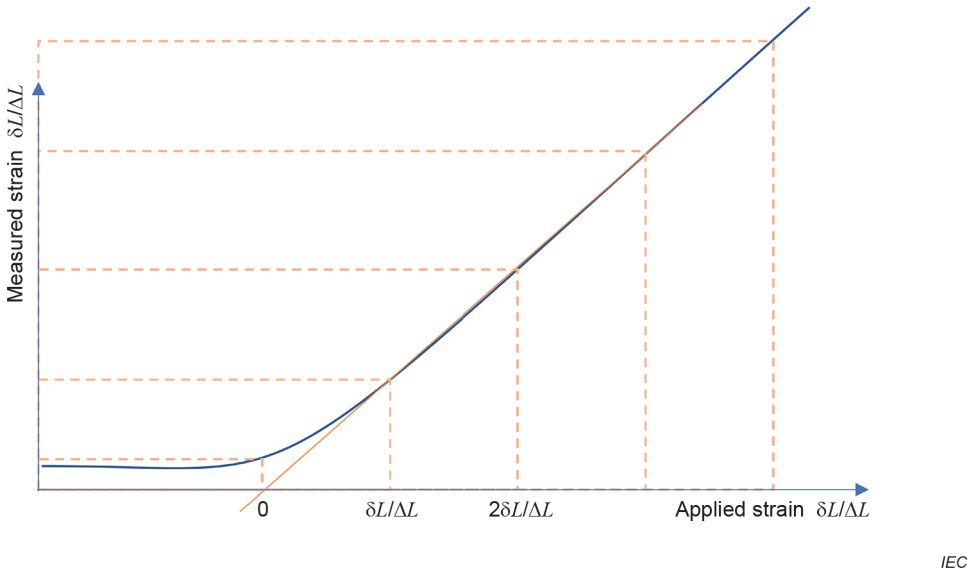

Figure 4 – Measured versus applied strain (typical curve)

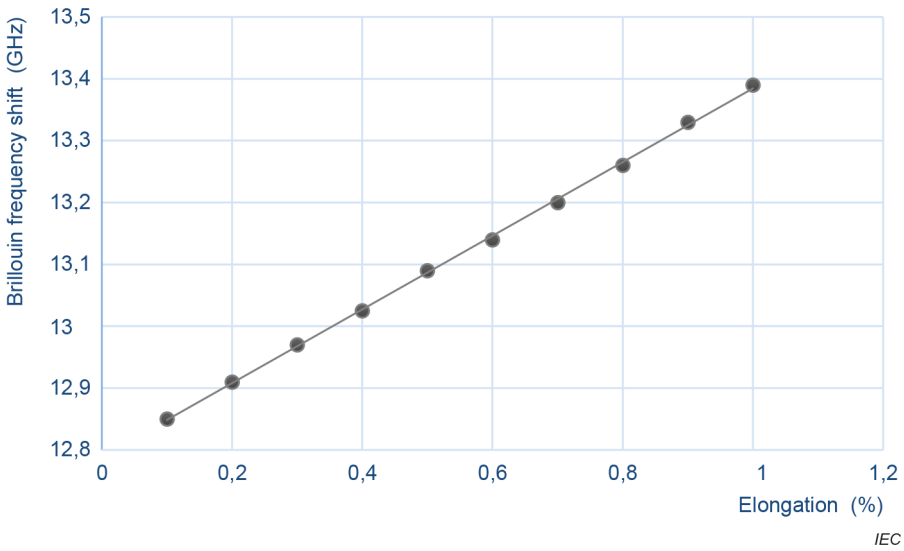

Figure 5 – Brillouin frequency shift as a function of elongation of a standard telecommunication fibre

As an alternative to the horizontal setup of the strain test section, a vertical setup with several different weights can be used as the loading mechanism.

The fibre strain ε can be calculated from Formula (1).

$$\sigma = E\,\varepsilon = \frac{F}{A} \tag{1}$$

where

σ is the stress;

ε is the fibre strain;

E is Young's modulus of the fibre;

F is the force applied to the fibre by the weight (or the pulling force);

A is the cross-sectional area of the fibre.

Documents
Document Sharing Hub
Full document details: IEC 61757-1-2-2023