IEC 61757-6-1

Edition 1.0 2024-01

INTERNATIONAL STANDARD

NORME INTERNATIONALE

Fibre optic sensors –
Part 6-1: Displacement measurement – Displacement sensors based on fibre Bragg gratings

Capteurs fibroniques –
Partie 6-1: Mesure de déplacement – Capteurs de déplacement basés sur des réseaux de Bragg sur fibre

IEC 61757-6-1:2024-01(en-fr)

Documents
Document Sharing Hub

Full document details: IEC 61757-6-1-2024

THIS PUBLICATION IS COPYRIGHT PROTECTED
Copyright © 2024 IEC, Geneva, Switzerland

All rights reserved. Unless otherwise specified, no part of this publication may be reproduced or utilized in any form or by any means, electronic or mechanical, including photocopying and microfilm, without permission in writing from either IEC or IEC's member National Committee in the country of the requester. If you have any questions about IEC copyright or have an enquiry about obtaining additional rights to this publication, please contact the address below or your local IEC member National Committee for further information.

Droits de reproduction réservés. Sauf indication contraire, aucune partie de cette publication ne peut être reproduite ni utilisée sous quelque forme que ce soit et par aucun procédé, électronique ou mécanique, y compris la photocopie et les microfilms, sans l'accord écrit de l'IEC ou du Comité national de l'IEC du pays du demandeur. Si vous avez des questions sur le copyright de l'IEC ou si vous désirez obtenir des droits supplémentaires sur cette publication, utilisez les coordonnées ci-après ou contactez le Comité national de l'IEC de votre pays de résidence.

IEC Secretariat
3, rue de Varembé
CH-1211 Geneva 20
Switzerland

Tel.: +41 22 919 02 11
info@iec.ch
www.iec.ch

About the IEC
The International Electrotechnical Commission (IEC) is the leading global organization that prepares and publishes International Standards for all electrical, electronic and related technologies.

About IEC publications
The technical content of IEC publications is kept under constant review by the IEC. Please make sure that you have the latest edition, a corrigendum or an amendment might have been published.

IEC publications search - webstore.iec.ch/advsearchform
The advanced search enables to find IEC publications by a variety of criteria (reference number, text, technical committee, …). It also gives information on projects, replaced and withdrawn publications.

IEC Just Published - webstore.iec.ch/justpublished
Stay up to date on all new IEC publications. Just Published details all new publications released. Available online and once a month by email.

IEC Customer Service Centre - webstore.iec.ch/csc
If you wish to give us your feedback on this publication or need further assistance, please contact the Customer Service Centre: sales@iec.ch.

IEC Products & Services Portal - products.iec.ch
Discover our powerful search engine and read freely all the publications previews, graphical symbols and the glossary. With a subscription you will always have access to up to date content tailored to your needs.

Electropedia - www.electropedia.org
The world's leading online dictionary on electrotechnology, containing more than 22 500 terminological entries in English and French, with equivalent terms in 25 additional languages. Also known as the International Electrotechnical Vocabulary (IEV) online.

A propos de l'IEC
La Commission Electrotechnique Internationale (IEC) est la première organisation mondiale qui élabore et publie des Normes internationales pour tout ce qui a trait à l'électricité, à l'électronique et aux technologies apparentées.

A propos des publications IEC
Le contenu technique des publications IEC est constamment revu. Veuillez vous assurer que vous possédez l'édition la plus récente, un corrigendum ou amendement peut avoir été publié.

Recherche de publications IEC - webstore.iec.ch/advsearchform
La recherche avancée permet de trouver des publications IEC en utilisant différents critères (numéro de référence, texte, comité d'études, …). Elle donne aussi des informations sur les projets et les publications remplacées ou retirées.

IEC Just Published - webstore.iec.ch/justpublished
Restez informé sur les nouvelles publications IEC. Just Published détaille les nouvelles publications parues. Disponible en ligne et une fois par mois par email.

Service Clients - webstore.iec.ch/csc
Si vous désirez nous donner des commentaires sur cette publication ou si vous avez des questions contactez-nous: sales@iec.ch.

IEC Products & Services Portal - products.iec.ch
Découvrez notre puissant moteur de recherche et consultez gratuitement tous les aperçus des publications, symboles graphiques et le glossaire. Avec un abonnement, vous aurez toujours accès à un contenu à jour adapté à vos besoins.

Electropedia - www.electropedia.org
Le premier dictionnaire d'électrotechnologie en ligne au monde, avec plus de 22 500 articles terminologiques en anglais et en français, ainsi que les termes équivalents dans 25 langues additionnelles. Egalement appelé Vocabulaire Electrotechnique International (IEV) en ligne.

AVA Documents
Document Sharing Hub

Full document details: IEC 61757-6-1-2024

IEC 61757-6-1

Edition 1.0 2024-01

INTERNATIONAL STANDARD

NORME INTERNATIONALE

Fibre optic sensors –
Part 6-1: Displacement measurement – Displacement sensors based on fibre Bragg gratings

Capteurs fibroniques –
Partie 6-1: Mesure de déplacement – Capteurs de déplacement basés sur des réseaux de Bragg sur fibre

INTERNATIONAL
ELECTROTECHNICAL
COMMISSION

COMMISSION
ELECTROTECHNIQUE
INTERNATIONALE

ICS 33.180.99

ISBN 978-2-8322-8134-5

Warning! Make sure that you obtained this publication from an authorized distributor.
Attention! Veuillez vous assurer que vous avez obtenu cette publication via un distributeur agréé.

® Registered trademark of the International Electrotechnical Commission
Marque déposée de la Commission Electrotechnique Internationale

Documents
Document Sharing Hub

Full document details: IEC 61757-6-1-2024

CONTENTS

FOREWORD 4
INTRODUCTION 6
1 Scope 7
2 Normative references 7
3 Terms, definitions, symbols and abbreviated terms 8
3.1 Terms and definitions 8
3.2 Symbols 9
3.3 Abbreviated terms 9
4 Structure and characteristics 9
4.1 Fibre Bragg grating (FBG) 9
4.2 FBG displacement sensor configuration 10
4.3 Reference wavelength 12
4.4 Stability behaviour 13
4.4.1 Drift and creep 13
4.4.2 Hysteresis 13
4.5 Indication of the measured values 13
4.6 Zero-point related measurement 14
4.7 Non-zero-point related measurement 14
4.8 Production set 14
4.9 FBG displacement sensor standard type 14
4.10 FBG displacement sensor series 14
5 Features and characteristics to be measured 14
5.1 Sampling and statistical evaluation 14
5.1.1 Sampling 14
5.1.2 Reporting the measuring result 15
5.1.3 Sample conditioning 15
5.1.4 Ambient test conditions 16
5.1.5 Required types of tests for individual characteristics 16
5.2 Bragg wavelength λ_B 16
5.2.1 General 16
5.2.2 Measurement procedure 16
5.2.3 Evaluation 16
5.2.4 Reporting 17
5.3 FBG spectral width 17
5.3.1 Measurement procedure 17
5.3.2 Evaluation 17
5.3.3 Reporting 17
5.4 FBG reflectivity 17
5.4.1 Measurement procedure 17
5.4.2 Evaluation 17
5.4.3 Reporting 18
5.5 Displacement measurement 18
5.5.1 General 18
5.5.2 Test setup 18
5.5.3 Measurement procedure 19
5.5.4 Calibration and evaluation 20

AVA Documents
Document Sharing Hub
Full document details: IEC 61757-6-1-2024

5.6 Displacement conversion factor 21
5.7 Temperature and humidity ranges 21
5.7.1 General 21
5.7.2 Measurement procedure 22
5.7.3 Evaluation 22
5.7.4 Reporting 22
5.8 Durability 22
5.8.1 General 22
5.8.2 Measurement procedure 22
5.8.3 Reporting 22
6 Features and characteristics to be reported 23
6.1 Construction details 23
6.2 Configuration of the FBG displacement sensor 23
6.3 Temperature and humidity range 23
6.4 Connecting requirement 23
7 Recommendations for use of FBG measuring instruments 23

Figure 1 – Examples of sensor types for measuring displacement changes 10
Figure 2 – Bragg wavelength change caused by displacement in a spring-type sensor 11
Figure 3 – Bragg wavelength changes caused by displacement in a metal-plate-type sensor 11
Figure 4 – Schematic diagrams of displacement sensors using two FBGs 12
Figure 5 – Schematic diagram of a displacement measurement test setup 18
Figure 6 – Example of temperature dependence of the Bragg wavelengths of two FBGs 19
Figure 7 – Example of displacement dependence of the Bragg wavelengths of FBG1 and FBG2 20

Table 1 – Required types of tests for individual characteristics 16

Documents
Document Sharing Hub
Full document details: IEC 61757-6-1-2024

INTERNATIONAL ELECTROTECHNICAL COMMISSION

FIBRE OPTIC SENSORS –

Part 6-1: Displacement measurement – Displacement sensors based on fibre Bragg gratings

FOREWORD

1) The International Electrotechnical Commission (IEC) is a worldwide organization for standardization comprising all national electrotechnical committees (IEC National Committees). The object of IEC is to promote international co-operation on all questions concerning standardization in the electrical and electronic fields. To this end and in addition to other activities, IEC publishes International Standards, Technical Specifications, Technical Reports, Publicly Available Specifications (PAS) and Guides (hereafter referred to as "IEC Publication(s)"). Their preparation is entrusted to technical committees; any IEC National Committee interested in the subject dealt with may participate in this preparatory work. International, governmental and non-governmental organizations liaising with the IEC also participate in this preparation. IEC collaborates closely with the International Organization for Standardization (ISO) in accordance with conditions determined by agreement between the two organizations.
2) The formal decisions or agreements of IEC on technical matters express, as nearly as possible, an international consensus of opinion on the relevant subjects since each technical committee has representation from all interested IEC National Committees.
3) IEC Publications have the form of recommendations for international use and are accepted by IEC National Committees in that sense. While all reasonable efforts are made to ensure that the technical content of IEC Publications is accurate, IEC cannot be held responsible for the way in which they are used or for any misinterpretation by any end user.
4) In order to promote international uniformity, IEC National Committees undertake to apply IEC Publications transparently to the maximum extent possible in their national and regional publications. Any divergence between any IEC Publication and the corresponding national or regional publication shall be clearly indicated in the latter.
5) IEC itself does not provide any attestation of conformity. Independent certification bodies provide conformity assessment services and, in some areas, access to IEC marks of conformity. IEC is not responsible for any services carried out by independent certification bodies.
6) All users should ensure that they have the latest edition of this publication.
7) No liability shall attach to IEC or its directors, employees, servants or agents including individual experts and members of its technical committees and IEC National Committees for any personal injury, property damage or other damage of any nature whatsoever, whether direct or indirect, or for costs (including legal fees) and expenses arising out of the publication, use of, or reliance upon, this IEC Publication or any other IEC Publications.
8) Attention is drawn to the Normative references cited in this publication. Use of the referenced publications is indispensable for the correct application of this publication.
9) IEC draws attention to the possibility that the implementation of this document may involve the use of (a) patent(s). IEC takes no position concerning the evidence, validity or applicability of any claimed patent rights in respect thereof. As of the date of publication of this document, IEC had not received notice of (a) patent(s), which may be required to implement this document. However, implementers are cautioned that this may not represent the latest information, which may be obtained from the patent database available at https://patents.iec.ch. IEC shall not be held responsible for identifying any or all such patent rights.

IEC 61757-6-1 has been prepared by subcommittee 86C: Fibre optic systems and active devices, of IEC technical committee 86: Fibre optics. It is an International Standard.

The text of this International Standard is based on the following documents:

Draft	Report on voting
86C/1874/CDV	86C/1891/RVC

Full information on the voting for its approval can be found in the report on voting indicated in the above table.

The language used for the development of this International Standard is English.

Documents
Document Sharing Hub

Full document details: IEC 61757-6-1-2024

This document was drafted in accordance with ISO/IEC Directives, Part 2, and developed in accordance with ISO/IEC Directives, Part 1 and ISO/IEC Directives, IEC Supplement, available at www.iec.ch/members_experts/refdocs. The main document types developed by IEC are described in greater detail at www.iec.ch/publications.

A list of all parts in the IEC 61757 series, published under the general title *Fibre optic sensors*, can be found on the IEC website.

The committee has decided that the contents of this document will remain unchanged until the stability date indicated on the IEC website under webstore.iec.ch in the data related to the specific document. At this date, the document will be

- reconfirmed,
- withdrawn, or
- revised.

Documents
Document Sharing Hub

Full document details: IEC 61757-6-1-2024

INTRODUCTION

This document is part of the IEC 61757 series, which is dedicated to fibre optic sensors. Generic specifications for fibre optic sensors are defined in IEC 61757.

The individual parts of the IEC 61757 series are numbered as IEC 61757-M-T, where M denotes the measure and T the technology. The IEC 61757-6-T series is concerned with displacement measurements.

Documents
Document Sharing Hub

Full document details: IEC 61757-6-1-2024

FIBRE OPTIC SENSORS –

Part 6-1: Displacement measurement – Displacement sensors based on fibre Bragg gratings

1 Scope

This part of IEC 61757 defines the terminology, structure, and measurement methods of optical displacement sensors based on fibre Bragg gratings (FBGs) as the sensing element. This document also specifies the most important features and characteristics of these fibre optic displacement sensors and defines procedures for measuring these features and characteristics.

2 Normative references

The following documents are referred to in the text in such a way that some or all of their content constitutes requirements of this document. For dated references, only the edition cited applies. For undated references, the latest edition of the referenced document (including any amendments) applies.

IEC 60068-2 (all parts), *Environmental testing – Part 2-X: Tests*

IEC 61300-2 (all parts), *Fibre optic interconnecting devices and passive components – Basic test and measurement procedures – Part 2-X: Tests*

IEC 61754 (all parts), *Fibre optic interconnecting devices and passive components – Fibre optic connector interfaces*

IEC 61757, *Fibre optic sensors – Generic specification*

IEC 61757-1-1:2020, *Fibre optic sensors – Part 1-1: Strain measurement – Strain sensors based on fibre Bragg gratings*

IEC 62129-1, *Calibration of wavelength/optical frequency measurement instruments – Part 1: Optical spectrum analyzers*

IEC 62129-2, *Calibration of wavelength/optical frequency measurement instruments – Part 2: Michelson interferometer single wavelength meters*

IEC 62129-3, *Calibration of wavelength/optical frequency measurement instruments – Part 3: Optical frequency meters internally referenced to a frequency comb*

ISO/IEC GUIDE 98-3, *Uncertainty of measurement – Part 3: Guide to the expression of uncertainty in measurement (GUM:1995)*

Documents
Document Sharing Hub

Full document details: IEC 61757-6-1-2024

3 Terms, definitions, symbols and abbreviated terms

3.1 Terms and definitions

For the purposes of this document, the terms and definitions given in IEC 61757, IEC 61757-1-1 and the following apply.

ISO and IEC maintain terminology databases for use in standardization at the following addresses:

- IEC Electropedia: available at https://www.electropedia.org/
- ISO Online browsing platform: available at https://www.iso.org/obp

3.1.1
displacement
D
distance change between two given points

Note 1 to entry: A displacement is designated as an absolute displacement if only one of the two given points changes its position.

Note 2 to entry: A displacement is designated as a relative displacement if both of the two given points change their position.

3.1.2
FBG displacement sensor
fibre optic sensor that uses one or more fibre Bragg gratings as a sensing element for displacement measurements

3.1.3
displacement conversion factor
κ_D
ratio of the relative change in wavelength $\Delta\lambda / \lambda_0$ to a displacement change ΔD introduced to an FBG displacement sensor

Note 1 to entry: The displacement conversion factor κ_D is calculated as

$$\kappa_D = \frac{\left(\frac{\Delta\lambda}{\lambda_0}\right)}{\Delta D}$$

Note 2 to entry: The displacement conversion factor κ_D is used by manufacturers to characterize the displacement response of their products.

Note 3 to entry: The conversion factor κ_D for an FBG displacement sensor assumes a linear relation between wavelength change and displacement. Considering the whole measurement system (sensor, device, and cabling), it can be separately defined for the components of the measurement system. It is only valid for defined conditions. In the case of a non-linear characteristic, the relation between wavelength change and displacement is considered to be linear within a defined permissible measurement error.

Note 4 to entry: The term displacement sensitivity, expressed for example in pm/mm, is used by some manufacturers to characterize the displacement response of their products.

Documents
Document Sharing Hub
Full document details: IEC 61757-6-1-2024

3.1.4
temperature compensation constant
C
constant for correcting the influence of temperature changes when the displacement is obtained from wavelength changes

Note 1 to entry: The temperature compensation constant should be provided by the manufacturer.

Note 2 to entry: The term temperature sensitivity, expressed for example in (pm/°C), is used by some manufacturers to characterize the influence of temperature changes of their products.

3.2 Symbols

For the purposes of this document, the following symbols apply:

R_{FBG} reflectivity of the FBG

n_{eff} effective refractive index of the FBG

ΔD displacement change

ΔT temperature change

Λ FBG period

λ_B Bragg wavelength

λ_0 reference wavelength

3.3 Abbreviated terms

FBG fibre Bragg grating

FWHM full width at half maximum

SNR signal-to-noise ratio

UV ultraviolet

4 Structure and characteristics

4.1 Fibre Bragg grating (FBG)

Fibre Bragg gratings are phase diffraction gratings inscribed into optical waveguides. They are frequently produced using ultraviolet (UV) light (e.g. from an excimer laser at 248 nm). The fibre is exposed to an interference pattern of this UV radiation. UV photosensitive processes then produce changes in the refractive index of the fibre core, which is susceptible to this UV light. The interference pattern is imaged onto the fibre core to permanently change the refractive index of the fibre core, so that the refractive index varies periodically along the fibre. Incident and transported light is reflected by these periodic refractive index changes along the fibre. At a certain wavelength, the reflected light is additively superimposed (constructive interference); this spectral part of the incident light is reflected back to the input port of the fibre. In the transmitted light, this wavelength (denoted Bragg wavelength λ_B) is attenuated accordingly, due to the FBG reflectivity.

The value of the reflected Bragg wavelength λ_B is determined by the Bragg condition shown in Formula (1).

$$\lambda_B = 2 n_{eff} \Lambda \tag{1}$$

Documents
Document Sharing Hub
Full document details: IEC 61757-6-1-2024

According to Formula (1), the Bragg wavelength λ_B of the FBG depends on the effective refractive index n_{eff} of the FBG and on the FBG period Λ. The spectral width of the Bragg wavelength peak is determined by the number of grating periods and the magnitude of the refractive index modulation (see IEC 61757-1-1:2020, 5.1).

4.2 FBG displacement sensor configuration

The FBG displacement sensor can be fabricated from various materials and in various forms (using one or more FBGs as sensing elements). The FBG displacement sensor is typically used to monitor the displacement occurring between two points of different objects, or between two parts of the same object. One example is monitoring of displacement changes at expansion joints that are installed in bridges to prevent damage to the structure; these joints contract and expand due to temperature changes. Another example of detecting displacement changes is monitoring of crack size changes in structures where cracks have occurred.

The method used to convert a displacement change into a change of the Bragg wavelength of an FBG depends on the manufacturer of the displacement sensor. There are a variety of methods, but a comprehensive description of these methods is outside the scope of this document.

As an example, the FBG displacement sensor can be configured so that the movement of a stylus (which is the displacement sensing part) by means of a mechanical transducer causes a corresponding strain change in the FBG, as shown in Figure 1 for a spring-type sensor and for a metal-plate-type sensor. This strain change in the FBG then changes the reflected Bragg wavelength of the FBG, as shown in Figure 2 and Figure 3. Hence, the displacement can be determined by measuring the reflected Bragg wavelength of the FBG.

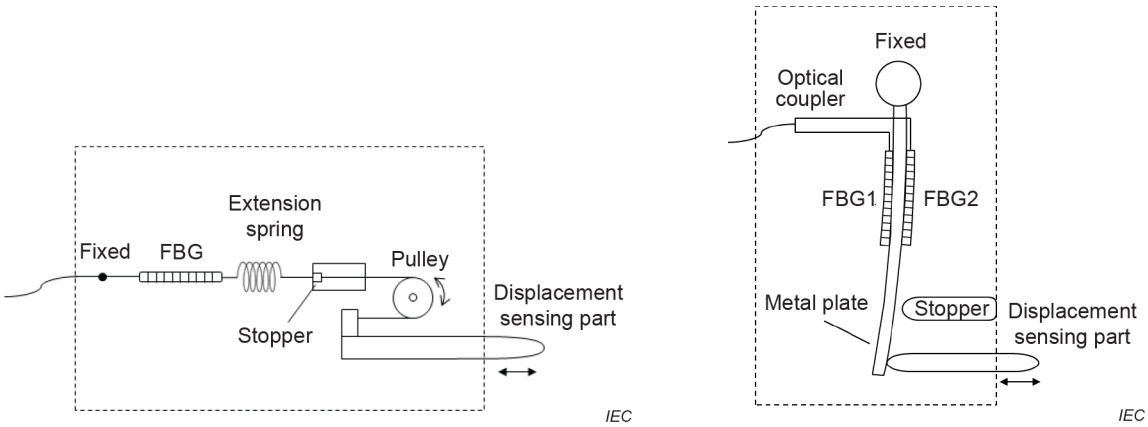

a) Spring type **b) Metal plate type**

Figure 1 – Examples of sensor types for measuring displacement changes

In the spring-type sensor shown in Figure 1 a), a displacement change causes a pulley to rotate, which changes the length of a tensile spring that is attached to an FBG. The resulting change in the tensile force applied to the FBG causes a strain change in the FBG, which in turn changes the reflective wavelength of the FBG, as illustrated in Figure 2 a) and Figure 2 b). When installing the FBG displacement sensor shown in Figure 2 a), the stopper is often placed near the centre of the expected displacement changes, so that positive as well as negative displacement changes can be detected. If displacement changes are expected to occur in only one direction, a larger change in displacement can be measured by placing the stopper more towards the left or right side.

Documents
Document Sharing Hub
Full document details: IEC 61757-6-1-2024

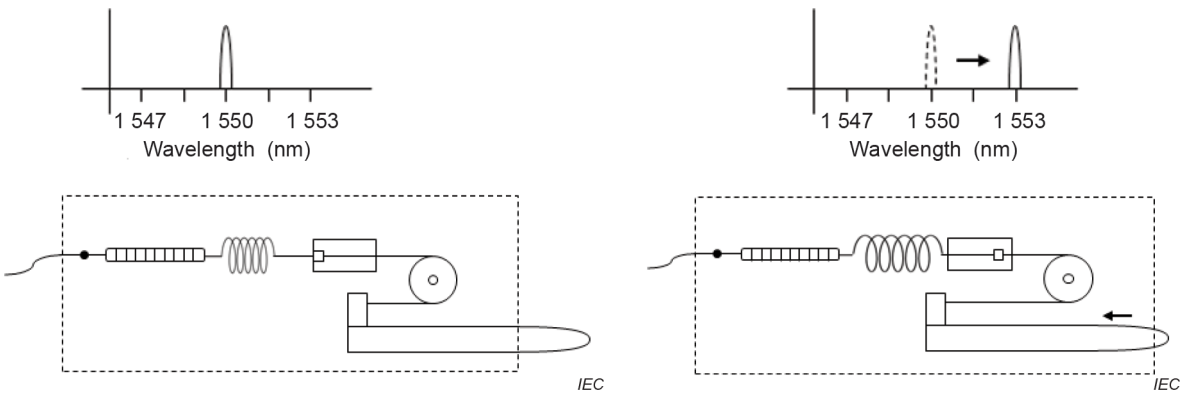

a) No displacement change

b) With wavelength and displacement change

Figure 2 – Bragg wavelength change caused by displacement in a spring-type sensor

In the metal-plate-type sensor shown in Figure 1 b), a change in displacement causes an elastic metal plate to bend. The change in the shape of the metal plate is detected by two FBGs, denoted FBG1 and FBG2, which are attached to both sides of the metal plate, as shown in Figure 3 a). When the displacement-measuring stylus moves from its original position to the left direction, the elastic metal plate bends further to the left, which causes a contraction of FBG1 and an expansion of FBG2. Since the contraction of FBG1 results in increased stress and the expansion of FBG2 in increased strain, the displacement changes the reflective Bragg wavelengths of the two FBGs in opposite directions, as shown in Figure 3 b).

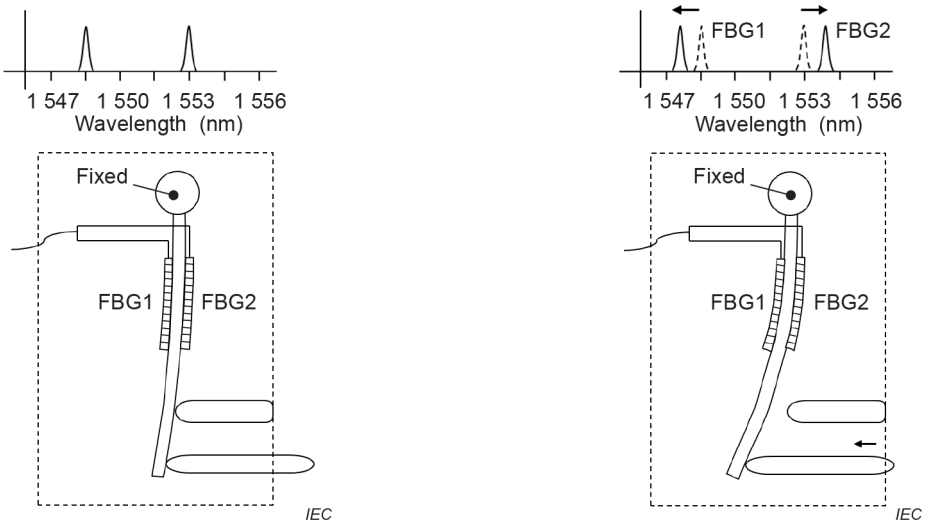

a) No displacement change

b) With wavelength and displacement change

Figure 3 – Bragg wavelength changes caused by displacement in a metal-plate-type sensor

A broadband light source and an optical spectrometer can be used to measure the change in the Bragg wavelength of an FBG. The light source and the spectrometer are typically connected to the displacement sensing FBG via an optical circulator, as shown schematically in Figure 4 for the spring-type and the metal-plate-type sensors.

Documents
Document Sharing Hub
Full document details: IEC 61757-6-1-2024

In the spring-type sensor shown in Figure 4 a), an additional FBG (denoted FBG1) is inserted near the displacement sensing FBG (denoted FBG2) to allow for compensation of the temperature dependence of FBG2 (as described in 5.5.3). The additional FBG1 measures only temperature changes, whereas FBG2 measures displacement and temperature changes. FBG1 and FBG2 can be connected in series, as shown in Figure 4 a), or in parallel, like in the arrangement shown in Figure 4 b).

The metal-plate-type sensor shown in Figure 4 b) employs two FBGs for the displacement measurement. An additional FBG for temperature measurement is not necessary in this arrangement, because the displacement change is calculated from the differential change in the reflected wavelengths of FBG1 and FBG2. If the Bragg wavelength variations due to temperature changes are identical in both FBGs, the temperature dependence of the Bragg wavelength is automatically compensated.

The metal-plate-type sensor of Figure 4 b) uses an optical coupler with 3 dB splitting ratio to connect FBG1 and FBG2 to the broadband light source and spectrometer.

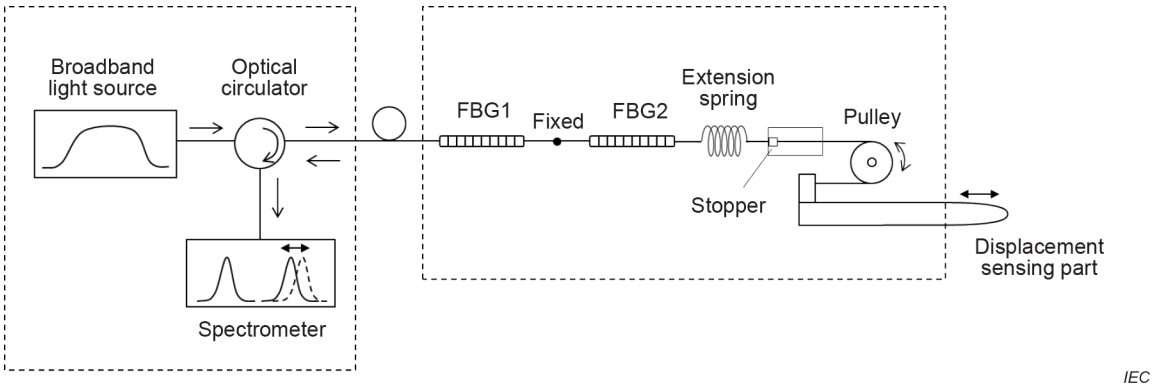

a) Spring type with additional FBG for temperature measurement

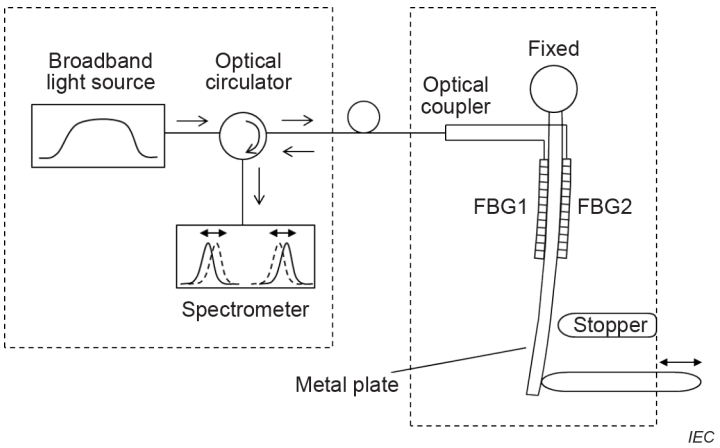

b) Metal plate type using two FBGs for displacement measurement

Figure 4 – Schematic diagrams of displacement sensors using two FBGs

4.3 Reference wavelength

The Bragg wavelength measured with a given FBG can depend on the evaluation method used and, more importantly, on the specific installation of the FBG. In the context of this document, the wavelength measured after installation of the FBG in the displacement sensor is denoted as the reference wavelength λ_0

Documents
Document Sharing Hub
Full document details: IEC 61757-6-1-2024

The reference wavelength is not necessarily the same as the Bragg wavelength specified by the manufacturer of the FBG. If the FBG is pre-strained, for example, there is a difference between the reference wavelength and the manufacturer's Bragg wavelength. If the FBG is not pre-strained, the difference between the reference wavelength and the manufacturer's Bragg wavelength is usually very small, so that both wavelength values can be used interchangeably without significant error.

If the reference wavelength is measured when the measurement cycle is started, this wavelength measurement may be considered as the zero-point measurement value.

4.4 Stability behaviour

4.4.1 Drift and creep

Stability, in general, is the ability of a measurement system to maintain its metrological characteristics and to meet other specifications over the intended time of operation. In the context of this document, stability describes the property of the applied FBG displacement sensor to maintain its optical characteristics over the time period of use, which is determined by the application, or to show only small permissible deviations.

Variations in the measured value can occur when:

– the materials concerned are subject to long-term stress (creep),
– no loading stress is applied (zero-point drift).

Creep and zero-point drift can result from slowly progressing chemical or physical degradation of the materials used in the sensor (e.g. from ageing), or from changes of the initial environmental conditions (e.g. either temperature or humidity, or both).

Creep is a quantity that depends on the materials used in the sensor, the set-up of the sensor, and the type of operation. It can only be determined experimentally. Provided that the bonding material prescribed by the manufacturer is used, the measurement errors resulting from creep are usually insignificant compared to the measurement uncertainty of the displacement conversion factor κ_D.

Drift is a slow change of the metrological characteristics of the measurement system. For state-of-the-art FBG sensors, the measurement error resulting from drift is negligibly small. In this case, no further specification of drift is required. However, if drifts are generated in a modified production process, for example, or by applying inadequate recoating materials, the drift should be stated.

4.4.2 Hysteresis

Hysteresis describes a particular material behaviour, whereby the material does not return to its original state, or does so with a significant time delay, after the input load has been removed. This means that the output value of a sensor with elasto-plastic deformation behaviour does not only depend on the input value but also on rate-dependent processes.

When the displacement (or temperature) of a silica-based FBG changes, the Bragg wavelength commonly shifts without showing a hysteresis effect. If hysteresis occurs for repeated or cyclic displacement variations within the specified operation range of the sensor, the amount of hysteresis should be described.

4.5 Indication of the measured values

The variations in Bragg wavelength induced in the FBG are measured by a connected measuring device (yielding the measured values) and processed for metrological use (yielding the result of the measurement). Customarily, the measuring device supplies the optical input signal for the sensor and records the sensor response signal.

AVA Documents
Document Sharing Hub
Full document details: IEC 61757-6-1-2024

4.6 Zero-point related measurement

The concepts of "zero-point measurement" and "static or quasi-static measurement", respectively, are used to denote all measurements where the measured value refers to an initial value (the zero point).

The following influencing factors shall also be considered:

– drift in the measuring instrument;
– method of evaluation:

  different evaluation methods (using different measuring devices) can result in different offset quantities with respect to the zero point. In case of replacement of the measuring device, the zero-point offset between the old and the new instrument should be determined correspondingly;
– creep of the applied sensor.

The scanning procedure of the FBG displacement sensors shall take place in a route-neutral manner, so that the characteristics of the connecting leads and of the optical connectors or splices do not affect the zero point. Nevertheless, intermittent zero-point checking is recommended.

4.7 Non-zero-point related measurement

For non-zero-point related or periodic dynamic measurements, the measured values are not referred to a fixed initial value. This applies, for example, to the amplitude measurement of a periodic oscillation.

4.8 Production set

An FBG set is a batch of FBG produced in the same manufacturing process.

4.9 FBG displacement sensor standard type

An FBG displacement sensor standard type is a batch of FBG displacement sensors with identical physical properties (geometrical dimensions, manufacturing process, materials used, post-processing, and Bragg wavelength).

4.10 FBG displacement sensor series

A series is a batch of FBG displacement sensors for which the materials used, and the manufacturing processes are identical, but which can show differences in their Bragg wavelength or dimensions.

5 Features and characteristics to be measured

5.1 Sampling and statistical evaluation

5.1.1 Sampling

5.1.1.1 General

The following sampling methods shall be used according to the intended scope of testing:

– random sampling;
– type testing;
– series testing;
– individual sample testing.

Documents
Document Sharing Hub

Full document details: IEC 61757-6-1-2024