IEC 61760-3

Edition 2.0 2021-02

INTERNATIONAL STANDARD

NORME INTERNATIONALE

Surface mounting technology – Part 3: Standard method for the specification of components for through-hole reflow (THR) soldering

Technique du montage en surface – Partie 3: Méthode normalisée relative à la spécification des composants pour le brasage par refusion à trous traversants (THR, Through Hole Reflow)

IEC 61760-3:2021-02(en-fr)

Documents
Document Sharing Hub
Full document details: IEC 61760-3-2021

THIS PUBLICATION IS COPYRIGHT PROTECTED
Copyright © 2021 IEC, Geneva, Switzerland

All rights reserved. Unless otherwise specified, no part of this publication may be reproduced or utilized in any form or by any means, electronic or mechanical, including photocopying and microfilm, without permission in writing from either IEC or IEC's member National Committee in the country of the requester. If you have any questions about IEC copyright or have an enquiry about obtaining additional rights to this publication, please contact the address below or your local IEC member National Committee for further information.

Droits de reproduction réservés. Sauf indication contraire, aucune partie de cette publication ne peut être reproduite ni utilisée sous quelque forme que ce soit et par aucun procédé, électronique ou mécanique, y compris la photocopie et les microfilms, sans l'accord écrit de l'IEC ou du Comité national de l'IEC du pays du demandeur. Si vous avez des questions sur le copyright de l'IEC ou si vous désirez obtenir des droits supplémentaires sur cette publication, utilisez les coordonnées ci-après ou contactez le Comité national de l'IEC de votre pays de résidence.

IEC Central Office
3, rue de Varembé
CH-1211 Geneva 20
Switzerland

Tel.: +41 22 919 02 11
info@iec.ch
www.iec.ch

About the IEC
The International Electrotechnical Commission (IEC) is the leading global organization that prepares and publishes International Standards for all electrical, electronic and related technologies.

About IEC publications
The technical content of IEC publications is kept under constant review by the IEC. Please make sure that you have the latest edition, a corrigendum or an amendment might have been published.

IEC publications search - webstore.iec.ch/advsearchform
The advanced search enables to find IEC publications by a variety of criteria (reference number, text, technical committee, …). It also gives information on projects, replaced and withdrawn publications.

IEC Just Published - webstore.iec.ch/justpublished
Stay up to date on all new IEC publications. Just Published details all new publications released. Available online and once a month by email.

IEC Customer Service Centre - webstore.iec.ch/csc
If you wish to give us your feedback on this publication or need further assistance, please contact the Customer Service Centre: sales@iec.ch.

IEC online collection - oc.iec.ch
Discover our powerful search engine and read freely all the publications previews. With a subscription you will always have access to up to date content tailored to your needs.

Electropedia - www.electropedia.org
The world's leading online dictionary on electrotechnology, containing more than 22 000 terminological entries in English and French, with equivalent terms in 18 additional languages. Also known as the International Electrotechnical Vocabulary (IEV) online.

A propos de l'IEC
La Commission Electrotechnique Internationale (IEC) est la première organisation mondiale qui élabore et publie des Normes internationales pour tout ce qui a trait à l'électricité, à l'électronique et aux technologies apparentées.

A propos des publications IEC
Le contenu technique des publications IEC est constamment revu. Veuillez vous assurer que vous possédez l'édition la plus récente, un corrigendum ou amendement peut avoir été publié.

Recherche de publications IEC - webstore.iec.ch/advsearchform
La recherche avancée permet de trouver des publications IEC en utilisant différents critères (numéro de référence, texte, comité d'études, …). Elle donne aussi des informations sur les projets et les publications remplacées ou retirées.

IEC Just Published - webstore.iec.ch/justpublished
Restez informé sur les nouvelles publications IEC. Just Published détaille les nouvelles publications parues. Disponible en ligne et une fois par mois par email.

Service Clients - webstore.iec.ch/csc
Si vous désirez nous donner des commentaires sur cette publication ou si vous avez des questions contactez-nous: sales@iec.ch.

IEC online collection - oc.iec.ch
Découvrez notre puissant moteur de recherche et consultez gratuitement tous les aperçus des publications. Avec un abonnement, vous aurez toujours accès à un contenu à jour adapté à vos besoins.

Electropedia - www.electropedia.org
Le premier dictionnaire d'électrotechnologie en ligne au monde, avec plus de 22 000 articles terminologiques en anglais et en français, ainsi que les termes équivalents dans 16 langues additionnelles. Egalement appelé Vocabulaire Electrotechnique International (IEV) en ligne.

AVA Documents
Document Sharing Hub

Full document details: IEC 61760-3-2021

IEC 61760-3

Edition 2.0 2021-02

INTERNATIONAL STANDARD

NORME INTERNATIONALE

Surface mounting technology – Part 3: Standard method for the specification of components for through-hole reflow (THR) soldering

Technique du montage en surface – Partie 3: Méthode normalisée relative à la spécification des composants pour le brasage par refusion à trous traversants (THR, Through Hole Reflow)

INTERNATIONAL ELECTROTECHNICAL COMMISSION

COMMISSION ELECTROTECHNIQUE INTERNATIONALE

ICS 31.190

ISBN 978-2-8322-9294-5

Warning! Make sure that you obtained this publication from an authorized distributor.
Attention! Veuillez vous assurer que vous avez obtenu cette publication via un distributeur agréé.

® Registered trademark of the International Electrotechnical Commission
Marque déposée de la Commission Electrotechnique Internationale

Documents
Document Sharing Hub

Full document details: IEC 61760-3-2021

CONTENTS

FOREWORD 4
1 Scope 6
2 Normative references 6
3 Terms and definitions 7
4 Requirements to component design and component specifications 9
4.1 General requirement 9
4.2 Packaging 9
4.3 Labelling of component packaging 10
4.4 Component marking 10
4.5 Storage and transportation 10
4.6 Component outline and design 10
4.6.1 Drawing and specification 10
4.6.2 Requirement of pick-up area 11
4.6.3 Component tilt 13
4.6.4 Bottom surface requirements 13
4.6.5 Terminal requirements 14
4.6.6 Optical recognition 19
4.6.7 Component height 19
4.6.8 Component mass 20
4.7 Mechanical stress 20
4.8 Component reliability 20
4.9 Additional requirements for compatibility with lead-free soldering 20
5 Typical process conditions for THR soldering process 20
5.1 Mounting by through-hole reflow soldering 20
5.2 Solder paste supply 21
5.3 Component insertion 22
5.4 Reflow soldering methods (recommended) 22
5.5 Cleaning 23
5.5.1 General 23
5.5.2 Cleaning medium and cleaning method 23
5.5.3 Cleaning process conditions 23
5.6 Removal and/or replacement of soldered components 24
6 Relevant tests and requirements for components and component specifications for THR soldering process 24
6.1 General 24
6.2 Wettability 25
6.3 Dewetting 25
6.4 Resistance to soldering heat 25
6.5 Resistance to cleaning solvent 25
6.5.1 General 25
6.5.2 Solvent resistance of component 26
6.5.3 Solvent resistance of marking 26
6.6 Soldering profile 26
6.7 Moisture sensitivity level 26
7 Quality criteria for THR soldering 26
Annex A (informative) Flux creeping-up and solder wicking 27

AVA Documents
Document Sharing Hub

Bibliography 28

Figure 1 – Example of a component with marked specific orientation put in tape and tray 9
Figure 2 – Example of components in a tape 10
Figure 3 – Pick-up area 12
Figure 4 – Chuck jaw 12
Figure 5 – Component side flat surface 13
Figure 6 – Component top flat surface 13
Figure 7 – Clearance 14
Figure 8 – Stand-off height 14
Figure 9 – Terminal length and protrusion length 15
Figure 10 – Terminal position tolerance 0,2 mm 16
Figure 11 – Terminal position tolerance 0,4 mm 17
Figure 12 – Terminal shape 18
Figure 13 – Solder wetting 19
Figure 14 – Typical soldering process steps 21
Figure 15 – Solder paste supply 22
Figure A.1 – Example of the flux creeping-up 27
Figure A.2 – Example of the solder wicking 27

Table 1 – Typical cleaning conditions 24

Documents
Document Sharing Hub

Full document details: IEC 61760-3-2021

INTERNATIONAL ELECTROTECHNICAL COMMISSION

SURFACE MOUNTING TECHNOLOGY –

Part 3: Standard method for the specification of components for through-hole reflow (THR) soldering

FOREWORD

1) The International Electrotechnical Commission (IEC) is a worldwide organization for standardization comprising all national electrotechnical committees (IEC National Committees). The object of IEC is to promote international co-operation on all questions concerning standardization in the electrical and electronic fields. To this end and in addition to other activities, IEC publishes International Standards, Technical Specifications, Technical Reports, Publicly Available Specifications (PAS) and Guides (hereafter referred to as "IEC Publication(s)"). Their preparation is entrusted to technical committees; any IEC National Committee interested in the subject dealt with may participate in this preparatory work. International, governmental and non-governmental organizations liaising with the IEC also participate in this preparation. IEC collaborates closely with the International Organization for Standardization (ISO) in accordance with conditions determined by agreement between the two organizations.
2) The formal decisions or agreements of IEC on technical matters express, as nearly as possible, an international consensus of opinion on the relevant subjects since each technical committee has representation from all interested IEC National Committees.
3) IEC Publications have the form of recommendations for international use and are accepted by IEC National Committees in that sense. While all reasonable efforts are made to ensure that the technical content of IEC Publications is accurate, IEC cannot be held responsible for the way in which they are used or for any misinterpretation by any end user.
4) In order to promote international uniformity, IEC National Committees undertake to apply IEC Publications transparently to the maximum extent possible in their national and regional publications. Any divergence between any IEC Publication and the corresponding national or regional publication shall be clearly indicated in the latter.
5) IEC itself does not provide any attestation of conformity. Independent certification bodies provide conformity assessment services and, in some areas, access to IEC marks of conformity. IEC is not responsible for any services carried out by independent certification bodies.
6) All users should ensure that they have the latest edition of this publication.
7) No liability shall attach to IEC or its directors, employees, servants or agents including individual experts and members of its technical committees and IEC National Committees for any personal injury, property damage or other damage of any nature whatsoever, whether direct or indirect, or for costs (including legal fees) and expenses arising out of the publication, use of, or reliance upon, this IEC Publication or any other IEC Publications.
8) Attention is drawn to the Normative references cited in this publication. Use of the referenced publications is indispensable for the correct application of this publication.
9) Attention is drawn to the possibility that some of the elements of this IEC Publication may be the subject of patent rights. IEC shall not be held responsible for identifying any or all such patent rights.

IEC 61760-3 has been prepared by IEC technical committee 91: Electronics assembly technology. It is an International Standard.

This second edition cancels and replaces the first edition published in 2010. This edition constitutes a technical revision.

This edition includes the following significant technical changes with respect to the previous edition:

a) change position tolerance requirement (0,4 mm maximum to between 0,2 mm and 0,4 mm);
b) introduce through-hole vacant method as a solder paste supply method.

Documents
Document Sharing Hub
Full document details: IEC 61760-3-2021

The text of this International Standard is based on the following documents:

Draft	Report on voting
91/1684/FDIS	91/1702/RVD

Full information on the voting for its approval can be found in the report on voting indicated in the above table.

The language used for the development of this International Standard is English.

This document was drafted in accordance with ISO/IEC Directives, Part 2, and developed in accordance with ISO/IEC Directives, Part 1 and ISO/IEC Directives, IEC Supplement, available at www.iec.ch/members_experts/refdocs. The main document types developed by IEC are described in greater detail at www.iec.ch/standardsdev/publications.

A list of all parts in the IEC 61760 series, published under the general title *Surface mounting technology*, can be found on the IEC website.

The committee has decided that the contents of this document will remain unchanged until the stability date indicated on the IEC website under webstore.iec.ch in the data related to the specific document. At this date, the document will be

- reconfirmed,
- withdrawn,
- replaced by a revised edition, or
- amended.

Documents
Document Sharing Hub

Full document details: IEC 61760-3-2021

SURFACE MOUNTING TECHNOLOGY –

Part 3: Standard method for the specification of components for through-hole reflow (THR) soldering

1 Scope

This part of IEC 61760 gives a reference set of requirements, process conditions and related test conditions to be used when compiling specifications of electronic components that are intended for usage in through-hole reflow soldering technology.

The object of this document is to ensure that components with leads intended for through-hole reflow and surface mounting components can be subjected to the same placement and mounting processes. Hereto, this document defines test and requirements that need to be part of any component generic, sectional or detail specification, when through-hole reflow soldering is intended.

Furthermore, this document provides component users and manufacturers with a reference set of typical process conditions used in through-hole reflow soldering technology.

2 Normative references

The following documents are referred to in the text in such a way that some or all of their content constitutes requirements of this document. For dated references, only the edition cited applies. For undated references, the latest edition of the referenced document (including any amendments) applies.

IEC 60068 (all parts), *Environmental testing*

IEC 60068-2-20:2008, *Environmental testing – Part 2-20: Tests – Test T: Test methods for solderability and resistance to soldering heat of devices with leads*

IEC 60068-2-21, *Environmental testing – Part 2-21: Tests – Test U: Robustness of terminations and integral mounting devices*

IEC 60068-2-45:1980, *Basic environmental testing procedures – Part 2-45: Tests – Test XA and guidance: Immersion in cleaning solvents*
IEC 60068-2-45:1980/AMD1:1993

IEC 60068-2-58, *Environmental testing – Part 2-58: Tests – Test Td: Test methods for solderability, resistance to dissolution of metallization and to soldering heat of surface mounting devices (SMD)*

IEC 60068-2-77[1], *Environmental testing – Part 2-77: Tests – Test 77: Body strength and impact shock*

IEC 60194-1, *Printed boards design, manufacture and assembly – Vocabulary – Part 1: Common usage in printed board and electronic assembly technologies*

[1] To be integrated into the seventh edition of IEC 60068-2-21.
Stage at the time of publication: IEC/AFDIS 60068-2-21:2021.

Documents
Document Sharing Hub

Full document details: IEC 61760-3-2021

IEC 60286 (all parts), *Packaging of components for automatic handling*

IEC 60286-3, *Packaging of components for automatic handling – Part 3: Packaging of surface mount components on continuous tapes*

IEC 60286-4, *Packaging of components for automatic handling – Part 4: Stick magazines for electronic components encapsulated in packages of different forms*

IEC 60286-5, *Packaging of components for automatic handling – Part 5: Matrix trays*

IEC 60749-20, *Semiconductor devices – Mechanical and climatic test methods – Part 20: Resistance of plastic encapsulated SMDs to the combined effect of moisture and soldering heat*

IEC 61188-6-4, *Printed boards and printed board assemblies – Design and use – Part 6-4: Land pattern design – Generic requirements for dimensional drawings of surface mounted components (SMD) from the viewpoint of land pattern design*

IEC 61191-3, *Printed board assemblies – Part 3: Sectional specification – Requirements for through-hole mount soldered assemblies*

IEC 61760-1:2020, *Surface mounting technology – Part 1: Standard method for the specification of surface mounting components (SMDs)*

IEC 61760-2, *Surface mounting technology – Part 2: Transportation and storage conditions of surface mounting devices (SMD) – Application guide*

IEC 61760-4:2015, *Surface mounting technology – Part 4: Classification, packaging, labelling and handling of moisture sensitive devices*

IPC/JEDEC J-STD-020, *Moisture/Reflow Sensitivity Classification for Non-hermetic Solid State Surface Mount Devices*

IPC-A-610G, *Acceptability of Electronic Assemblies*

3 Terms and definitions

For the purposes of this document, the terms and definitions given in IEC 60194-1 and the following apply.

ISO and IEC maintain terminological databases for use in standardization at the following addresses:

- IEC Electropedia: available at http://www.electropedia.org/
- ISO Online browsing platform: available at https://www.iso.org/obp

3.1
through-hole reflow
THR
reflow soldering process for electronic component terminals inserted into the through-hole of the circuit board

3.2
THR components
through-hole reflow components
electronic components with leads which are intended to be subject to through-hole reflow soldering

AVA Documents
Document Sharing Hub

Full document details: IEC 61760-3-2021

3.3
vacuum nozzle
pipette
type of tooling for component to pick-up and place the component with vacuum

3.4
chuck
gripper
type of tooling for component transfer

3.5
chucking
gripping
motion of the *chuck* (3.4) to hold the components

3.6
pick-up area
component surface area for vacuum suction or chucking to transfer within pick and place machine

3.7
cavity of packaging
depression area to place component in taping or tray

3.8
stand-off
protrusion(s) from the component body which are used to make a space between the component body and the seating plane

Note 1 to entry: Stand-off prevents the component touching the solder paste.

3.9
clearance
space to avoid contact between component body and solder paste and to ensure sufficient heat transfer to soldering regions

3.10
auxiliary terminal
protrusion which has no electrical function inserted into a circuit board

3.11
stencil
stencil foil
thin sheet of material containing openings to reflect a specific pattern, designed to transfer solder paste like material to a circuit board for the purpose of component attachment

[SOURCE: IEC 60194-1:2021, 3.19.187, modified – The words " paste-like material " have been replaced by "solder paste like material" and “substrate” has been replaced by “circuit board”.]

3.12
A side
circuit board surface to which THR components (3.2) are to be mounted

3.13
B side
reverse surface of A side (3.12)

Documents
Document Sharing Hub
Full document details: IEC 61760-3-2021

3.14
solder wicking
capillary movement of solder between metal surfaces, such as strands of wire

[SOURCE: IEC 60194-1:2021, 3.19.125]

4 Requirements to component design and component specifications

4.1 General requirement

The component specification for THR components (hereinafter, referred to as component specification) shall specify the requirements specified in 4.2 through 4.9 and Clause 6.

4.2 Packaging

Packaging for THR components shall be in accordance with IEC 60286-3, IEC 60286-4 and IEC 60286-5.

The component specification shall specify the following:

– Protection of THR components during transportation and storage;
– Moisture absorption control; if needed, follow the moisture sensitivity level (MSL) according to IEC 61760-4, IEC 60749-20 or IPC/JEDEC J-STD-020 (see 6.7);
– Polarity or pin 1 indication (see Figure 1);
– Orientation of the component in the packaging (see Figure 2).

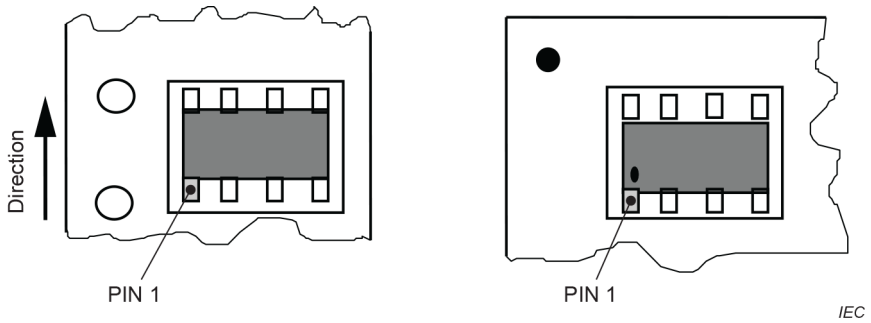

Figure 1 – Example of a component with marked specific orientation put in tape and tray

Documents
Document Sharing Hub
Full document details: IEC 61760-3-2021

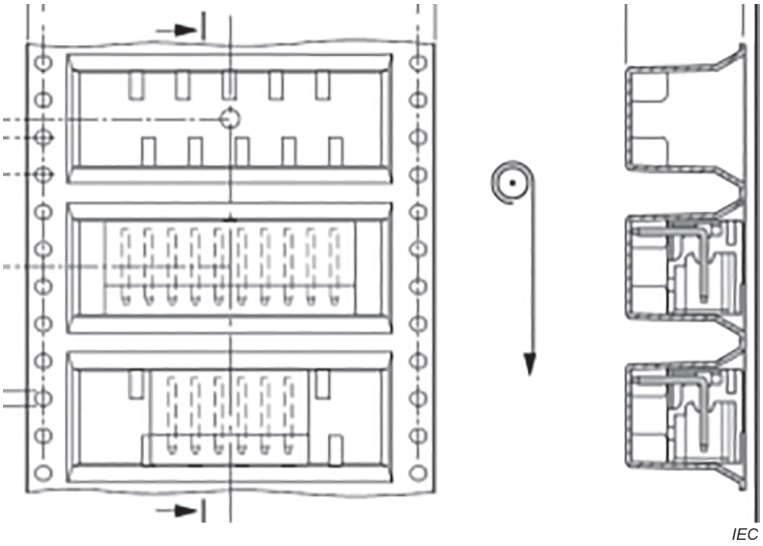

Figure 2 – Example of components in a tape

4.3 Labelling of component packaging

Labelling of the component packaging should comply with IEC 62090.

NOTE The following items are particularly important.

– item identification (e.g. customer part number or manufacturer part number or both);

– quantity;

– traceability identification (e.g. batch number or serial number).

4.4 Component marking

The marking on the component shall be specified in the component specification.

4.5 Storage and transportation

Component specification shall refer to storage and transportation conditions of IEC 61760-2.

4.6 Component outline and design

4.6.1 Drawing and specification

Drawings, including bottom-view, top-view and side-view drawings, of the component showing all dimensions and tolerances of its body and terminals shall be part of the component specification. The drawing shall include reference to the positioning of the component body and terminals on the mounting land pattern. If conductive surfaces are not planar, their three-dimensional geometry shall be clearly specified with the relevant tolerances.

In any 2D drawing or 3D data, conductive parts/surfaces and insulating parts/surfaces shall be clearly distinguished, at least for bottom and sides of components, as well as for movable parts. This requirement applies both to the disassembled and the assembled condition for parts requiring a final assembly step after mounting on a substrate (e.g. if a connector contains spring-loaded retainers, which change their position/angle upon mating). The locations and dimensions of conductive parts/surfaces shall be specified even if they are not intended for establishing a contact with the mounting surface, e.g. punched or sawn surfaces consisting of unplated leadframe resulting from component singulation for molded semiconductor packages.

Documents
Document Sharing Hub
Full document details: IEC 61760-3-2021

Component drawing and component specification shall specify in particular the following information:

– Dimensions and tolerances according to 4.6.4, 4.6.5.1 and 4.6.5.2;
– Dimensional drawings of footprint design. The generic requirements for dimensional drawings of SMDs from viewpoint of land-pattern design as specified in IEC 61188-6-4 shall be adopted for surface-mount devices;
– Locations of metal parts which contact to the circuit board surface.

The manufacturer of a THR component shall consider that the design and material selection can lead to a possible expansion or deformation of the component in the reflow process. The manufacturer shall provide an appropriate recommendation for mounting including a footprint recommendation.

4.6.2 Requirement of pick-up area

4.6.2.1 General requirement

Design of the component shall be in such a way, that it is possible to hold the component by vacuum nozzle or mechanical chuck and transfer it to the exact placement position on the circuit board. It shall be possible to create a vacuum or mechanical force strong enough to hold the component in its position under the vacuum nozzle or chuck. During the total transfer process, which may include optical inspection, the component shall remain exactly in its position under the vacuum nozzle or chuck, until the component is placed.

The centre of the suction area shall match the centre of gravity (major requirement) and the geometrical centre (minor requirement).

NOTE Assembly manufacturer considers mounting by vacuum nozzle first. If a vacuum nozzle is not available, then chuck will be selected.

4.6.2.2 Vacuum nozzle mounting

Vacuum nozzle mounting shall be in accordance with IEC 61760-1.

In the case of mounting or inserting the component by using vacuum nozzle, the following matters shall be considered and, when necessary, clarified between the manufacturer and the user of the component:

– The pick-up area shall be on top of the component;
– The pick-up area shall be appropriately secured depending on the mass of the component;

  NOTE See 4.6.8 for the relation between area of vacuum nozzles and mass of components.

– If a suitable pick-up area is not ensured, then sticky tape or caps (see Figure 3) shall be used;
– Sticky tape or caps shall not fall off during and after reflow soldering;
– The centre of the pick-up area should match the component centre of gravity. Unless the component dose not tilt, the geometrical centre may be used.

Documents
Document Sharing Hub
Full document details: IEC 61760-3-2021

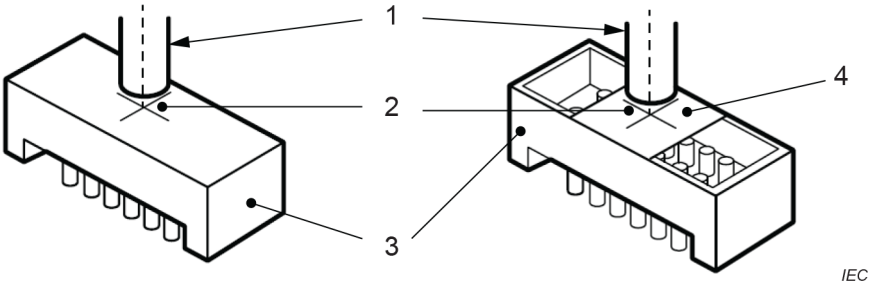

Key

1 vacuum nozzle

2 pick-up area

3 component body

4 sticky tape

Figure 3 – Pick-up area

4.6.2.3 Chuck mounting

In the case of mounting or inserting the component using a chuck, an agreement between manufacturer and user is necessary considering the following matters:

– There shall be enough gap between the component and the cavity of packaging (see Figure 4);

– Components shall have flat surface on sides for chucking (see Figure 5);

– Components shall have flat surface on top which make the component fixed while chucking (see Figure 6);

– It is desirable to reduce rattling between the component and the cavity.

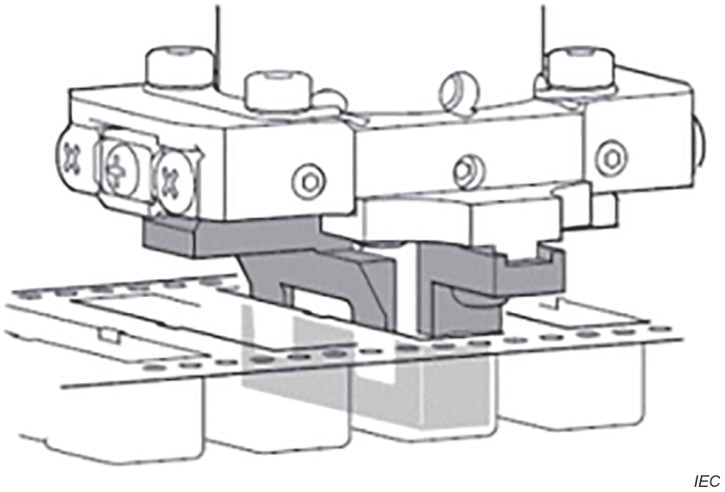

Chuck jaws are shown in hatched.

Figure 4 – Chuck jaw

Documents
Document Sharing Hub
Full document details: IEC 61760-3-2021

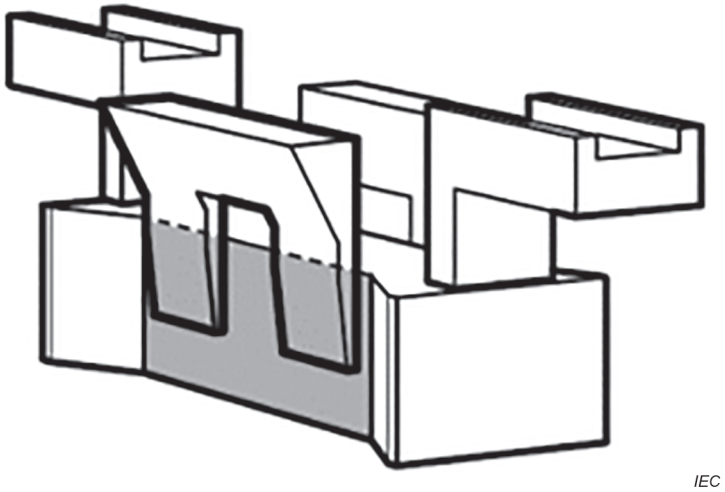

Component side flat surface are shown hatched.

Figure 5 – Component side flat surface

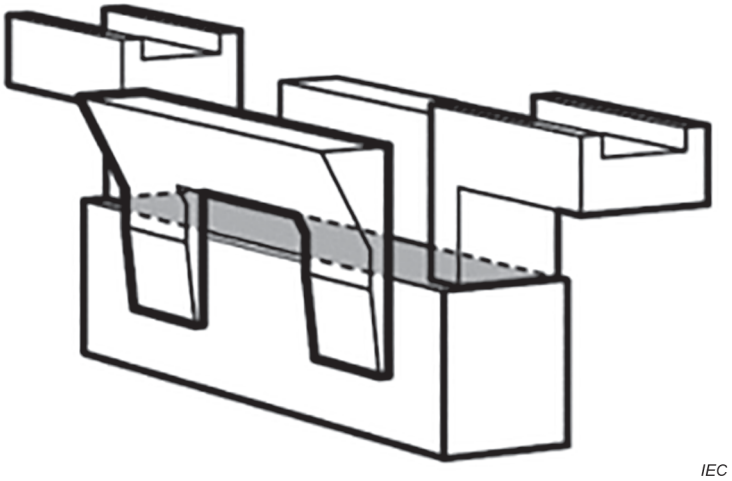

Component top flat surface is shown hatched.

Figure 6 – Component top flat surface

4.6.3 Component tilt

The components shall be self-sustaining when the component is inserted into a circuit board and the component body comes into contact with the circuit board. The components should not be designed to incline taking into account the centre of the gravity of the components. If a component tilt is not avoidable due to the component structure, a retention mechanism to prevent the tilting should be considered.

4.6.4 Bottom surface requirements

Sufficient clearances shall be considered to avoid contact between component body and solder paste and to ensure sufficient heat transfer to soldering regions (see Figure 7).

To ensure sufficient clearances, the components shall have a stand-off height of 0,5 mm or more and should not contact with the circuit board except for terminals and stand-off (see Figure 8).

Documents
Document Sharing Hub

Full document details: IEC 61760-3-2021

In addition, the components shall be designed to avoid creeping up of flux and solder wicking (see Annex A).

When designing the clearance of a component, the amount of solder paste to be supplied needs to be adapted.

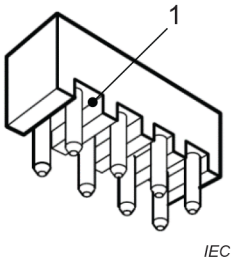

Key

1 clearance

Bottom side of the connector

Figure 7 – Clearance

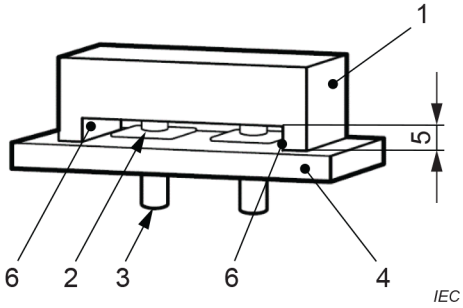

Key

1 component body

2 solder

3 terminal

4 circuit board

5 stand-off height

6 stand-off

Figure 8 – Stand-off height

4.6.5 Terminal requirements

4.6.5.1 Terminal length

The terminal length of the component shall be the length at which the terminal protrudes from the B side of the circuit board in order to improve the visibility in visual inspection, the ease of judgment in the image inspection equipment after reflow soldering, and to ensure the solder joint strength (see Figure 9). The recommended protrusion length is 0,5 mm minimum and the terminal length should be depending upon the circuit board thickness.

Other dimensions shall be discussed between the user and the supplier of the component.

Documents
Document Sharing Hub
Full document details: IEC 61760-3-2021

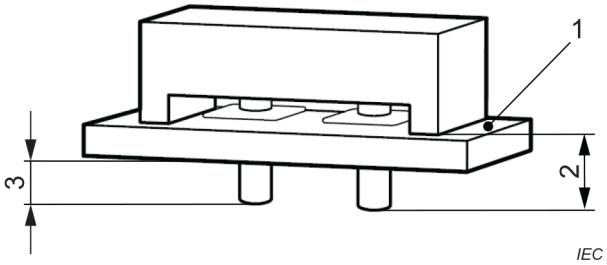

Key

1 seating plane

2 terminal length from seating plane to the tip of terminal.

3 protrusion length

Figure 9 – Terminal length and protrusion length

4.6.5.2 Terminal position tolerance

The position tolerance of each pin tip should be specified to a value between 0,2 mm and 0,4 mm in diameter (see Figure 10 and Figure 11).

For any protrusion which is to be inserted into the circuit board such as an auxiliary terminal, the same position tolerance should apply.

If the location of the terminals does not fall within the recommended tolerance, or when a specific requirement shall apply, the manufacturer and the user of the components should be consulted.

NOTE A smaller position tolerance of the component terminals is expected, because of the tolerance that is determined by the hole diameter and hole position tolerance of the circuit board, the positioning accuracy of the placement equipment that will insert the device, the required supply amount of the solder paste and the maximum traveling distance to the land at the time of the solder paste reflow.

Documents
Document Sharing Hub
Full document details: IEC 61760-3-2021

Dimensions in millimetres

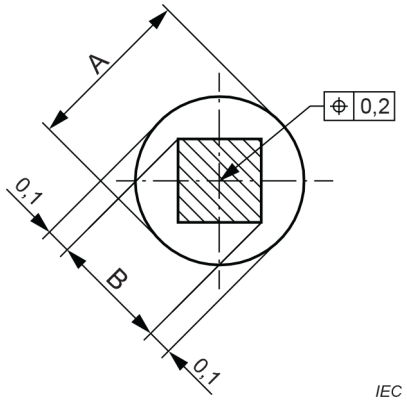

Version A
Square pin

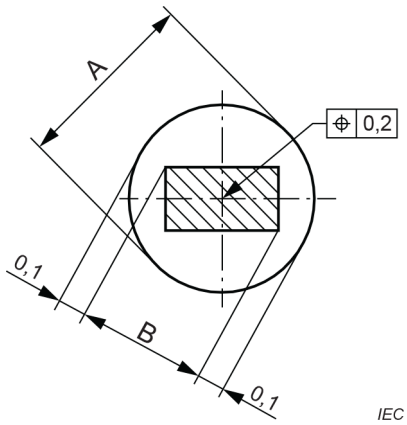

Version B
Rectangular pin

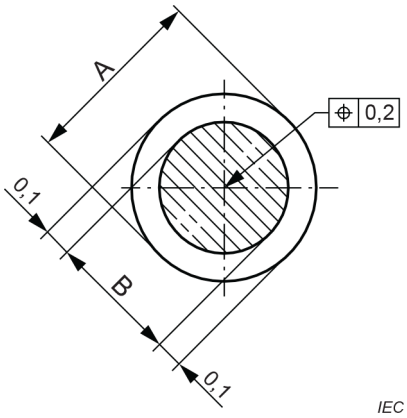

Version C
Round pin

Key

A hole in gauge

B diameter of pin

Figure 10 – Terminal position tolerance 0,2 mm

Documents
Document Sharing Hub

Full document details: IEC 61760-3-2021

Dimensions in millimetres

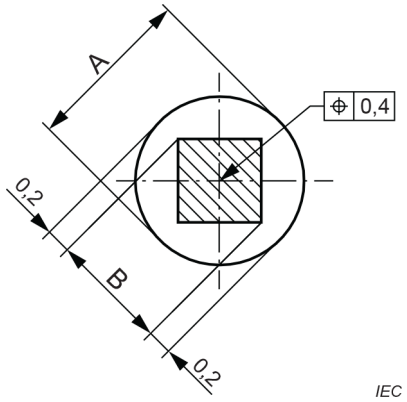

Version A
Square pin

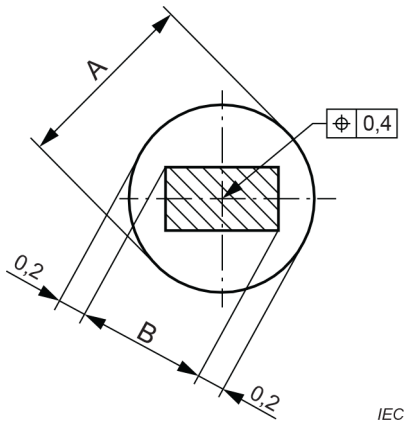

Version B
Rectangular pin

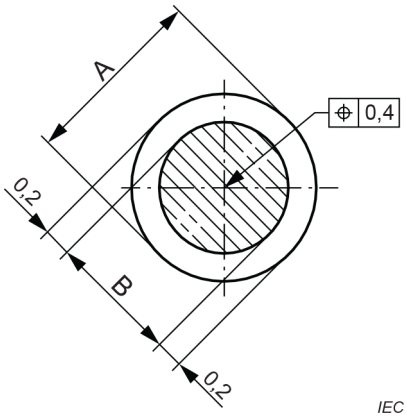

Version C
Round pin

Key

A hole in gauge

B diameter of pin

Figure 11 – Terminal position tolerance 0,4 mm

Documents
Document Sharing Hub

Full document details: IEC 61760-3-2021