IEC 61784-2-14

Edition 1.0 2023-05

INTERNATIONAL STANDARD

NORME INTERNATIONALE

Industrial networks – Profiles – Part 2-14: Additional real-time fieldbus profiles based on ISO/IEC/IEEE 8802-3 – CPF 14

Réseaux industriels – Profils – Partie 2-14: Profils de bus de terrain supplémentaires pour les réseaux en temps réel fondés sur l'ISO/IEC/IEEE 8802-3 – CPF 14

IEC 61784-2-14:2023-05(en-fr)

Documents
Document Sharing Hub
Full document details: IEC 61784-2-14-2023

THIS PUBLICATION IS COPYRIGHT PROTECTED
Copyright © 2023 IEC, Geneva, Switzerland

All rights reserved. Unless otherwise specified, no part of this publication may be reproduced or utilized in any form or by any means, electronic or mechanical, including photocopying and microfilm, without permission in writing from either IEC or IEC's member National Committee in the country of the requester. If you have any questions about IEC copyright or have an enquiry about obtaining additional rights to this publication, please contact the address below or your local IEC member National Committee for further information.

Droits de reproduction réservés. Sauf indication contraire, aucune partie de cette publication ne peut être reproduite ni utilisée sous quelque forme que ce soit et par aucun procédé, électronique ou mécanique, y compris la photocopie et les microfilms, sans l'accord écrit de l'IEC ou du Comité national de l'IEC du pays du demandeur. Si vous avez des questions sur le copyright de l'IEC ou si vous désirez obtenir des droits supplémentaires sur cette publication, utilisez les coordonnées ci-après ou contactez le Comité national de l'IEC de votre pays de résidence.

IEC Secretariat
3, rue de Varembé
CH-1211 Geneva 20
Switzerland

Tel.: +41 22 919 02 11
info@iec.ch
www.iec.ch

About the IEC
The International Electrotechnical Commission (IEC) is the leading global organization that prepares and publishes International Standards for all electrical, electronic and related technologies.

About IEC publications
The technical content of IEC publications is kept under constant review by the IEC. Please make sure that you have the latest edition, a corrigendum or an amendment might have been published.

IEC publications search - webstore.iec.ch/advsearchform
The advanced search enables to find IEC publications by a variety of criteria (reference number, text, technical committee, …). It also gives information on projects, replaced and withdrawn publications.

IEC Just Published - webstore.iec.ch/justpublished
Stay up to date on all new IEC publications. Just Published details all new publications released. Available online and once a month by email.

IEC Customer Service Centre - webstore.iec.ch/csc
If you wish to give us your feedback on this publication or need further assistance, please contact the Customer Service Centre: sales@iec.ch.

IEC Products & Services Portal - products.iec.ch
Discover our powerful search engine and read freely all the publications previews. With a subscription you will always have access to up to date content tailored to your needs.

Electropedia - www.electropedia.org
The world's leading online dictionary on electrotechnology, containing more than 22 300 terminological entries in English and French, with equivalent terms in 19 additional languages. Also known as the International Electrotechnical Vocabulary (IEV) online.

A propos de l'IEC
La Commission Electrotechnique Internationale (IEC) est la première organisation mondiale qui élabore et publie des Normes internationales pour tout ce qui a trait à l'électricité, à l'électronique et aux technologies apparentées.

A propos des publications IEC
Le contenu technique des publications IEC est constamment revu. Veuillez vous assurer que vous possédez l'édition la plus récente, un corrigendum ou amendement peut avoir été publié.

Recherche de publications IEC - webstore.iec.ch/advsearchform
La recherche avancée permet de trouver des publications IEC en utilisant différents critères (numéro de référence, texte, comité d'études, …). Elle donne aussi des informations sur les projets et les publications remplacées ou retirées.

IEC Just Published - webstore.iec.ch/justpublished
Restez informé sur les nouvelles publications IEC. Just Published détaille les nouvelles publications parues. Disponible en ligne et une fois par mois par email.

Service Clients - webstore.iec.ch/csc
Si vous désirez nous donner des commentaires sur cette publication ou si vous avez des questions contactez-nous: sales@iec.ch.

IEC Products & Services Portal - products.iec.ch
Découvrez notre puissant moteur de recherche et consultez gratuitement tous les aperçus des publications. Avec un abonnement, vous aurez toujours accès à un contenu à jour adapté à vos besoins.

Electropedia - www.electropedia.org
Le premier dictionnaire d'électrotechnologie en ligne au monde, avec plus de 22 300 articles terminologiques en anglais et en français, ainsi que les termes équivalents dans 19 langues additionnelles. Egalement appelé Vocabulaire Electrotechnique International (IEV) en ligne.

Documents
Document Sharing Hub

Full document details: IEC 61784-2-14-2023

IEC 61784-2-14

Edition 1.0 2023-05

INTERNATIONAL STANDARD

NORME INTERNATIONALE

Industrial networks – Profiles – Part 2-14: Additional real-time fieldbus profiles based on ISO/IEC/IEEE 8802-3 – CPF 14

Réseaux industriels – Profils – Partie 2-14: Profils de bus de terrain supplémentaires pour les réseaux en temps réel fondés sur l'ISO/IEC/IEEE 8802-3 – CPF 14

INTERNATIONAL
ELECTROTECHNICAL
COMMISSION

COMMISSION
ELECTROTECHNIQUE
INTERNATIONALE

ICS 35.100.20; 35.240.50

ISBN 978-2-8322-6903-9

Warning! Make sure that you obtained this publication from an authorized distributor.
Attention! Veuillez vous assurer que vous avez obtenu cette publication via un distributeur agréé.

® Registered trademark of the International Electrotechnical Commission
Marque déposée de la Commission Electrotechnique Internationale

Documents
Document Sharing Hub

Full document details: IEC 61784-2-14-2023

CONTENTS

FOREWORD 4
INTRODUCTION 6
1 Scope 7
2 Normative references 7
3 Terms, definitions, abbreviated terms, acronyms, and conventions 8
3.1 Terms and definitions 8
3.2 Abbreviated terms and acronyms 9
3.3 Symbols 9
3.4 Conventions 10
4 CPF 14 (EPA) – RTE communication profiles 11
4.1 General overview 11
4.2 CPF 14 (EPA) communication concept 11
4.2.1 General 11
4.2.2 Network Topology 11
4.2.3 EPA devices 12
4.3 CP 14/1 13
4.3.1 Physical layer 13
4.3.2 Data-link layer 13
4.3.3 Network Layer 13
4.3.4 Transport Layer 13
4.3.5 Application layer 13
4.3.6 Performance indicator selection 14
4.4 CP 14/2 18
4.4.1 Physical layer 18
4.4.2 Data-link layer 18
4.4.3 Network Layer 19
4.4.4 Transport Layer 19
4.4.5 Application layer 19
4.4.6 Performance indicator selection 20
4.5 CP 14/3 23
4.5.1 Physical layer 23
4.5.2 Data-link layer 23
4.5.3 Network Layer 24
4.5.4 Transport Layer 24
4.5.5 Application layer 24
4.5.6 Performance indicator selection 25
4.6 CP 14/4 29
4.6.1 Physical layer 29
4.6.2 Data-link layer 29
4.6.3 Network layer 30
4.6.4 Transport layer 31
4.6.5 Application layer 31
4.6.6 Performance indicator selection 32
Bibliography 35

Figure 1 – EPA system network topology example 12

AVA Documents
Document Sharing Hub

Full document details: IEC 61784-2-14-2023

Table 1 – CPF 14 symbols 10
Table 2 – CP 14/1: AL service selection 14
Table 3 – CP 14/1: AL protocol selection 14
Table 4 – CP 14/1: PI overview 15
Table 5 – CP 14/1: PI dependency matrix 15
Table 6 – CP 14/1: Consistent set of PIs 17
Table 7 – CP 14/2: DLL service selection 18
Table 8 – CP 14/2: DLL protocol selection 18
Table 9 – CP 14/2: AL service selection 19
Table 10 – CP 14/2: AL protocol selection 20
Table 11 – CP 14/2: PI overview 20
Table 12 – CP 14/2: PI dependency matrix 21
Table 13 – CP 14/2: Consistent set of PIs 23
Table 14 – CP 14/3: DLL service selection 23
Table 15 – CP 14/3: DLL protocol selection 24
Table 16 – CP 14/3: AL service selection 24
Table 17 – CP 14/3: AL protocol selection 25
Table 18 – CP 14/3: PI overview 25
Table 19 – CP 14/3: PI dependency matrix 26
Table 20 – CP 14/3: Consistent set of PIs 28
Table 21 – CP 14/3: Consistent set of PIs 29
Table 22 – CP 14/3: Consistent set of PIs 29
Table 23 – CP 14/4: DLL service selection 30
Table 24 – CP 14/4: DLL protocol selection 30
Table 25 – CP 14/4: AL service selection 31
Table 26 – CP 14/4: AL protocol selection 31
Table 27 – CP 14/4: PI overview 32
Table 28 – CP 14/4: PI dependency matrix 32
Table 29 – CP 14/4: Consistent set of PIs 34

Documents
Document Sharing Hub
Full document details: IEC 61784-2-14-2023

INTERNATIONAL ELECTROTECHNICAL COMMISSION

INDUSTRIAL NETWORKS – PROFILES –

Part 2-14: Additional real-time fieldbus profiles based on ISO/IEC/IEEE 8802-3 – CPF 14

FOREWORD

1) The International Electrotechnical Commission (IEC) is a worldwide organization for standardization comprising all national electrotechnical committees (IEC National Committees). The object of IEC is to promote international co-operation on all questions concerning standardization in the electrical and electronic fields. To this end and in addition to other activities, IEC publishes International Standards, Technical Specifications, Technical Reports, Publicly Available Specifications (PAS) and Guides (hereafter referred to as "IEC Publication(s)"). Their preparation is entrusted to technical committees; any IEC National Committee interested in the subject dealt with may participate in this preparatory work. International, governmental and non-governmental organizations liaising with the IEC also participate in this preparation. IEC collaborates closely with the International Organization for Standardization (ISO) in accordance with conditions determined by agreement between the two organizations.
2) The formal decisions or agreements of IEC on technical matters express, as nearly as possible, an international consensus of opinion on the relevant subjects since each technical committee has representation from all interested IEC National Committees.
3) IEC Publications have the form of recommendations for international use and are accepted by IEC National Committees in that sense. While all reasonable efforts are made to ensure that the technical content of IEC Publications is accurate, IEC cannot be held responsible for the way in which they are used or for any misinterpretation by any end user.
4) In order to promote international uniformity, IEC National Committees undertake to apply IEC Publications transparently to the maximum extent possible in their national and regional publications. Any divergence between any IEC Publication and the corresponding national or regional publication shall be clearly indicated in the latter.
5) IEC itself does not provide any attestation of conformity. Independent certification bodies provide conformity assessment services and, in some areas, access to IEC marks of conformity. IEC is not responsible for any services carried out by independent certification bodies.
6) All users should ensure that they have the latest edition of this publication.
7) No liability shall attach to IEC or its directors, employees, servants or agents including individual experts and members of its technical committees and IEC National Committees for any personal injury, property damage or other damage of any nature whatsoever, whether direct or indirect, or for costs (including legal fees) and expenses arising out of the publication, use of, or reliance upon, this IEC Publication or any other IEC Publications.
8) Attention is drawn to the Normative references cited in this publication. Use of the referenced publications is indispensable for the correct application of this publication.
9) Attention is drawn to the possibility that some of the elements of this IEC Publication may be the subject of patent rights. IEC shall not be held responsible for identifying any or all such patent rights.

Attention is drawn to the fact that the use of some of the associated protocol types is restricted by their intellectual-property-right holders. In all cases, the commitment to limited release of intellectual-property-rights made by the holders of those rights permits a layer protocol type to be used with other layer protocols of the same type, or in other type combinations explicitly authorized by their respective intellectual property right holders.

NOTE Combinations of protocol types are specified in the IEC 61784-1 series and the IEC 61784-2 series.

IEC 61784-2-14 has been prepared by subcommittee 65C: Industrial networks, of IEC technical committee 65: Industrial-process measurement, control and automation. It is an International Standard.

This first edition, together with the other parts of the same series, cancels and replaces the fourth edition of IEC 61784-2 published in 2019. This first edition constitutes a technical revision.

AVA Documents
Document Sharing Hub

Full document details: IEC 61784-2-14-2023

This edition includes the following significant technical changes with respect to IEC 61784-2:2019:

a) split of the original IEC 61784-2 into several subparts, one subpart for the material of a generic nature, and one subpart for each Communication Profile Family specified in the original document.

The text of this International Standard is based on the following documents:

Draft	Report on voting
65C/1209/FDIS	65C/1237/RVD

Full information on the voting for its approval can be found in the report on voting indicated in the above table.

The language used for the development of this International Standard is English.

This document was drafted in accordance with ISO/IEC Directives, Part 2, and developed in accordance with ISO/IEC Directives, Part 1 and ISO/IEC Directives, IEC Supplement, available at www.iec.ch/members_experts/refdocs. The main document types developed by IEC are described in greater detail at www.iec.ch/publications.

A list of all parts of the IEC 61784-2 series, published under the general title *Industrial networks – Profiles – Part 2: Additional real-time fieldbus profiles based on ISO/IEC/IEEE 8802-3*, can be found on the IEC website.

The committee has decided that the contents of this document will remain unchanged until the stability date indicated on the IEC website under webstore.iec.ch in the data related to the specific document. At this date, the document will be

- reconfirmed,
- withdrawn,
- replaced by a revised edition, or
- amended.

Documents
Document Sharing Hub

Full document details: IEC 61784-2-14-2023

INTRODUCTION

The IEC 61784-2 series provides additional Communication Profiles (CP) to the existing Communication Profile Families (CPF) of the IEC 61784-1 series and additional CPFs with one or more CPs. These profiles meet the industrial automation market objective of identifying Real-Time Ethernet (RTE) communication networks coexisting with ISO/IEC/IEEE 8802-3 – commonly known as Ethernet. These RTE communication networks use provisions of ISO/IEC/IEEE 8802-3 for the lower communication stack layers and additionally provide more predictable and reliable real-time data transfer and means for support of precise synchronization of automation equipment.

More specifically, these profiles help to correctly state the compliance of RTE communication networks with ISO/IEC/IEEE 8802-3, and to avoid the spreading of divergent implementations.

Adoption of Ethernet technology for industrial communication between controllers and even for communication with field devices promotes the use of Internet technologies in the field area. This availability would be unacceptable if it causes the loss of features required in the field area for industrial communication automation networks, such as:

- real-time,
- synchronized actions between field devices like drives,
- efficient, frequent exchange of very small data records.

These new RTE profiles can take advantage of the improvements of Ethernet networks in terms of transmission bandwidth and network span.

Another implicit but essential requirement is that the typical Ethernet communication capabilities, as used in the office world, are fully retained, so that the software involved remains applicable.

The market is in need of several network solutions, each with different performance characteristics and functional capabilities, matching the diverse application requirements. RTE performance indicators, whose values will be provided with RTE devices based on communication profiles specified in the IEC 61784-2 series, enable the user to match network devices with application-dependent performance requirements of an RTE network.

Documents
Document Sharing Hub
Full document details: IEC 61784-2-14-2023

INDUSTRIAL NETWORKS – PROFILES –

Part 2-14: Additional real-time fieldbus profiles based on ISO/IEC/IEEE 8802-3 – CPF 14

1 Scope

This part of IEC 61784-2 defines Communication Profile Family 14 (CPF 14). CPF 14 specifies a set of Real-Time Ethernet (RTE) communication profiles (CPs) and related network components based on the IEC 61158 series (Type 14), ISO/IEC/IEEE 8802-3 and other standards.

For each RTE communication profile, this document also specifies the relevant RTE performance indicators and the dependencies between these RTE performance indicators.

NOTE 1 All CPs are based on standards or draft standards or International Standards published by the IEC or on standards or International Standards established by other standards bodies or open standards processes.

NOTE 2 The RTE communication profiles use ISO/IEC/IEEE 8802-3 communication networks and its related network components or IEC 61588 and in some cases amend those standards to obtain RTE features.

2 Normative references

The following documents are referred to in the text in such a way that some or all of their content constitutes requirements of this document. For dated references, only the edition cited applies. For undated references, the latest edition of the referenced document (including any amendments) applies.

NOTE All parts of the IEC 61158 series, as well as the IEC 61784-1 series and the IEC 61784-2 series, are maintained simultaneously. Cross-references to these documents within the text therefore refer to the editions as dated in this list of normative references.

IEC 61158 (all parts), *Industrial communication networks – Fieldbus specifications*

IEC 61158-3-14:2014, *Industrial communication networks – Fieldbus specifications – Part 3-14: Data-link layer service definition – Type 14 elements*

IEC 61158-4-14:2014, *Industrial communication networks – Fieldbus specifications – Part 4-14: Data-link layer protocol specification – Type 14 elements*

IEC 61158-5-14:2014, *Industrial communication networks – Fieldbus specifications – Part 5-14: Application layer service definition – Type 14 elements*

IEC 61158-6-14:2014, *Industrial communication networks – Fieldbus specifications – Part 6-14: Application layer protocol specification – Type 14 elements*

IEC 61588, *Precision clock synchronization protocol for networked measurement and control systems*

IEC 61784-2-0:2023, *Industrial networks – Profiles – Part 2-0: Additional real-time fieldbus profiles based on ISO/IEC/IEEE 8802-3 – General concepts and terminology*

Documents
Document Sharing Hub

Full document details: IEC 61784-2-14-2023

ISO/IEC/IEEE 8802-3, *Telecommunications and exchange between information technology systems – Requirements for local and metropolitan area networks – Part 3: Standard for Ethernet*

ISO/IEC/IEEE 8802-11, *Information technology – Telecommunications and information exchange between systems – Local and metropolitan area networks – Specific requirements – Part 11: Wireless LAN medium access control (MAC) and physical layer (PHY) specifications*

IEEE Std 802-2014, *IEEE Standard for Local and Metropolitan Area Networks: Overview and Architecture*

IEEE Std 802.1AB-2016, *IEEE Standard for Local and metropolitan area networks – Station and Media Access Control Connectivity Discovery*

IEEE Std 802.1AS-2020, *IEEE Standard for Local and Metropolitan Area Networks – Timing and Synchronization for Time-Sensitive Applications*

IEEE Std 802.1Q-2018, *IEEE Standard for Local and Metropolitan Area Networks – Bridges and Bridged Networks*

IEEE Std 802.15.1-2005, *IEEE Standard for Information technology – Local and metropolitan area networks – Specific requirements – Part 15.1a: Wireless Medium Access Control (MAC) and Physical Layer (PHY) specifications for Wireless Personal Area Networks (WPAN)*

IETF RFC 768, J. Postel, *User Datagram Protocol*, August 1980, available at https://www.rfc-editor.org/info/rfc768 [viewed 2022-02-18]

IETF RFC 791, J. Postel, *Internet Protocol*, September 1981, available at https://www.rfc-editor.org/info/rfc791 [viewed 2022-02-18]

IETF RFC 792, J. Postel, *Internet Control Message Protocol*, September 1981, available at https://www.rfc-editor.org/info/rfc792 [viewed 2022-02-18]

IETF RFC 793, J. Postel, *Transmission Control Protocol*, September 1981, available at https://www.rfc-editor.org/info/rfc793 [viewed 2022-02-18]

IETF RFC 826, D. Plummer, *An Ethernet Address Resolution Protocol: Or Converting Network Protocol Addresses to 48.bit Ethernet Address for Transmission on Ethernet Hardware*, November 1982, available at https://www.rfc-editor.org/info/rfc826 [viewed 2022-02-18]

3 Terms, definitions, abbreviated terms, acronyms, and conventions

3.1 Terms and definitions

For the purposes of this document, the terms and definitions given in IEC 61784-2-0, ISO/IEC/IEEE 8802-3, IEEE Std 802-2014, IEEE Std 802.1AB-2016, IEEE Std 802.1AS-2020 and IEEE Std 802.1Q-2018 apply.

ISO and IEC maintain terminological databases for use in standardization at the following addresses:

- IEC Electropedia: available at https://www.electropedia.org/
- ISO Online browsing platform: available at https://www.iso.org/obp

Documents
Document Sharing Hub

Full document details: IEC 61784-2-14-2023

3.2 Abbreviated terms and acronyms

For the purposes of this document, abbreviated terms and acronyms defined in IEC 61784-2-0 and the following apply.

ARP Address Resolution Protocol (see IETF RFC 826)

CP Communication Profile [according to IEC 61784-1-0]

CPF Communication Profile Family [according to IEC 61784-1-0]

ICMP Internet Control Message Protocol (see IETF RFC 792)

IETF Internet Engineering Task Force

IP Internet Protocol (see IETF RFC 791)

LLDP Link Layer Discovery Protocol (see IEEE Std 802.1AB-2016)

n.a. Not applicable

NoS Number of Switches

Phy PHY Physical layer entity sublayer (see ISO/IEC/IEEE 8802-3)

PI Performance indicator

PTP Precision Time Protocol (see IEC 61588)

RSTP Rapid Spanning Tree Algorithm and Protocol (see IEEE Std 802.1Q-2018)

TCP Transmission Control Protocol (see IETF RFC 793)

UDP User Datagram Protocol (see IETF RFC 768)

3.3 Symbols

For the purposes of this document, symbols defined in IEC 61784-2-0 and Table 1 apply.

NOTE Definitions of symbols in this Subclause 3.3 do not use the italic font, as they are already identified as symbols.

Documents
Document Sharing Hub

Full document details: IEC 61784-2-14-2023

Table 1 – CPF 14 symbols

Symbol	Definition	Unit
DT	Delivery time	µs
D_size	Data size	octets
L_{Cable}	Cable length	m
N_{data}	Length of complete Ethernet frame	octets
NRTE_BW	Non-RTE bandwidth	%
N_{Switch}	Number of switches between end-stations	
RateofEthernet	Ethernet data rate	Mbit/s
RMData	Redundancy management data	octets
RTEData	Real-time data	octets
T_{Stack_R}	Receiver stack processing time including Phy and MAC	µs
T_{Cable}	Cable delay	µs
TD_Sw	Time delay in switch	µs
$T_{Ethernet_S}$	Sender traversal time through MAC and Phy based on ISO/IEC/IEEE 8802-3	µs
ThroughputRTE	RTE throughput	octets/s
T_{Queue_S}	Sender queuing delay	µs
TSData	Time synchronization data	octets
T_{Stack_S}	Sender stack processing time	µs
T_{Switch}	Switch delay	µs
T_{Trf_S}	Transfer time for one octet	µs
T_wire	Time per octet on a wire segment	µs
STT_s	Stack traversal time of the sender	µs
STT_r	Stack traversal time of the receiver	µs

3.4 Conventions

For the purposes of this document, the conventions defined in IEC 61784-2-0 apply.

Documents
Document Sharing Hub
Full document details: IEC 61784-2-14-2023

4 CPF 14 (EPA[1]) – RTE communication profiles

4.1 General overview

Communication Profile Family 14 (CPF 14) defines communication profiles based on IEC 61158-3-14, IEC 61158-4-14, IEC 61158-5-14 and IEC 61158-6-14, which correspond to parts of the communication systems commonly known as real-time EPA (Ethernet for Plant Automation).

– Profile 14/1

  This profile contains a selection of AL, DLL and PHL services and protocol definitions from IEC 61158-3-14, IEC 61158-4-14, IEC 61158-5-14 and IEC 61158-6-14. This profile provides real time communication using communication protocols from IEEE 802 and IETF with accurate time synchronization based on IEC 61588.

  This profile supports communications between master devices and bridges.

– Profile 14/2

  This profile provides ISO/IEC/IEEE 8802-3-based real time communication with deterministic communications defined in IEC 61158-3-14 and IEC 61158-4-14.

  This profile supports communication between field devices and bridges.

– Profile 14/3

  This profile contains a selection of AL, DLL and PHL services and protocol definitions from IEC 61158-3-14, IEC 61158-4-14, IEC 61158-5-14 and IEC 61158-6-14. This profile provides real time communication using communication protocols from IEEE 802. Communication protocols from IETF can be used if necessary. Accurate time synchronization based on IEC 61588 should be used.

– Profile 14/4

  This profile provides ISO/IEC/IEEE 8802-3-based real time communication with deterministic communications defined in IEC 61158-3-14 and IEC 61158-4-14. This profile contains a selection of AL services and protocol definitions from IEC 61158-5-14 and IEC 61158-6-14.

  This profile supports communication between master devices and field devices.

4.2 CPF 14 (EPA) communication concept

4.2.1 General

The EPA system is a distributed system which uses the Ethernet network defined by ISO/IEC/IEEE 8802-3 and the protocols from IEEE 802 and IETF to connect field devices and small systems, and to control/monitor equipment in the industrial field. EPA devices work together to provide I/O and control for automated processes and operations.

The EPA system architecture provides a framework for describing these systems as the collection of physical devices interconnected by an EPA network. The objective of 4.2 is to identify the components of the system, describe their relationships and interactions, and define how they are configured.

4.2.2 Network Topology

Figure 1 shows an example of the EPA network topology with two subnets, process monitor layer subnet (L2-subnet) and field device layer subnet (L1-subnet).

[1] EPA™ is a trade name of SUPCON Group Co. Ltd. This information is given for the convenience of users of this document and does not constitute an endorsement by IEC of the trademark holder or any of its products. Compliance with this profile does not require use of the trade name. Use of the trade name requires permission of the trade name holder.

AVA Documents
Document Sharing Hub
Full document details: IEC 61784-2-14-2023

The following describes the characteristics of EPA topology:

– a L1-subnet is used to connect field devices (such as transmitters, actuators and analytical instruments, etc.) mounted in field environment;
– a L1-subnet can be separated into more than one micro-segment, where the time-sharing controlling mechanism is used to meet the demands of deterministic communication;
– a L2-subnet is used to connect the devices of control center and HMI devices and one or more micro-segments. In L2-subnet, regular communication schedule based on CSMA/CD defined in ISO/IEC/IEEE 8802-3 is applied when deterministic communication is not necessary;
– devices on both L1-subnets and L2-subnets may be interconnected with standard switches or hubs;
– an EPA device may function as a bridge, which interconnects a L1-subnet micro-segment to a L2-subnet. This EPA bridge performs message filtering and forwarding between L1-subnet and L2-subnet.

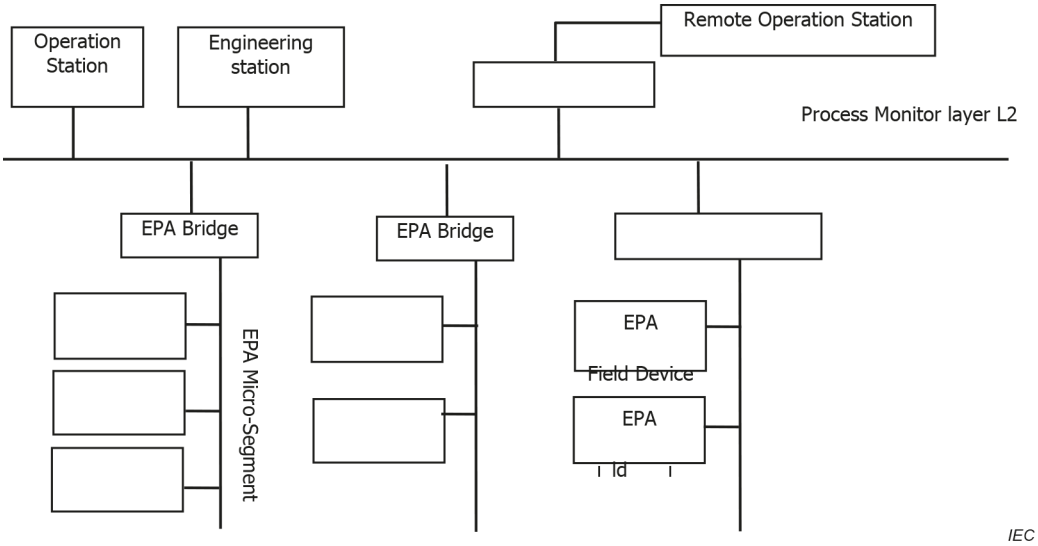

Figure 1 – EPA system network topology example

A micro-segment is a control area, where EPA devices communicate with each other to implement specific measuring and control functions. That is, the devices which need to communicate with each other shall be interconnected in the same L1 micro-segment.

Those devices consisting of a control loop or function block application process, such as transmitters, actuators and controllers which need to communicate with each other, shall be interconnected in the same micro-segment.

4.2.3 EPA devices

4.2.3.1 EPA master device

An EPA master device is connected to a L2-subnet directly. An EPA master device has an EPA communication interface but may have no control function block or function block application. An EPA master device may commonly be a configuration device, a monitoring device or a HMI station.

An EPA master device has a unique IP address in a system.

Documents
Document Sharing Hub
Full document details: IEC 61784-2-14-2023

4.2.3.2 EPA field device

An EPA field device is installed in the industrial field environment. EPA field devices shall have EPA a communication entity and at least include one function block instance.

An EPA field Device has a unique IP address in a system.

4.2.3.3 EPA bridge

An EPA bridge is an optional device that interconnects one L1-subnet micro-segment to a L2-subnet. An EPA bridge has at least two communication interfaces, connecting one L1-subnet micro-segment and one L2-subnet respectively.

An EPA bridge can be configured to provide the following functions:

- communication isolation

  When the traffic occurs between two devices connected in one micro-segment, the EPA bridge shall limit it within the segment. Here, the traffic includes broadcast, multicast and peer to peer communication flows.

- message forwarding and filtering

  An EPA bridge transmit shall forward and filter the messages between one L1-subnet micro-segment and another L1-segment or L2-subnet. That is, when forwarding a message, the EPA bridge shall examine whether it should be forwarded according to configured criteria.

NOTE As an optional device, an EPA bridge is not necessary if the number of nodes in a system is not too large.

4.2.3.4 EPA agent

An EPA agent is an optional device used to interconnect an EPA network and other different networks. It shall provide the function of security control for the remote access.

4.3 CP 14/1

4.3.1 Physical layer

The physical layer of the EPA profile is according to ISO/IEC/IEEE 8802-3 for wired connection, ISO/IEC/IEEE 8802-11 and IEEE Std 802.15.1-2005 for wireless connection.

4.3.2 Data-link layer

The data-link layer shall be according to ISO/IEC/IEEE 8802-3, IEEE Std 802.1Q-2018, ISO/IEC/IEEE 8802-11 and IEEE Std 802.15.1-2005.

4.3.3 Network Layer

Internet standard IETF RFC 791 (IP), IETF RFC 826 (ARP), IETF RFC 792 (ICMP) and their amendments and successors shall be used.

4.3.4 Transport Layer

Internet standard IETF RFC 768 (UDP), IETF RFC 793 (TCP) and their amendments and successors may be used. But for real-time applications, IETF RFC 768 shall be used for field devices, bridges and master devices.

4.3.5 Application layer

4.3.5.1 AL service selection

The application layer services for profile 14/1 are defined in IEC 61158-5-14. Table 2 specifies the clauses included in this profile.

AVA Documents
Document Sharing Hub

Full document details: IEC 61784-2-14-2023

Table 2 – CP 14/1: AL service selection

Clause	Header	Presence	Constraints
1	Scope	YES	—
2	Normative references	Partial	Used when applicable
3	Terms, definitions, symbols, abbreviations	Partial	Used when applicable
4	Concepts	Partial	Used when applicable
5	Data type ASE	YES	—
6	Communication model specification	YES	—

4.3.5.2 AL protocol selection

The application layer protocols for profile 14/1 are defined in IEC 61158-6-14. Table 3 specifies the clauses included in this profile.

Table 3 – CP 14/1: AL protocol selection

Clause	Header	Presence	Constraints
1	Scope	YES	—
2	Normative references	Partial	Used when applicable
3	Terms, definitions, symbols, abbreviations and conventions	Partial	Used when applicable
4	Abstract syntax	YES	—
4.1	Fixed format PDU description	YES	—
4.2	Object definitions in FAL management ASE	YES	—
4.3	Definition of objects used in Type 14 application access entity	YES	—
5	Transfer syntax	YES	—
5.1	Encoding of basic data types	YES	—
5.2	Encoding of Type 14 APDU header	YES	—
5.3	Encoding of FAL management entity service parameters	YES	—
5.4	Encoding of AAE Services	YES	—
6	Structure of FAL protocol state machines	YES	—
7	AP-Context state machine	YES	—
8	FAL management state machines	YES	—
9	Application access entity protocol machine	YES	—
10	Application relationship state machine	YES	—
11	DLL mapping protocol machine	YES	—

4.3.6 Performance indicator selection

4.3.6.1 Performance indicator overview

Table 4 provides an overview of CP 14/1 performance indicators.

Documents
Document Sharing Hub
Full document details: IEC 61784-2-14-2023

Table 4 – CP 14/1: PI overview

Performance indicator	Applicable	Constraints
Delivery Time	YES	—
Number of end-stations	YES	—
Basic network topology	YES	—
Number of switches between end-stations	YES	—
Throughput RTE	YES	—
Non-RTE bandwidth	YES	—
Time synchronization accuracy	YES	—
Non-time-based synchronization accuracy	NO	—
Redundancy recovery time	YES	—

4.3.6.2 Performance indicator dependencies

4.3.6.2.1 Dependency matrix

Table 5 specifies PI dependencies included in this profile.

Table 5 – CP 14/1: PI dependency matrix

Dependent PI	Influencing PI							
	Delivery time	Number of end-stations	Basic network topology	Number of switches between end-stations	Throughput RTE	Non-RTE bandwidth	Time synchronization accuracy	Redundancy recovery time
Delivery time		YES	NO	YES	YES	NO	NO	NO
Number of end-stations	YES		NO	NO	NO	NO	NO	NO
Basic network topology	YES	NO		NO	NO	NO	YES	YES
Number of switches between end-stations	YES	NO	NO		NO	NO	YES	YES
Throughput RTE	NO	NO	NO	NO		YES	NO	NO
Non-RTE bandwidth	NO	NO	NO	NO	NO		YES	NO
Time synchronization accuracy	NO	YES	NO	YES	NO	NO		NO
Redundancy recovery time	YES	NO	YES	YES	NO	NO	NO	

4.3.6.2.2 Delivery Time

The performance indicator delivery time can be calculated by Formula (1).

Documents
Document Sharing Hub
Full document details: IEC 61784-2-14-2023

$$DT = T_{Stack_S} + T_{Queue_S} + T_{Ethernet_S} + T_{Trf_S} \times N_{data} + T_{Cable} \times L_{Cable} + T_{Switch} \times N_{Switch} + T_{Stack_R} \quad (1)$$

where

DT	is the delivery time;
T_{Stack_S}	is the sender stack processing time;
T_{Queue_S}	is the sender queuing delay;
$T_{Ethernet_S}$	is the sender traversal time through MAC and Phy based on ISO/IEC/IEEE 8802-3;
T_{Trf_S}	is the transfer time for an octet;
N_{data}	is the length in octets of complete Ethernet frame;
T_{Cable}	is the cable delay;
L_{Cable}	is the cable length;
T_{Switch}	is the switch delay;
N_{Switch}	is the number of switches between end-stations;
T_{Stack_R}	is the receiver stack processing time including Phy and MAC.

As shown in Formula (1):

- the number of end-stations influences DT with queue delay;
- the number of switches between end-stations influences DT. DT will be longer when the number of switches between end-stations increases;
- the throughput RTE influences DT. That is, DT will be longer due to queue delay when Throughput RTE increases.

4.3.6.2.3 Number of end-stations

If the delivery time is set to the bounded delivery time, then the maximum number of end-stations is restricted.

4.3.6.2.4 Basic network topology

The basic network topology is designed in linear, star, ring or daisy-chain according to the delivery time in application. If the delivery time is preset to the boundary delivery time, the basic network topology shall be set to a hierarchical star.

If the time synchronization accuracy is set to the minimum value, the basic network topology shall be set to a hierarchical star.

If redundancy recovery time is allowed to use rapid spanning tree algorithm according to IEEE Std 802.1Q-2018, then the basic network topology can be designed in linear, star, ring or daisy-chain.

4.3.6.2.5 Number of switches between end-stations

The number of switches between end-stations shall be designed to a minimum value so that delivery time, time synchronization accuracy and redundancy recovery accuracy meet the application demands.

Documents
Document Sharing Hub
Full document details: IEC 61784-2-14-2023

4.3.6.2.6 Relation between Throughput RTE and Non-RTE bandwidth

The relation between Throughput RTE and Non-RTE bandwidth is specified in Formula (2).

$$NRTE_BW = ((RateofEthernet - ThroughputRTE \times 8) / RateofEthernet) \times 100\ \% \quad (2)$$

where

NRTE_BW is the non-RTE bandwidth, in %;

RateofEthernet is the Ethernet data rate in Mbit/s;

ThroughputRTE is the RTE throughput in octets/s.

Throughput RTE can be calculated by Formula (3).

$$ThroughputRTE = (\sum (RTEData + TSData + RMData)) / s \quad (3)$$

where

ThroughputRTE is the RTE throughput in octets/s;

RTEData is the real-time data in octets;

TSData is the time synchronization data in octets;

RMData is the redundancy management data in octets.

4.3.6.2.7 Time synchronization accuracy

Time synchronization accuracy depends on synchronization cycle and switch delay. The synchronization cycle depends on the number of end-stations and the switch delay depends on the number of switches between end-stations.

4.3.6.2.8 Redundancy recovery time

The time to detect the failure is dependent from the number of switches between end-stations.

4.3.6.3 Consistent set of performance indicators

Table 6 specifies a consistent set of PI included in this profile.

Table 6 – CP 14/1: Consistent set of PIs

Performance indicator	Value	Constraints
Delivery time	5 ms 10 ms	Without failure 1 frame lost
Number of end-stations	32	Star topology with switches
Number of switches between end-stations	4	—
Throughput RTE	1 536 000 octets/s	—
Non-RTE bandwidth	85 %	100 Mbit/s Ethernet
Time synchronization accuracy	< 10 µs	—
Redundancy recovery time	< 300 ms	—

Documents
Document Sharing Hub
Full document details: IEC 61784-2-14-2023

4.4 CP 14/2

4.4.1 Physical layer

The physical layer of the EPA profile is according to ISO/IEC/IEEE 8802-3. EPA devices may use a data rate of 10 Mbit/s, 100 Mbit/s and higher. The topology shall be linear, star, ring or the combination of the above.

4.4.2 Data-link layer

The data-link layer shall be according to ISO/IEC/IEEE 8802-3, IEEE Std 802.1Q-2018.

In addition, EPA Communication Scheduling Management Entity (ECSME) is defined in ISO/IEC/IEEE 8802-3, data-link services are defined in IEC 61158-3-14, and data-link protocol to manage the deterministic communication in IEC 61158-4-14.

Table 7 defines the DLL service selection from IEC 61158-3-14 for profile 14/2.

Table 7 – CP 14/2: DLL service selection

Clause	Header	Presence	Constraints
1	Scope	YES	—
2	Normative references	Partial	Used when applicable
3	Terms, definitions, symbols, abbreviations and conventions	Partial	Used when applicable
4	DL Service and concept	Partial	Used when applicable
4.1	General	Partial	Used when applicable
4.2	Services provided by the DLL	YES	—
5	DL-management services	YES	—
5.1	Overview	Partial	Used when applicable
5.2	Non-periodic data annunciation	YES	—
5.3	EndofNonPeriodicDataSendingAnnunciation service	YES	—
5.4	DL-management for FRT applications	—	—

Table 8 defines the DLL protocol selections from IEC 61158-4-14 for CP14/2.

Table 8 – CP 14/2: DLL protocol selection

Clause	Header	Presence	Constraints
1	Scope	YES	—
2	Normative references	Partial	Used when applicable
3	Terms, definitions, symbols and abbreviations	Partial	Used when applicable
4	Overview of the DL-protocol	Partial	Used when applicable
4.1	General	Partial	Used when applicable
4.2	Services provided by the DL	YES	—
4.3	Structure of deterministic communication scheduling	YES	—
5	Procedure of deterministic communication scheduling	–	—
5.1	Overview	YES	—
5.2	State transitions	YES	—

Documents
Document Sharing Hub
Full document details: IEC 61784-2-14-2023

Clause	Header	Presence	Constraints
5.3	State table	YES	—
5.4	Function descriptions	–	—
6	Structure and encoding of ECSME PDU	YES	—

4.4.3 Network Layer

Internet standard IETF RFC 791 (IP), IETF RFC 826 (ARP), IETF RFC 792 (ICMP) and their amendments and successors shall be used.

4.4.4 Transport Layer

Internet standard IETF RFC 768 (UDP), IETF RFC 793 (TCP) and their amendments and successors may be used. But for real-time applications, IETF RFC 768 shall be used for field devices, bridges and master devices.

4.4.5 Application layer

4.4.5.1 AL service selection

The application layer services for profile 14/2 are defined in IEC 61158-5-14. Table 9 specifies the clauses included in this profile.

Table 9 – CP 14/2: AL service selection

Clause	Header	Presence	Constraints
1	Scope	YES	—
2	Normative references	Partial	Used when applicable
3	Terms, definitions, symbols, abbreviations and conventions	Partial	Used when applicable
4	Concepts	Partial	Used when applicable
5	Data type ASE	YES	—
6	Communication model specification	YES	—

4.4.5.2 AL protocol selection

The application layer protocol for profile 14/2 is defined in IEC 61158-6-14. Table 10 specifies the clauses included in this profile.

Documents
Document Sharing Hub

Full document details: IEC 61784-2-14-2023

Table 10 – CP 14/2: AL protocol selection

Clause	Header	Presence	Constraints
1	Scope	YES	—
2	Normative references	Partial	Used when applicable
3	Terms, definitions, symbols, abbreviations and conventions	Partial	Used when applicable
4	Abstract syntax	YES	—
4.1	Fixed format PDU description	YES	—
4.2	Object definitions in FAL management ASE	YES	—
4.3	Definition of objects used in Type 14 application access entity	YES	—
5	Transfer syntax	YES	—
5.1	Encoding of basic data types	YES	—
5.2	Encoding of Type 14 APDU header	YES	—
5.3	Encoding of FAL management entity service parameters	YES	—
5.4	Encoding of AAE Services	YES	—
6	Structure of FAL protocol state machines	YES	—
7	AP-Context state machine	YES	—
8	FAL management state machines	YES	—
9	Application access entity protocol machine	YES	—
10	Application relationship state machine	YES	—
11	DLL mapping protocol machine	YES	—

4.4.6 Performance indicator selection

4.4.6.1 Performance indicator overview

Table 11 provides an overview of CP 14/2 performance indicators.

Table 11 – CP 14/2: PI overview

Performance indicator	Applicable	Constraints
Delivery Time	YES	—
Number of end-stations	YES	—
Basic network topology	YES	—
Number of switches between end-stations	YES	—
Throughput RTE	YES	—
Non-RTE bandwidth	YES	—
Time synchronization accuracy	YES	—
Non-time-based synchronization accuracy	NO	—
Redundancy recovery time	YES	—

4.4.6.2 Performance indicator dependencies

4.4.6.2.1 Dependency matrix

Table 12 specifies the performance indicator dependencies for CP 14/2.

Documents
Document Sharing Hub

Table 12 – CP 14/2: PI dependency matrix

Dependent PI	Influencing PI							
	Delivery time	Number of end-stations	Basic network topology	Number of switches between end-stations	Throughput RTE	Non-RTE bandwidth	Time synchronization accuracy	Redundancy recovery time
Delivery time		YES	NO	YES	YES	NO	NO	NO
Number of end-stations	YES		NO	NO	NO	NO	NO	NO
Basic network topology	YES	NO		NO	NO	NO	YES	YES
Number of switches between end-stations	YES	NO	NO		NO	NO	YES	YES
Throughput RTE	NO	NO	NO	NO		YES	NO	NO
Non-RTE bandwidth	NO	NO	NO	NO	NO		YES	NO
Time synchronization accuracy	NO	YES	NO	YES	NO	NO		NO
Redundancy recovery time	YES	NO	YES	YES	NO	NO	NO	

4.4.6.2.2 Delivery Time

The performance indicator delivery time can be calculated by Formula (4).

$$DT = T_{Stack_S} + T_{Queue_S} + T_{Ethernet_S} + T_{Trf_S} \times N_{data} + T_{Cable} \times L_{Cable} + T_{Switch} \times N_{Switch} + T_{Stack_R} \quad (4)$$

where

DT is the delivery time;

T_{Stack_S} is the sender stack processing time;

T_{Queue_S} is the sender queuing delay, the max queue delay is equal to cycle time, the minimum queue delay is 0;

$T_{Ethernet_S}$ is the sender traversal time through MAC and Phy based on ISO/IEC/IEEE 8802-3;

T_{Trf_S} is the transfer time for an octet;

N_{data} is the length in octets of complete Ethernet frame;

T_{Cable} is the cable delay;

L_{Cable} is the cable length;

T_{Switch} is the Switch delay;

N_{Switch} is the Number of switches between end-stations;

T_{Stack_R} is the receiver stack processing time including Phy and MAC.

Documents
Document Sharing Hub
Full document details: IEC 61784-2-14-2023