IEC 61784-5-4

Edition 1.0 2010-07

INTERNATIONAL STANDARD

NORME INTERNATIONALE

colour inside

Industrial communication networks – Profiles – Part 5-4: Installation of fieldbuses – Installation profiles for CPF 4

Réseaux de communication industriels – Profils – Partie 5-4: Installation de bus de terrain – Profils d'installation pour CPF 4

IEC 61784-5-4:2010

Documents
Document Sharing Hub

Full document details: IEC 61784-5-4 2010

THIS PUBLICATION IS COPYRIGHT PROTECTED

Copyright © 2010 IEC, Geneva, Switzerland

All rights reserved. Unless otherwise specified, no part of this publication may be reproduced or utilized in any form or by any means, electronic or mechanical, including photocopying and microfilm, without permission in writing from either IEC or IEC's member National Committee in the country of the requester.
If you have any questions about IEC copyright or have an enquiry about obtaining additional rights to this publication, please contact the address below or your local IEC member National Committee for further information.

Droits de reproduction réservés. Sauf indication contraire, aucune partie de cette publication ne peut être reproduite ni utilisée sous quelque forme que ce soit et par aucun procédé, électronique ou mécanique, y compris la photocopie et les microfilms, sans l'accord écrit de la CEI ou du Comité national de la CEI du pays du demandeur.
Si vous avez des questions sur le copyright de la CEI ou si vous désirez obtenir des droits supplémentaires sur cette publication, utilisez les coordonnées ci-après ou contactez le Comité national de la CEI de votre pays de résidence.

IEC Central Office
3, rue de Varembé
CH-1211 Geneva 20
Switzerland

Tel.: +41 22 919 02 11
Fax: +41 22 919 03 00
info@iec.ch
www.iec.ch

About the IEC

The International Electrotechnical Commission (IEC) is the leading global organization that prepares and publishes International Standards for all electrical, electronic and related technologies.

About IEC publications

The technical content of IEC publications is kept under constant review by the IEC. Please make sure that you have the latest edition, a corrigenda or an amendment might have been published.

Useful links:

IEC publications search - www.iec.ch/searchpub

The advanced search enables you to find IEC publications by a variety of criteria (reference number, text, technical committee,…).
It also gives information on projects, replaced and withdrawn publications.

IEC Just Published - webstore.iec.ch/justpublished

Stay up to date on all new IEC publications. Just Published details all new publications released. Available on-line and also once a month by email.

Electropedia - www.electropedia.org

The world's leading online dictionary of electronic and electrical terms containing more than 30 000 terms and definitions in English and French, with equivalent terms in additional languages. Also known as the International Electrotechnical Vocabulary (IEV) on-line.

Customer Service Centre - webstore.iec.ch/csc

If you wish to give us your feedback on this publication or need further assistance, please contact the Customer Service Centre: csc@iec.ch.

A propos de la CEI

La Commission Electrotechnique Internationale (CEI) est la première organisation mondiale qui élabore et publie des Normes internationales pour tout ce qui a trait à l'électricité, à l'électronique et aux technologies apparentées.

A propos des publications CEI

Le contenu technique des publications de la CEI est constamment revu. Veuillez vous assurer que vous possédez l'édition la plus récente, un corrigendum ou amendement peut avoir été publié.

Liens utiles:

Recherche de publications CEI - www.iec.ch/searchpub

La recherche avancée vous permet de trouver des publications CEI en utilisant différents critères (numéro de référence, texte, comité d'études,…).
Elle donne aussi des informations sur les projets et les publications remplacées ou retirées.

Just Published CEI - webstore.iec.ch/justpublished

Restez informé sur les nouvelles publications de la CEI. Just Published détaille les nouvelles publications parues. Disponible en ligne et aussi une fois par mois par email.

Electropedia - www.electropedia.org

Le premier dictionnaire en ligne au monde de termes électroniques et électriques. Il contient plus de 30 000 termes et définitions en anglais et en français, ainsi que les termes équivalents dans les langues additionnelles. Egalement appelé Vocabulaire Electrotechnique International (VEI) en ligne.

Service Clients - webstore.iec.ch/csc

Si vous désirez nous donner des commentaires sur cette publication ou si vous avez des questions contactez-nous: csc@iec.ch.

Documents
Document Sharing Hub

Full document details: IEC 61784-5-4 2010

IEC 61784-5-4

Edition 1.0 2010-07

INTERNATIONAL STANDARD

NORME INTERNATIONALE

colour inside

Industrial communication networks – Profiles – Part 5-4: Installation of fieldbuses – Installation profiles for CPF 4

Réseaux de communication industriels – Profils – Partie 5-4: Installation de bus de terrain – Profils d'installation pour CPF 4

INTERNATIONAL ELECTROTECHNICAL COMMISSION

COMMISSION ELECTROTECHNIQUE INTERNATIONALE

PRICE CODE
CODE PRIX V

ICS 25.040.40; 35.100.4

ISBN 978-2-88912-000-0

Warning! Make sure that you obtained this publication from an authorized distributor.
Attention! Veuillez vous assurer que vous avez obtenu cette publication via un distributeur agréé.

AVA Documents
Document Sharing Hub

® Registered trademark of the International Electrotechnical Commission
Marque déposée de la Commission Electrotechnique Internationale

Full document details: IEC 61784-5-4 2010

CONTENTS

FOREWORD 3
INTRODUCTION 5
1 Scope 6
2 Normative references 6
3 Terms, definitions and abbreviated terms 6
4 CPF 4: Overview of installation profiles 6
5 Installation profile conventions 6
6 Conformance to installation profiles 7
Annex A (normative) CP 4/1 (P-NET, RS 485) specific installation profile 9
Annex B (normative) CP 4/3 (P-NET on IP) specific installation profile 21
Bibliography 32

Figure 1 – Standards relationships 5
Figure A.1 – Resistor termination circuit 14

Table A.1 – Basic network characteristics for balanced cabling not based on Ethernet 11
Table A.2 – Information relevant to copper cable: fixed cable 12
Table A.3 – Connectors for copper cabling CPs not based on Ethernet 13
Table A.4 – Parameters for balanced cables 16
Table B.1 – Network characteristics for balanced cabling based on Ethernet 23
Table B.2 – Information relevant to copper cables: fixed cables 24
Table B.3 – Connectors for balanced cabling CPs based on Ethernet 24
Table B.4 – Parameters for balanced cables 27

Documents
Document Sharing Hub

Full document details: IEC 61784-5-4 2010

INTERNATIONAL ELECTROTECHNICAL COMMISSION

INDUSTRIAL COMMUNICATION NETWORKS – PROFILES –

Part 5-4: Installation of fieldbuses – Installation profiles for CPF 4

FOREWORD

1) The International Electrotechnical Commission (IEC) is a worldwide organization for standardization comprising all national electrotechnical committees (IEC National Committees). The object of IEC is to promote international co-operation on all questions concerning standardization in the electrical and electronic fields. To this end and in addition to other activities, IEC publishes International Standards, Technical Specifications, Technical Reports, Publicly Available Specifications (PAS) and Guides (hereafter referred to as "IEC Publication(s)"). Their preparation is entrusted to technical committees; any IEC National Committee interested in the subject dealt with may participate in this preparatory work. International, governmental and non-governmental organizations liaising with the IEC also participate in this preparation. IEC collaborates closely with the International Organization for Standardization (ISO) in accordance with conditions determined by agreement between the two organizations.
2) The formal decisions or agreements of IEC on technical matters express, as nearly as possible, an international consensus of opinion on the relevant subjects since each technical committee has representation from all interested IEC National Committees.
3) IEC Publications have the form of recommendations for international use and are accepted by IEC National Committees in that sense. While all reasonable efforts are made to ensure that the technical content of IEC Publications is accurate, IEC cannot be held responsible for the way in which they are used or for any misinterpretation by any end user.
4) In order to promote international uniformity, IEC National Committees undertake to apply IEC Publications transparently to the maximum extent possible in their national and regional publications. Any divergence between any IEC Publication and the corresponding national or regional publication shall be clearly indicated in the latter.
5) IEC itself does not provide any attestation of conformity. Independent certification bodies provide conformity assessment services and, in some areas, access to IEC marks of conformity. IEC is not responsible for any services carried out by independent certification bodies.
6) All users should ensure that they have the latest edition of this publication.
7) No liability shall attach to IEC or its directors, employees, servants or agents including individual experts and members of its technical committees and IEC National Committees for any personal injury, property damage or other damage of any nature whatsoever, whether direct or indirect, or for costs (including legal fees) and expenses arising out of the publication, use of, or reliance upon, this IEC Publication or any other IEC Publications.
8) Attention is drawn to the Normative references cited in this publication. Use of the referenced publications is indispensable for the correct application of this publication.
9) Attention is drawn to the possibility that some of the elements of this IEC Publication may be the subject of patent rights. IEC shall not be held responsible for identifying any or all such patent rights.

International Standard IEC 61784-5-4 has been prepared by subcommittee 65C: Industrial networks, of IEC technical committee 65: Industrial-process measurement, control and automation.

This standard is to be used in conjunction with IEC 61918:2010.

Documents
Document Sharing Hub

Full document details: IEC 61784-5-4 2010

This bilingual version (2012-02) corresponds to the monolingual English version, published in 2010-07.

The text of this standard is based on the following documents:

FDIS	Report on voting
65C/602/FDIS	65C/616/RVD

Full information on the voting for the approval of this standard can be found in the report on voting indicated in the above table.

The French version of this standard has not been voted upon.

This publication has been drafted in accordance with the ISO/IEC Directives, Part 2.

A list of all parts of the IEC 61784-5 series, published under the general title *Industrial communication networks – Profiles – Installation of fieldbuses*, can be found on the IEC website.

The committee has decided that the contents of this publication will remain unchanged until the stability date indicated on the IEC web site under "http://webstore.iec.ch" in the data related to the specific publication. At this date, the publication will be

- reconfirmed,
- withdrawn,
- replaced by a revised edition, or
- amended.

IMPORTANT – The 'colour inside' logo on the cover page of this publication indicates that it contains colours which are considered to be useful for the correct understanding of its contents. Users should therefore print this document using a colour printer.

Documents
Document Sharing Hub

Full document details: IEC 61784-5-4 2010

INTRODUCTION

This International Standard is one of a series produced to facilitate the use of communication networks in industrial control systems.

IEC 61918:2010 provides the common requirements for the installation of communication networks in industrial control systems. This installation profile standard provides the installation profiles of the communication profiles (CP) of a specific communication profile family (CPF) by stating which requirements of IEC 61918 fully apply and, where necessary, by supplementing, modifying, or replacing the other requirements (see Figure 1).

For general background on fieldbuses, their profiles, and relationship between the installation profiles specified in this standard, see IEC/TR 61158-1.

Each CP installation profile is specified in a separate annex of this standard. Each annex is structured exactly as the reference standard IEC 61918 for the benefit of the persons representing the roles in the fieldbus installation process as defined in IEC 61918 (planner, installer, verification personnel, validation personnel, maintenance personnel, administration personnel). By reading the installation profile in conjunction with IEC 61918, these persons immediately know which requirements are common for the installation of all CPs and which are modified or replaced. The conventions used to draft this standard are defined in Clause 5.

The provision of the installation profiles in one standard for each CPF (for example IEC 61784-5-4 for CPF 4), allows readers to work with standards of a convenient size.

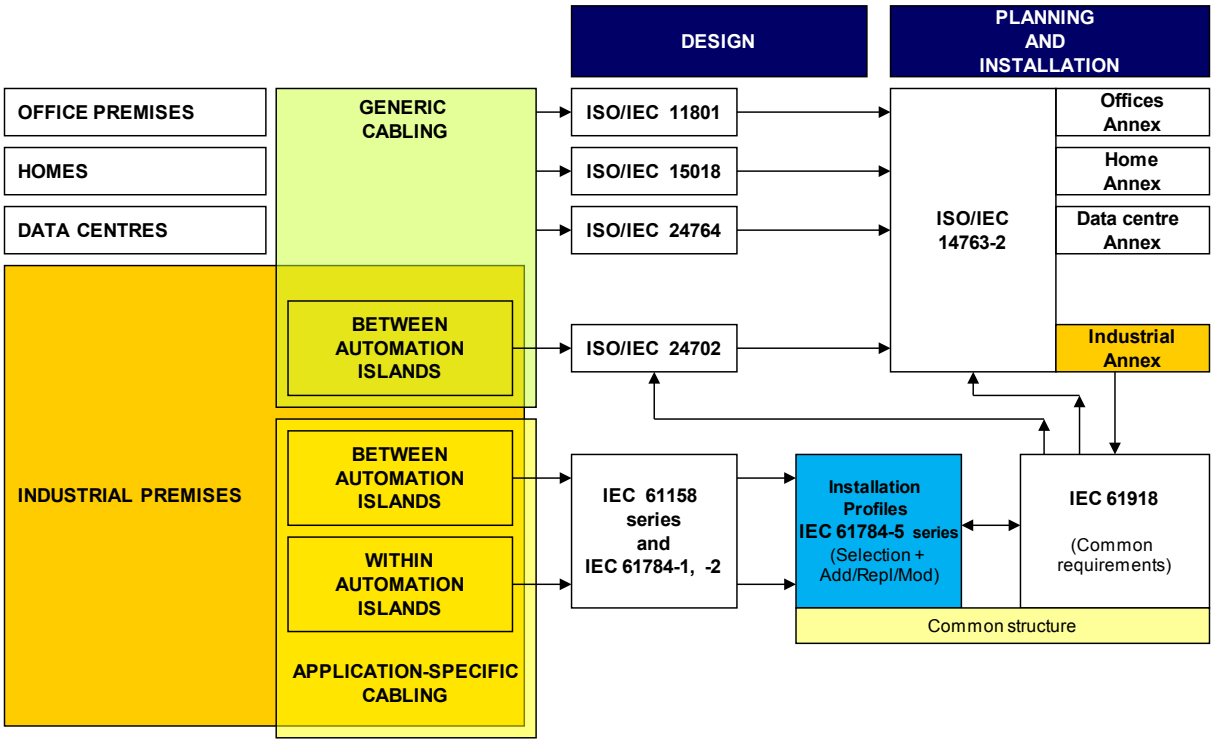

Figure 1 – Standards relationships

Documents
Document Sharing Hub
Full document details: IEC 61784-5-4 2010

INDUSTRIAL COMMUNICATION NETWORKS – PROFILES –

Part 5-4: Installation of fieldbuses – Installation profiles for CPF 4

1 Scope

This part of IEC 61784 specifies the installation profiles for CPF 4 (P-NET)[1].

The installation profiles are specified in the annexes. These annexes are read in conjunction with IEC 61918:2010.

2 Normative references

The following referenced documents are indispensable for the application of this document. For dated references, only the edition cited applies. For undated references, the latest edition of the referenced document (including any amendments) applies.

IEC 61918:2010, *Industrial communication networks – Installation of communication networks in industrial premises*

The normative references of IEC 61918:2010, Clause 2, apply.

3 Terms, definitions and abbreviated terms

For the purposes of this document, the terms, definitions and abbreviated terms of IEC 61918:2010, Clause 3, apply.

4 CPF 4: Overview of installation profiles

CPF 4 consists of three communication profiles as specified in IEC 61784-1 and IEC 61784-2.

The installation requirements for CP 4/1 (P-NET with physical layer according to RS 485) are specified in Annex A.

The installation requirements for CP 4/3 (P-NET on IP) are specified in Annex B.

NOTE There is no installation profile specified for CP 4/2 (P-NET with physical layer according to RS 232).

5 Installation profile conventions

The numbering of the clauses and subclauses in the annexes of this standard corresponds to the numbering of IEC 61918 main clauses and subclauses.

---

1 P-NET is the trade name of International P-NET User Organisation ApS (IPUO). This information is given for the convenience of users of this International Standard and does not constitute an endorsement by IEC of the trademark holder or any of its products. Compliance to this profile does not require use of the trade name P-NET. Use of the trade name P-NET requires permission of the trade name holder.

AVA Documents Document Sharing Hub

Full document details: IEC 61784-5-4 2010

The annex clauses and subclauses of this standard supplement, modify, or replace the respective clauses and subclauses in IEC 61918.

Where there is no corresponding subclause of IEC 61918 in the normative annexes in this standard, the subclause of IEC 61918 applies without modification.

The annex heading letter represents the installation profile assigned in Clause 4. The annex (sub)clause numbering following the annex letter shall represent the corresponding (sub)clause numbering of IEC 61918.

EXAMPLE "Annex B.4.4" in IEC 61784-5-4 means that CP 4/3 specifies the Subclause 4.4 of IEC 61918.

All main clauses of IEC 61918 are cited and apply in full unless otherwise stated in each normative installation profile annex.

If all subclauses of a (sub)clause are omitted, then the corresponding IEC 61918 (sub)clause applies.

If in a (sub)clause it is written "Not applicable", then the corresponding IEC 61918 (sub)clause does not apply.

If in a (sub)clause it is written "*Addition*", then the corresponding IEC 61918 (sub)clause applies with the additions written in the profile.

If in a (sub)clause it is written "*Replacement*", then the text provided in the profile replaces the text of the corresponding IEC 61918 (sub)clause.

NOTE A replacement can also comprise additions.

If in a (sub)clause it is written "*Modification*", then the corresponding IEC 61918 (sub)clause applies with the modifications written in the profile.

If all (sub)clauses of a (sub)clause are omitted but in this (sub)clause it is written "*(Sub)clause x has addition*:" (or "*replacement*:") or "(Sub)clause is not applicable.", then (sub)clause x becomes valid as declared and all the other corresponding IEC 61918 (sub)clauses apply.

6 Conformance to installation profiles

Each installation profile within this standard includes part of IEC 61918:2010. It may also include defined additional specifications.

A statement of compliance to an installation profile of this standard shall be stated[2] as either

Compliance to IEC 61784-5-4:2010[3] for CP 4/m<name> or

Compliance to IEC 61784-5-4 (Ed.1.0) for CP 4/m <name>

where the name within the angle brackets < > is optional and the angle brackets are not to be included. The m within CP 4/m shall be replaced by the profile number 1 or 3.

NOTE The name may be the name of the profile, for example 'P-NET with physical layer according to RS 485' or 'P-NET on IP'.

If the name is a trade name then the permission of the trade name holder shall be required.

---

2 In accordance with ISO/IEC Directives

3 The date should not be used when the edition number is used.

Documents
Document Sharing Hub

Full document details: IEC 61784-5-4 2010

Product standards shall not include any conformity assessment aspects (including quality management provisions), neither normative nor informative, other than provisions for product testing (evaluation and examination).

Documents
Document Sharing Hub

Full document details: IEC 61784-5-4 2010

Annex A
(normative)

CP 4/1 (P-NET, RS 485) specific installation profile

A.1 Installation profile scope

Addition:

This standard specifies the installation profile for Communication Profile CP 4/1 (P-NET with physical layer according to RS 485). The CP 4/1 is specified in IEC 61784-1.

A.2 Normative references

A.3 Installation profile terms, definitions, and abbreviated terms

A.3.1 Terms and definitions

A.3.2 Abbreviated terms

A.3.3 Conventions for installation profiles

Not applicable.

A.4 Installation planning

A.4.1 Introduction

A.4.1.1 Objective

A.4.1.2 Cabling in industrial premises

Addition:

Generic cabling in accordance with ISO/IEC 24702 is not suitable for the cabling of CP 4/1 networks.

A.4.1.3 The planning process

A.4.1.4 Specific requirements for CPs

A.4.1.5 Specific requirements for generic cabling in accordance with ISO/IEC 24702

A.4.2 Planning requirements

A.4.2.1 Safety

A.4.2.1.1 General

A.4.2.1.2 Electric safety

A.4.2.1.3 Functional safety

Not applicable.

Documents
Document Sharing Hub

Full document details: IEC 61784-5-4 2010

A.4.2.1.4 Intrinsic safety

Not applicable.

A.4.2.1.5 Safety of optical fibre communication systems

Not applicable

A.4.2.2 Security

A.4.2.3 Environmental considerations and EMC

A.4.2.4 Specific requirements for generic cabling in accordance with ISO/IEC 24702

A.4.3 Network capabilities

A.4.3.1 Network topology

A.4.3.1.1 Common description

A.4.3.1.2 Basic physical topologies for passive networks

Modification:

The star topology shall not be used for CP 4/1 passive networks. A ring topology shall be used for CP 4/1 passive networks.

A.4.3.1.3 Basic physical topologies for active networks

Modification:

The star topology shall not be used for CP 4/1 active networks.

A.4.3.1.4 Combination of basic topologies

A.4.3.1.5 Specific requirements for CPs

Addition:

With bus topology; both ends of the network segment shall be terminated.

A.4.3.1.6 Specific requirements for generic cabling in accordance with ISO/IEC 24702

A.4.3.2 Network characteristics

A.4.3.2.1 General

A.4.3.2.2 Network characteristics for balanced cabling not based on Ethernet

Replacement: Table A.1 provides values based on the template given in IEC 61918:2010, Table 1.

Documents
Document Sharing Hub

Full document details: IEC 61784-5-4 2010

Table A.1 – Basic network characteristics for balanced cabling not based on Ethernet

Characteristics	CP 4/1 (P-NET)	
Network topology	RS 485 bus	RS 485 ring
Length / transmission speed	**Segment length** m	
76,8 kbits/s	600	1 200
Maximum capacity	**Max. No.**	
Devices / segment	125	125
Number of devices / network	unlimited [a]	unlimited [a]
[a] Practically unlimited since P-NET is a multi-master bus, which can accept up to 32 initiators per link, where each of the initiators can have several link-interfaces (segments), where each link again can have up to 125 devices and so on. The addressing space within the multi-link structure can hold up to 11 levels of links for each initiator.		

A.4.3.2.3 Network characteristics for balanced cabling based on Ethernet

Not applicable.

A.4.3.2.4 Network characteristics for optical fibre cabling

Not applicable.

A.4.3.2.5 Specific network characteristics

A.4.3.2.6 Specific requirements for generic cabling in accordance with ISO/IEC 24702

A.4.4 Selection and use of cabling components

A.4.4.1 Cable selection

A.4.4.1.1 Common description

A.4.4.1.2 Copper cables

A.4.4.1.2.1 Balanced cables for Ethernet based CPs

Not applicable.

A.4.4.1.2.2 Copper cables for non Ethernet based CPs

Addition:

Unshielded cables shall not be used with CP 4/1 networks.

Replacement: Table A.2 provides values based on the template given in IEC 61918:2010, Table 4.

Documents
Document Sharing Hub
Full document details: IEC 61784-5-4 2010

Table A.2 – Information relevant to copper cable: fixed cable

Characteristics	CP 4/1 (P-NET)
Nominal impedance of cable (tolerance)	110 Ω ± 100 Ω
DCR of conductors	< 110 Ω/km
DCR of shield	< 12 Ω/km
Number of conductors	2 as twisted pair, 2 x twisted pair installation is recommended
Shielding	STP
Colour code for conductor	-
Jacket colour requirements	None
Resistance to harsh environment /e.g. UV, oil resist, LS0H)	Application dependent
Agency ratings	Application dependent
Conductor cross-sectional area	≥ 0,22 mm^2 for bus length 0 m to 100 m ≥ 0,34 mm^2 for bus length 100 m to 400 m ≥ 0,50 mm^2 for bus length 400 m to 1200 m
Capacitance	< 75 pF/m

A.4.4.1.3 Cables for wireless installation

Not applicable.

A.4.4.1.4 Optical fibre cables

Not applicable.

A.4.4.1.5 Special purpose balanced copper and optical fibre cables

A.4.4.1.6 Specific requirements for CPs

A.4.4.1.7 Specific requirements for generic cabling in accordance with ISO/IEC 24702

A.4.4.2 Connecting hardware selection

A.4.4.2.1 Common description

A.4.4.2.2 Connecting hardware for balanced cabling CPs based on Ethernet

Not applicable.

A.4.4.2.3 Connecting hardware for copper cabling CPs not based on Ethernet

Replacement: Table A.3 provides values based on the template given in IEC 61918:2010, Table 8.

AVA Documents
Document Sharing Hub

Full document details: IEC 61784-5-4 2010

Table A.3 – Connectors for copper cabling CPs not based on Ethernet

	IEC 60807-2 or IEC 60807-3	IEC 60947-5-2 or IEC 61076-2-101			IEC 61169-8	ANSI/NFPA T3.5.29 R1-2003		Others		
	Sub-D	M12-5 with A-coding	M12-5 with B-coding	M12-n with X-coding	Coaxial (BNC)	M 18	7/8-16 UN-2B THD	Open style	Terminal block	Others
CP 4/1	9 pin	No	No	No	No	No	No	No	Yes	Hybrid style

A.4.4.2.4 Connecting hardware for wireless installation

Not applicable.

A.4.4.2.5 Connecting hardware for optical fibre cabling

Not applicable.

A.4.4.2.6 Specific requirements for CPs

Not applicable.

A.4.4.2.7 Specific requirements for generic cabling in accordance with ISO/IEC 24702

A.4.4.3 Connections within a channel/permanent link

A.4.4.3.1 Common description

A.4.4.3.2 Balanced cabling connections and splices for CPs based on Ethernet

Not applicable.

A.4.4.3.3 Copper cabling connections and splices for CPs not based on Ethernet

A.4.4.3.3.1 Common description

Addition:

Refer to manufacturer's data sheet for any possible restrictions in number of allowed connections.

A.4.4.3.3.2 Connections minimum distance

A.4.4.3.3.3 Copper cabling splices

A.4.4.3.3.4 Copper cabling bulkhead connections

A.4.4.3.3.5 Copper cabling J-J adaptors

A.4.4.3.4 Optical fibre cabling connections and splices for CPs based on Ethernet

Not applicable.

A.4.4.3.5 Optical fibre cabling connections and splices for CPs not based on Ethernet

Not applicable.

AVA Documents
Document Sharing Hub

Full document details: IEC 61784-5-4 2010

A.4.4.3.6 Specific requirements for generic cabling in accordance with ISO/IEC 24702

A.4.4.4 Terminators

A.4.4.4.1 Common description

Addition:

Both ends of the network segment shall be terminated when using bus topology.

A.4.4.4.2 Specific requirements for CPs

Addition:

The termination shall be a resistor termination circuit as shown in Figure A.1.

The following resistor values are recommended:

$R_u = R_d = 390\ \Omega \pm 7{,}8\ \Omega$, min 0,25 W

$R_t = 133\ \Omega \pm 3\ \Omega$, min 0,25 W

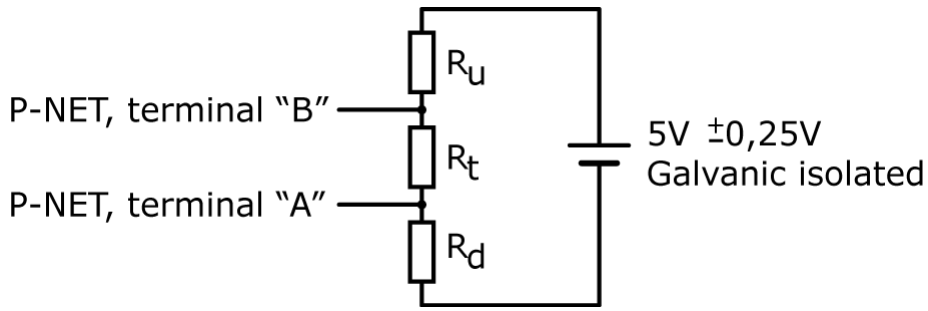

Figure A.1 – Resistor termination circuit

A.4.4.4.3 Specific requirements for generic cabling in accordance with ISO/IEC 24702

A.4.4.5 Device location and connection

A.4.4.6 Coding and labeling

A.4.4.6.1 Common description

A.4.4.6.2 Additional requirements for CPs

A.4.4.6.3 Specific requirements for CPs

A.4.4.6.4 Specific requirements for generic cabling in accordance with ISO/IEC 24702

Not applicable.

A.4.4.7 Earthing and bonding of equipment and devices and shielded cabling

Documents
Document Sharing Hub
Full document details: IEC 61784-5-4 2010

A.4.4.7.1 Common description

A.4.4.7.2 Bonding and earthing of enclosures and pathways

A.4.4.7.3 Earthing methods

A.4.4.7.3.1 Mesh, equipotential

Addition:

An equipotential mesh earthing system shall be used for CP 4/1 networks.

A.4.4.7.3.2 Star

Replacement:

A star earthing system shall not be used for CP 4/1 networks.

A.4.4.7.3.3 Earthing of equipment (devices)

A.4.4.7.3.4 Copper bus bars

A.4.4.7.4 Shield earthing

A.4.4.7.4.1 Non-earthing or parallel RC

Addition:

For devices that are not earth connected, the shields of shielded cables entering and exiting the enclosure shall be connected together but isolated from earth. The isolation impedance shall be > 2 MΩ.

A.4.4.7.4.2 Direct

A.4.4.7.4.3 Derivatives of direct and parallel RC

A.4.4.7.5 Specific requirements for CPs

A.4.4.7.6 Specific requirements for generic cabling in accordance with ISO/IEC 24702

Not applicable.

A.4.4.8 Storage and transportation of cables

A.4.4.9 Routing of cables

A.4.4.10 Separation of circuit

A.4.4.11 Mechanical protection of cabling components

A.4.4.12 Installation in special areas

A.4.5 Cabling planning documentation

A.4.6 Verification of cabling planning specification

A.5 Installation implementation

A.5.1 General requirements

Documents
Document Sharing Hub

Full document details: IEC 61784-5-4 2010

A.5.2 Cable installation

A.5.2.1 General requirements for all cabling types

Subclause A.5.2.1.2 has replacement:

Table A.4 provides values based on the template given in IEC 61918:2010, Table 18.

Table A.4 – Parameters for balanced cables

Characteristic		Value
Mechanical force	Minimum bending radius, single bending (mm)	a
	Bending radius, multiple bending (mm)	a
	Pull forces (N)	a
	Permanent tensile forces (N)	a
	Maximum lateral forces (N/cm)	a
	Temperature range during installation (°C)	–20 to +70
[a] Depending on cable type: see manufacturer's data sheet.		

Subclause A.5.2.1.13 is not applicable.

A.5.2.2 Installation and routing

A.5.2.3 Specific cable installation requirements for CPs

Not applicable.

A.5.2.4 Specific requirements for wireless installation

Not applicable.

A.5.2.5 Specific requirements for generic cabling in accordance with ISO/IEC 24702

A.5.3 Connector installation

A.5.3.1 Common description

A.5.3.2 Shielded connectors

Addition:

“Pigtails” shall not be used for CP 4/1 networks.

A.5.3.3 Unshielded connectors

Not applicable.

A.5.3.4 Specific requirements for CPs

Not applicable.

A.5.3.5 Specific connector installation requirements for generic cabling in accordance with ISO/IEC 24702

A.5.4 Terminator installation

AVA Documents
Document Sharing Hub

Full document details: IEC 61784-5-4 2010

A.5.4.1 Common description

A.5.4.2 Specific requirements for CPs

Addition:

Both ends of the network segment shall be terminated when using bus topology.

When termination circuits are built in the device, refer to manufacturer's manual for details on how to enable termination.

A.5.5 Device installation

A.5.5.1 Common description

A.5.5.2 Specific requirements for CPs

Not applicable.

A.5.6 Coding and labelling

A.5.6.1 Common description

A.5.6.2 Specific requirements for CPs

Not applicable.

A.5.7 Earthing and bonding of equipment and devices and shield cabling

A.5.7.1 Common description

A.5.7.2 Bonding and earthing of enclosures and pathways

A.5.7.3 Earthing methods

A.5.7.3.1 Equipotential mesh

A.5.7.3.2 Star

Replacement:

A star earthing system shall not be used for CP 4/1 networks.

A.5.7.3.3 Earthing of equipment (devices)

A.5.7.3.3.1 Non-earthing or parallel RC

Addition:

See A.4.4.7.4.1.

A.5.7.3.3.2 Direct

A.5.7.3.3.3 Installing copper bus bars

A.5.7.4 Shield termination methods

A.5.7.4.1 General

A.5.7.4.2 Parallel RC

Not applicable.

Documents
Document Sharing Hub

Full document details: IEC 61784-5-4 2010

A.5.7.4.3 Direct

A.5.7.4.4 Derivatives of direct and parallel RC

Not applicable.

A.5.7.5 Specific requirements for CPs

Addition:

When earthing both ends of the communication cables it shall be ensured that each cabinet is efficiently earthed to avoid the communication cable shield to serve as potential equalization.

When bus cables with 2 x twisted pairs are used, the pair interconnecting 'S' terminals shall be connected to earth in one point only. This avoids the 'S' reference potential to be free floating.

A.5.7.6 Specific earthing and shielding installation requirements for generic cabling in accordance with ISO/IEC 24702

A.5.8 As-implemented cabling documentation

A.6 Installation verification and installation acceptance test

A.6.1 Introduction

A.6.2 Installation verification

A.6.2.1 General

A.6.2.2 Verification according to cabling planning documentation

A.6.2.3 Verification of earthing and bonding

A.6.2.4 Verification of shield earthing

A.6.2.5 Verification of cabling system

A.6.2.6 Cable selection verification

A.6.2.6.1 Common description

A.6.2.6.2 Specific requirements for CPs

Not applicable.

A.6.2.6.3 Specific requirements for wireless installation

Not applicable.

A.6.2.7 Connector verification

A.6.2.7.1 Common description

A.6.2.7.2 Specific requirements for CPs

Not applicable.

A.6.2.7.3 Specific requirements for wireless installation

Not applicable.

Documents
Document Sharing Hub

Full document details: IEC 61784-5-4 2010

A.6.2.8 Connection verification

A.6.2.8.1 Common description

A.6.2.8.2 Number of connections and connectors

A.6.2.8.3 Wire mapping

A.6.2.9 Terminators

A.6.2.9.1 Common description

A.6.2.9.2 Specific requirements for CPs

Not applicable.

A.6.2.10 Coding and labelling verification

A.6.2.11 Verification report

A.6.3 Installation acceptance test

A.6.3.1 General

A.6.3.2 Acceptance test of Ethernet based cabling

Not applicable.

A.6.3.3 Acceptance test of non Ethernet based cabling

A.6.3.3.1 Copper cabling for non Ethernet based CPs

A.6.3.3.1.1 Common description

A.6.3.3.1.2 Specific requirements for copper cabling for non Ethernet based CPs

Addition:

When bus cables with 2 x twisted pairs are used, check that the pair interconnecting 'S' terminals are connected to earth in one point only.

A.6.3.3.2 Optical fibre cabling for non Ethernet based CPs

Not applicable.

A.6.3.3.3 Specific requirements for generic cabling in accordance with ISO/IEC 24702

A.6.3.4 Specific requirements for wireless installation

Not applicable.

A.6.3.5 Acceptance test report

A.7 Installation administration

Subclause 7.8 is not applicable.

Documents
Document Sharing Hub

Full document details: IEC 61784-5-4 2010