IEC 61786-1

Edition 1.1 2024-07
CONSOLIDATED VERSION

INTERNATIONAL STANDARD

colour inside

HORIZONTAL PUBLICATION

Measurement of DC magnetic, AC magnetic and AC electric fields from 1 Hz to 100 kHz with regard to exposure of human beings – Part 1: Requirements for measuring instruments

IEC 61786-1:2013-12+AMD1:2024-07 CSV(en)

Documents
Document Sharing Hub

Full document details: IEC 61786-1-2024

THIS PUBLICATION IS COPYRIGHT PROTECTED
Copyright © 2024 IEC, Geneva, Switzerland

All rights reserved. Unless otherwise specified, no part of this publication may be reproduced or utilized in any form or by any means, electronic or mechanical, including photocopying and microfilm, without permission in writing from either IEC or IEC's member National Committee in the country of the requester. If you have any questions about IEC copyright or have an enquiry about obtaining additional rights to this publication, please contact the address below or your local IEC member National Committee for further information.

IEC Secretariat
3, rue de Varembé
CH-1211 Geneva 20
Switzerland

Tel.: +41 22 919 02 11
info@iec.ch
www.iec.ch

About the IEC
The International Electrotechnical Commission (IEC) is the leading global organization that prepares and publishes International Standards for all electrical, electronic and related technologies.

About IEC publications
The technical content of IEC publications is kept under constant review by the IEC. Please make sure that you have the latest edition, a corrigendum or an amendment might have been published.

IEC publications search - webstore.iec.ch/advsearchform
The advanced search enables to find IEC publications by a variety of criteria (reference number, text, technical committee, …). It also gives information on projects, replaced and withdrawn publications.

IEC Just Published - webstore.iec.ch/justpublished
Stay up to date on all new IEC publications. Just Published details all new publications released. Available online and once a month by email.

IEC Customer Service Centre - webstore.iec.ch/csc
If you wish to give us your feedback on this publication or need further assistance, please contact the Customer Service Centre: sales@iec.ch.

IEC Products & Services Portal - products.iec.ch
Discover our powerful search engine and read freely all the publications previews, graphical symbols and the glossary. With a subscription you will always have access to up to date content tailored to your needs.

Electropedia - www.electropedia.org
The world's leading online dictionary on electrotechnology, containing more than 22 500 terminological entries in English and French, with equivalent terms in 25 additional languages. Also known as the International Electrotechnical Vocabulary (IEV) online.

Documents
Document Sharing Hub

Full document details: IEC 61786-1-2024

IEC 61786-1

Edition 1.1 2024-07
CONSOLIDATED VERSION

INTERNATIONAL STANDARD

colour inside

HORIZONTAL PUBLICATION

Measurement of DC magnetic, AC magnetic and AC electric fields from 1 Hz to 100 kHz with regard to exposure of human beings – Part 1: Requirements for measuring instruments

INTERNATIONAL
ELECTROTECHNICAL
COMMISSION

ICS 17.220.20

ISBN 978-2-8322-9461-1

Warning! Make sure that you obtained this publication from an authorized distributor.

® Registered trademark of the International Electrotechnical Commission

Documents
Document Sharing Hub

Full document details: IEC 61786-1-2024

CONTENTS

FOREWORD 5
1 Scope 7
2 Normative references 7
3 Terms and definitions 8
3.1 Meters 8
3.2 Meter characteristics 9
3.3 Field characteristics 10
3.4 Measurements 11
4 Symbols 12
5 Instrumentation specifications 13
5.1 General 13
5.2 Measurement uncertainty 13
5.3 Magnitude range 14
5.4 Pass-band 14
5.5 Operating temperature and humidity ranges 14
5.6 Power supplies 14
5.7 Readability of scale 15
5.8 Instrument dimensions and choice of probe 15
5.8.1 General ~~schema~~ schematic 15
5.8.2 Magnetic field meter 15
5.8.3 Electric field meter 16
5.8.4 Support for electric field meter 16
5.9 Electromagnetic compatibility 16
5.9.1 Immunity 16
5.9.2 Emissions 17
5.10 Crest factor 18
5.11 Durability 18
5.12 Weight 19
5.13 Instrumentation choice 19
6 Calibration 19
6.1 General 19
6.2 Calibration procedure 19
6.2.1 General 19
6.2.2 Magnetic field calibration system 19
6.2.3 Electric field calibration system 20
6.2.4 Three-axis probes calibration 20
6.2.5 Calibration values 21
6.2.6 Calibration uncertainty 21
6.3 Calibration documentation 22
7 Verification 23
Annex A (normative) Calibration methods 24
A.1 Calibration of magnetic flux density meters 24
A.1.1 Using magnetic field generation 24
A.1.2 Voltage injection method 28
A.1.3 Comparison with reference magnetic field meter 29
A.2 Calibration of electric field strength meters 30

AVA Documents
Document Sharing Hub
Full document details: IEC 61786-1-2024

A.2.1 Electric field generation method 30
A.2.2 Current injection method 34
A.2.3 Comparison with electric field reference 34
Annex B (informative) Example of calibration uncertainty 35
Annex C (informative) General characteristics of magnetic and electric fields 37
C.1 General 37
C.2 Polarisation 37
C.3 Characteristics of magnetic field 38
C.4 Characteristic of electric field 39
Annex D (informative) Magnetic flux density meters (magnetic field meters) 41
D.1 General characteristics of magnetic field meters 41
D.2 Theory of operation (coil probes) 42
D.3 Static magnetic field-measuring instrumentation 44
Annex E (informative) Electric field strength meters (electric field meters) 45
E.1 General characteristics of electric field meters 45
E.2 Theory of operation 45
E.2.1 Free-body meters 45
E.2.2 Ground reference meters 47
Annex F (informative) Influence of humidity on electric field measurement 49
F.1 Measurement conditions 49
F.2 Results 49
Annex G (informative) Units 51
G.1 Units 51
G.2 SI units and SI derived units 51
G.3 Useful physical constants 51
Bibliography 52

Figure 1 – ~~Schema~~ Schematic of a field meter 15
Figure 2 – Insulating tripod and offset rod for an electric field probe (photograph *RTE*) 16
Figure 3 – Electric field measurement using a hand-held stick (photograph *RTE*) 16
Figure A.1 – Deviation in percentage departure of calculated axial field [7] 24
Figure A.2 – Coordinate system and geometry of rectangular loop of many turns of wire (see Equation (A. 1)) 25
Figure A.3 – Circular Helmholtz coils 26
Figure A.4 – Deviation in percentage of calculated B_Z from centre value (see Equation (A.4)) 27
Figure A.5 – Schematic view of a circuit for calibration of magnetic field meter using a square loop to produce a known field 27
Figure A.6 – Diagram for voltage injection technique 29
Figure A.7 – Calculated normalized electric field at plate surfaces and midway between plates as a function of the normalized distance from the edge of the plate 30
Figure A.8 – Parallel plates system for calibrating free-body electric field meters 32
Figure A.9 – Arrangement with parallel plates orientated perpendicular to the floor 33
Figure A.10 – Diagram for current injection technique 34
Figure C.1 – Oscillating and rotating field quantities for cases of elliptical polarization, linear polarization, and circular polarization 38
Figure C.2 – Magnetic field from current in straight and circular conductors 39

AVA Documents
Document Sharing Hub
Full document details: IEC 61786-1-2024

Figure C.3 – Perturbation of electric field distribution by a person (from IEC 62226-3-1) 40
Figure C.4 – Proximity effect with a 25 kV line and a building (from IEC 62110) 40
Figure D.1 – Schematic view of simple magnetic field meter with coil-type probe 41
Figure D.2 – Approximate equivalent circuit of a coil probe when connected to the detector 43
Figure E.1 – Single-axis free-body meter geometries 46
Figure E.2 – Designs for flat plate probes used with ground-referenced electric field meters 47
Figure F.1 – Test in the climatic chamber with the normal tripod (left) and the offset tripod (right) (photograph EDF R&D) 49
Figure F.2 – E field measured as a function of the humidity with a normal tripod 50
Figure F.3 – E field measured as a function of the humidity with an offset tripod 50

Table 1 – Mains terminal disturbance voltage limits for class B group 1 equipment measured on a test site 18
Table A.1 – Calculated normalized electric field values midway between plates and at plate surfaces 32
Table B.1 – Example of uncertainty calculation 35

Documents
Document Sharing Hub
Full document details: IEC 61786-1-2024

© IEC 2024

INTERNATIONAL ELECTROTECHNICAL COMMISSION

MEASUREMENT OF DC MAGNETIC, AC MAGNETIC AND AC ELECTRIC FIELDS FROM 1 Hz TO 100 kHz WITH REGARD TO EXPOSURE OF HUMAN BEINGS –

Part 1: Requirements for measuring instruments

FOREWORD

1) The International Electrotechnical Commission (IEC) is a worldwide organization for standardization comprising all national electrotechnical committees (IEC National Committees). The object of IEC is to promote international co-operation on all questions concerning standardization in the electrical and electronic fields. To this end and in addition to other activities, IEC publishes International Standards, Technical Specifications, Technical Reports, Publicly Available Specifications (PAS) and Guides (hereafter referred to as "IEC Publication(s)"). Their preparation is entrusted to technical committees; any IEC National Committee interested in the subject dealt with may participate in this preparatory work. International, governmental and non-governmental organizations liaising with the IEC also participate in this preparation. IEC collaborates closely with the International Organization for Standardization (ISO) in accordance with conditions determined by agreement between the two organizations.
2) The formal decisions or agreements of IEC on technical matters express, as nearly as possible, an international consensus of opinion on the relevant subjects since each technical committee has representation from all interested IEC National Committees.
3) IEC Publications have the form of recommendations for international use and are accepted by IEC National Committees in that sense. While all reasonable efforts are made to ensure that the technical content of IEC Publications is accurate, IEC cannot be held responsible for the way in which they are used or for any misinterpretation by any end user.
4) In order to promote international uniformity, IEC National Committees undertake to apply IEC Publications transparently to the maximum extent possible in their national and regional publications. Any divergence between any IEC Publication and the corresponding national or regional publication shall be clearly indicated in the latter.
5) IEC itself does not provide any attestation of conformity. Independent certification bodies provide conformity assessment services and, in some areas, access to IEC marks of conformity. IEC is not responsible for any services carried out by independent certification bodies.
6) All users should ensure that they have the latest edition of this publication.
7) No liability shall attach to IEC or its directors, employees, servants or agents including individual experts and members of its technical committees and IEC National Committees for any personal injury, property damage or other damage of any nature whatsoever, whether direct or indirect, or for costs (including legal fees) and expenses arising out of the publication, use of, or reliance upon, this IEC Publication or any other IEC Publications.
8) Attention is drawn to the Normative references cited in this publication. Use of the referenced publications is indispensable for the correct application of this publication.
9) IEC draws attention to the possibility that the implementation of this document may involve the use of (a) patent(s). IEC takes no position concerning the evidence, validity or applicability of any claimed patent rights in respect thereof. As of the date of publication of this document, IEC had not received notice of (a) patent(s), which may be required to implement this document. However, implementers are cautioned that this may not represent the latest information, which may be obtained from the patent database available at https://patents.iec.ch. IEC shall not be held responsible for identifying any or all such patent rights.

This consolidated version of the official IEC Standard and its amendment has been prepared for user convenience.

IEC 61786-1 edition 1.1 contains the fifth edition (2013-12) [documents 106/292/FDIS and 106/298/RVD] and its amendment 1 (2024-07) [documents 106/647/FDIS and 106/655/RVD].

In this Redline version, a vertical line in the margin shows where the technical content is modified by amendment 1. Additions are in green text, deletions are in strikethrough red text. A separate Final version with all changes accepted is available in this publication.

Documents
Document Sharing Hub
Full document details: IEC 61786-1-2024

International Standard IEC 61786-1 has been prepared by IEC technical committee 106: Methods for the assessment of electric, magnetic and electromagnetic fields associated with human exposure.

The first editions of IEC 61786-1 and IEC 61786-2 replace IEC 61786:1998. Part 1 deals with measuring instruments, and Part 2 deals with measurement procedures. The content of the standard was revised in order to give up-to-date and practical information to the user.

It has the status of a horizontal standard in accordance with IEC Guide 108.

This publication has been drafted in accordance with the ISO/IEC Directives, Part 2.

A list of all parts of the IEC 61786 series, published under the general title *Measurement of DC magnetic fields and AC magnetic and electric fields from 1 Hz to 100 kHz with regard to exposure of human beings,* can be found on the IEC website.

The committee has decided that the contents of this document and its amendment will remain unchanged until the stability date indicated on the IEC website under webstore.iec.ch in the data related to the specific document. At this date, the document will be

- reconfirmed,
- withdrawn, or
- revised.

IMPORTANT – The 'colour inside' logo on the cover page of this publication indicates that it contains colours which are considered to be useful for the correct understanding of its contents. Users should therefore print this document using a colour printer.

Documents
Document Sharing Hub

Full document details: IEC 61786-1-2024

MEASUREMENT OF DC MAGNETIC, AC MAGNETIC AND AC ELECTRIC FIELDS FROM 1 Hz TO 100 kHz WITH REGARD TO EXPOSURE OF HUMAN BEINGS –

Part 1: Requirements for measuring instruments

1 Scope

This part of IEC 61786 provides guidance for measuring instruments used to measure the field strength of quasi-static magnetic and electric fields that have a frequency content in the range 1 Hz to 100 kHz and with DC magnetic fields to evaluate the exposure levels of the human body to these fields.

Sources of fields include devices that operate at power frequencies and produce power frequency and power frequency harmonic fields, as well as devices that produce fields within the frequency range of this document, including devices that produce static fields, and the earth's static magnetic field. The magnitude ranges covered by this standard are 0,1 μT to 200 mT in AC (1 μT to 10 T in DC) and 1 V/m to 50 kV/m for magnetic fields and electric fields, respectively.

When measurements outside this range are performed, most of the provisions of this standard will still apply, but special attention should be paid to specified uncertainty and calibration procedures.

Specifically, this standard

– defines terminology;
– identifies requirements on field meter specifications;
– indicates methods of calibration;
– defines requirements on instrumentation uncertainty;
– describes general characteristics of fields;
– describes operational principles of instrumentation.

NOTE Measurement methods that achieve defined goals pertaining to assessment of human exposure are described in IEC 61786-2

Sources of uncertainty during calibration are also identified. In regard to electric field measurements, this standard considers only the measurement of the unperturbed electric field strength at a point in free space (i.e. the electric field prior to the introduction of the field meter and operator) or above conducting surfaces.

This horizontal standard is primarily intended for use by technical committees in the preparation of standards in accordance with the principles laid down in IEC Guide 108.

One of the responsibilities of a technical committee is, wherever applicable, to make use of horizontal standards in the preparation of its publications. The contents of this horizontal standard will not apply unless specifically referred to or included in the relevant publications.

2 Normative references

The following documents, in whole or in part, are normatively referenced in this document and are indispensable for its application. For dated references, only the edition cited applies. For

AVA Documents
Document Sharing Hub
Full document details: IEC 61786-1-2024

undated references, the latest edition of the referenced document (including any amendments) applies.

IEC 61000-3-2, *Electromagnetic compatibility (EMC) – Part 3-2: Limits – Limits for harmonic current emissions (equipment input current ≤ 16 A per phase)*

IEC 61000-4-2, *Electromagnetic compatibility (EMC) – Part 4-2: Testing and measurement techniques – Electrostatic discharge immunity test*

IEC 61000-4-3, *Electromagnetic compatibility (EMC) - Part 4-3 : Testing and measurement techniques - Radiated, radio-frequency, electromagnetic field immunity test*

IEC 61000-4-4, *Electromagnetic compatibility (EMC) – Part 4-4: Testing and measurement techniques – Electrical fast transient/burst immunity test*

IEC 61000-4-6, *Electromagnetic compatibility (EMC) – Part 4-6: Testing and measurement techniques – Immunity to conducted disturbances, induced by radio-frequency fields*

IEC 61000-4-8, *Electromagnetic compatibility (EMC) – Part 4-8: Testing and measurement techniques – Power frequency magnetic field immunity test*

IEC 61000-6-1:2016, *Electromagnetic compatibility (EMC) – Part 6-1: Generic standards – Immunity standard for residential, commercial and light-industrial environments*

CISPR 11, *Industrial, scientific and medical equipment – Radio-frequency disturbance characteristics – Limits and methods of measurement*

ISO/IEC Guide 98-3, *Uncertainty of measurement – Part 3: Guide to the expression of uncertainty in measurement* (GUM:1995)

Guide 108, *Guidelines for ensuring the coherency of IEC publications – Application of horizontal standards*

3 Terms and definitions

For the purposes of this document, the following terms and definitions apply.

NOTE 1 Internationally accepted SI-units are used throughout the standard.

NOTE 2 For other units, see Annex G.

NOTE 3 Throughout this standard, the words "magnetic flux density" and "magnetic field" will be considered synonymous.

3.1 Meters

3.1.1
measuring instrument
device intended to be used to make measurements, alone or in conjunction with supplementary devices

[SOURCE: IEC 60050-300:2001, 311-03-01]

3.1.2
field meter
meter designed to measure electric, magnetic and electromagnetic fields

Note 1 to entry: Field meters usually consist of three parts: the probe, the detector circuit and the display.

Documents
Document Sharing Hub
Full document details: IEC 61786-1-2024

3.1.3
probe
input device of a measuring instrument, generally made as a separate unit and connected to it by means of a flexible cable, which transmits the measurand in a suitable form

Note 1 to entry: A probe can be composed of one or several sensors.

[SOURCE: IEC 60050-300:2001, 313-09-11, modified – a note to entry has been added.]

3.1.4
detector
device for discerning the existence or variations of waves, oscillations or signals, usually for extracting information conveyed.

EXAMPLES Peak detector, rms detector

[SOURCE: IEC 60050-702:1992, 702-09-39, modified – the examples are different.]

3.1.5
free-body meter
meter that measures the unperturbed electric field strength at a point above the ground and is supported in space without conductive contact to ground

3.1.6
fluxgate magnetometer
instrument designed to measure magnetic fields by making use of the non-linear magnetic characteristics of a probe or sensing element that has a ferromagnetic core

3.1.7
ground reference meter
meter that measures the electric field at or close to the surface of the ground, frequently implemented by measuring the induced current or charge oscillating between an isolated electrode and ground.

Note 1 to entry: The isolated electrode is usually a plate located at ground level or slightly above the ground surface.

3.1.8
survey meter
lightweight battery-operated meter that gives a real time read-out and that can be held conveniently by hand in order to conduct survey type measurements in different locations

3.1.9
coil probe
magnetic flux density sensor comprised of a coil of wire that produces an induced voltage proportional to the time derivative of the magnetic field

3.1.10
Hall effect probe
magnetic flux density sensor containing an element exhibiting the Hall effect to produce a voltage proportional to the magnetic flux density

3.2 Meter characteristics

3.2.1
crest factor
ratio of the maximum absolute value of an alternating quantity to its root-mean-square value

[SOURCE: IEC 60050-103:2009, 103-14-57, modified – the original term was "peak factor" and the note has been deleted.]

AVA Documents
Document Sharing Hub
Full document details: IEC 61786-1-2024

3.2.2
crosstalk
the appearance of undesired energy in a channel, owing to the presence of a signal in another channel, caused by, for example induction, conduction or non-linearity

[SOURCE: IEC 60050-722:1992, 722-15-03]

3.2.3
frequency response
for a linear time-invariant system with a sinusoidal input variable in steady state the ratio of the phasor of the output variable to the phasor of the corresponding input variable, represented as a function of the angular frequency ω

[SOURCE: IEC 60050-351:2006, 351-24-33, modified – the note in the original has been deleted.]

3.2.4
isotropy of the probe
a measure of the degree to which the response of a field probe is independent of the polarization and direction of propagation of the incident field

3.2.5
pass-band
frequency band throughout which the attenuation is less than a specified value

[SOURCE: IEC 60050-151:2001, 151-13-52]

3.2.6
root-mean-square value
rms value
1) for n quantities x_1, x_2,...x_n, positive square root of the mean value of their squares:

$$X_q = \left[\frac{1}{n}\left(x_1^2 + x_2^2 + \ldots + x_n^2\right)\right]^{1/2} \quad (1)$$

2) for a quantity x depending of a variable t, positive square root of the mean value of the square of the quantity taken over a given interval [t_0, t_0+T] of the variable

$$X_q = \left[\frac{1}{T}\int_{t_0}^{t_0+T}\left[x(t)\right]^2 dt\right]^{1/2} \quad (2)$$

Note 1 to entry: The rms value of a periodic quantity is usually taken over an integration interval the range of which is the period multiplied by a natural number

[SOURCE: IEC 60050-103:2009, 103-02-02, modified – the second note in the original definition has been deleted.]

3.3 Field characteristics

3.3.1
unperturbed field
field at a point that would exist in the absence of persons or movable objects

Documents
Document Sharing Hub
Full document details: IEC 61786-1-2024

3.3.2

nearly uniform field
field in area where the resultant field over the cross-sectional area of the probe does not change more than 1%

3.3.3
quasi-static field

field that satisfies the condition $f << \frac{c}{l}$ (i.e. wavelength >> l), where f is the frequency of the field, c is the speed of light, and l is a characteristic dimension of the measurement geometry, e.g. the distance between the field source and the measurement point

Note 1 to entry: Power frequency magnetic and electric fields near power lines and appliances are examples of quasi-static fields.

3.3.4
resultant field
field given by the expression

$$F_R = \sqrt{F_x^2 + F_y^2 + F_z^2} \quad (3)$$

where F_x, F_y, and F_z are the rms values of the three orthogonal field components,

or by the expression

$$F_R = \sqrt{F_{max}^2 + F_{min}^2} \quad (4)$$

where F_{max} and F_{min} are the rms values of the semi-major and semi-minor axes of the field ellipse, respectively.

Note 1 to entry: The resultant F_R is always $\geq F_{max}$. If the field is linearly polarized, F_{min} = 0 and $F_R = F_{max}$. If the field is circularly polarized, $F_{max} = F_{min}$ and $F_R \approx 1{,}41\ F_{max}$.

3.4 Measurements

3.4.1
correction factor
numerical factor by which the uncorrected result of a measurement is multiplied to compensate for a known error

Note 1 to entry: Since the known error cannot be determined perfectly, the compensation cannot be complete.

3.4.2
coverage factor
numerical factor used as a multiplier of the combined standard uncertainty in order to obtain an expanded uncertainty

Note 1 to entry: For a quantity z described by a normal distribution with expectation μ_z and standard deviation σ, the interval $\mu_z \pm k\sigma$ encompasses 68,27 %, 95,45 % and 99,73 % of the distribution for a coverage factor k = 1, 2 and 3, respectively.

3.4.3
scale factor
factor by which the instrument reading is multiplied to obtain its input quantity

3.4.4
standard uncertainty
uncertainty of the result of a measurement expressed as a standard deviation

Documents
Document Sharing Hub
Full document details: IEC 61786-1-2024

3.4.5
uncertainty of calibration
parameter, associated with the result of a calibration, that characterizes the dispersion of the values that could reasonably be attributed to the measurand

Note 1 to entry: Uncertainty of calibration generally comprises many components. Some of these components may be estimated on the basis of the statistical distribution of the results of series of measurements, and can be characterized by experimental standard deviations. Estimates of other components can be based on experience or other information.

4 Symbols

a	=	radius of coil probe; radius of spherical electric field probe
$2a$, $2b$	=	side dimensions of rectangular coil
$\boldsymbol{B}$	=	magnetic flux density vector
B_0	=	amplitude of alternating magnetic field
B_R	=	resultant magnetic field
B_z	=	axial magnetic flux density
C	=	stray capacitance of coil probe
d	=	spacing of parallel plates; distance from electromagnetic field source; spacing of Helmholtz coils
$\boldsymbol{D}$	=	electric displacement vector
E	=	electric field strength
E_0	=	uniform electric field strength
F_{max}, F_{min}	=	rms values of semi-major and semi-minor axes of field ellipse
I	=	current to magnetic field coils
L	=	inductance of coil probe
N	=	number of turns of wire (magnetic field coil system)
Q	=	induced charge
r	=	distance between magnetic field source and measurement location; resistance of coil probe and leads
R	=	approximate input impedance of detector circuit (magnetic field meter); radius of Helmholtz coils
S	=	electrode surface area (electric field meter)
t	=	time
T	=	period of periodic signal
V	=	voltage
Z	=	impedance in current injection circuit
λ	=	wave length
ε_0	=	permittivity of free space
μ_0	=	permeability of free space
ϕ	=	magnetic flux
ω	=	angular frequency of alternating field

Documents
Document Sharing Hub
Full document details: IEC 61786-1-2024

5 Instrumentation specifications

5.1 General

When measuring field in the context of assessment of human exposure, the following items are considered below:

– measurement of the resultant field strength;

– measurement of the unperturbed electric field.

NOTE 1 Other items may be required depending on the goal of the measurement.

The various types of instrumentation available for characterizing quasi-static magnetic fields are described in Clause D.1.

The various types of instrumentation available for characterizing static magnetic fields are described in Clause D.3

Several types of magnetic field meters are in common use, e.g. field meters with coil probes, meters with Hall-effect probes, and meters that combine two coils with a ferromagnetic core as in a fluxgate magnetometer.

NOTE 2 Hall effect probes respond to static as well as time-varying magnetic flux densities. Due to limited sensitivity and saturation problems sometimes encountered when attempting to measure small power frequency flux densities in the presence of the substantial static geomagnetic flux of the earth, Hall-effect probes have seldom been used to measure magnetic fields of a.c. power lines.

The various types of instrumentation available for characterizing quasi-static electric fields are described in Clause E.1. The following two types of electric field meters are considered in this standard:

a) the free-body meter;

b) the ground reference meter.

Sufficient information shall be provided with the instrumentation, including instrument specifications and a clearly written instruction manual, to enable users to determine compliance with this standard, to aid them in the proper operation of the field meter, and to assess the usefulness of the device for the user's application. The instrument specifications that shall be provided and/or satisfied are given below.

5.2 Measurement uncertainty

The measurement uncertainty of the measuring instrument shall be specified by the manufacturer of the instrument. The measurement uncertainty shall be determined following the ISO/IEC Guide 98-3. The uncertainty shall be specified as an extended measurement uncertainty using a coverage factor of 2. The uncertainty is valid after available correction factors are applied. The uncertainty shall contain all components which are relevant when the instrument is used in a nearly uniform field. Such components may be calibration uncertainty, frequency response, deviations of the gain in different measurement range settings, isotropy of the probe, internal noise sources, non-linearity, stability, temperature response and humidity response. The uncertainty of the instrument does not include effects due to the handling of the instrument like positioning the probe in a non-uniform field or the influence of the measuring person on the field to be measured. Such components must be taken into account as additional uncertainties in the measurement report.

NOTE 1 At power frequency, the uncertainty of measuring instrument is usually 10 % or better.

NOTE 2 Examples of guidelines on the treatment of calibration uncertainties are given in Annex B.

Documents
Document Sharing Hub

Full document details: IEC 61786-1-2024

5.3 Magnitude range

The magnitude range over which the instrument operates within the specified uncertainty shall be clearly indicated.

5.4 Pass-band

Broadband measuring instruments in the AC range always have a lower and an upper cut off frequency, which define a pass band. Normally the pass band limits are defined by the minus 3 dB point of the frequency response. The nominal frequency response of an instrument can be described as the frequency response of a system with a high pass filter and a low pass filter connected in series. The filter types and the filter orders should be specified (e.g. 3rd order Butterworth high pass and 5th order Butterworth low pass). The nominal frequency response of the instrument is normally not treated as a source of measurement uncertainty because the band limiting effect of the filters is a desired property of the instrument if broadband measurements are made. In frequency selective measurements (e.g. FFT) the band limiting effect of the filters is not desired and the nominal frequency response should be automatically corrected. The measurement uncertainty of an instrument due to manufacturing tolerances is normally greater at the band limits compared to medium frequencies. Therefore the measurement uncertainty of an instrument is often specified also and sometimes only in a restricted frequency range. This range is not as broad as the pass band but ~~should~~ shall be still broad enough to cover all frequencies of interest. In the restricted frequency range the influence of the nominal frequency response shall be negligible.

5.5 Operating temperature and humidity ranges

The temperature and relative humidity ranges over which the instrument operates within the specified uncertainty shall be at least -10 °C to 45 °C and 5 % to 95 %, respectively. Sudden temperature changes that can lead to condensation in the instrument should be avoided.

Electric field measurement may be perturbed if the relative humidity is more than 70 % due to condensation effect on the probe and support [2] [1]. Since the effect of humidity depends on the field meter, the ability of the field meter to work correctly under those conditions should be checked before measurement (see Annex F).

5.6 Power supplies

The use of measurement equipment that is operating on internal battery power is recommended.

If batteries are used, provision should be made to indicate whether the battery condition is adequate for proper operation of the field meter. Instruments used to record personal exposure should be capable of at least 8 h operation within their rated uncertainty before replacement or recharging of the batteries becomes necessary.

If rechargeable batteries are used it is recommended that the instrumentation is not operated while connected to the charging station. When such connections are necessary, it should be demonstrated that stray fields from the battery charger, conducted disturbances from the mains voltage and electromagnetic coupling via the connecting leads (to the battery charger) do not affect the measurement (see 5.9).

There shall be no wire connections to electric field free-body meters.

If batteries with ferromagnetic jackets are used in exposure meters, care must be exercised that the jackets do not significantly influence readings by the instrument (see IEC 61786-2 for more details about source of measurement uncertainty).

---

[1] Numbers in square brackets refer to the Bibliography.

Documents
Document Sharing Hub
Full document details: IEC 61786-1-2024

5.7 Readability of scale

~~The display of the meter, if applicable, should be digital.~~

Remote displays shall be used to avoid perturbation of the electric field by the observer.

~~The meter digital displays of magnetic field survey meters should be large enough to be easily read at arm's length.~~ If more than one range of sensitivity is provided, the full scale value of the selected range should be indicated, and the units should be readily interpretable. For auto-ranging instrumentation, the magnitude range may be indicated elsewhere, e.g. in the user manual. The instrumentation should provide a clear indication of the units being displayed.

5.8 Instrument dimensions and choice of probe

5.8.1 General ~~schema~~ schematic

A general ~~schema~~ schematic of a meter is given in Figure 1.

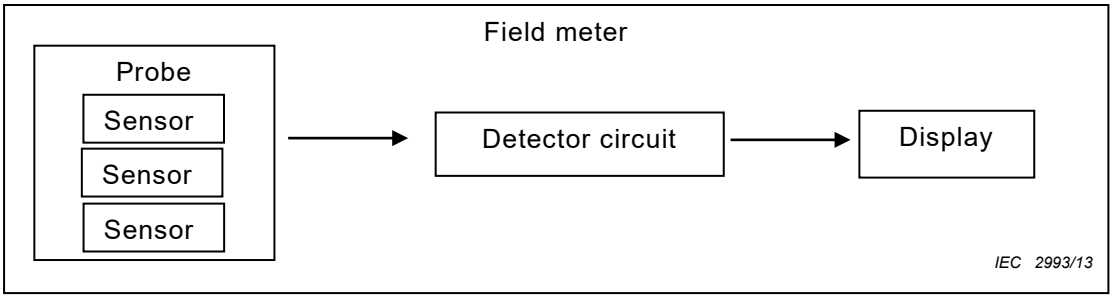

Figure 1 – ~~Schema~~ Schematic of a field meter

The probes should be three-axis. For the weighted peak method (see IEC 61786-2:2014, 4.2.3), three-axis probes shall be used.

NOTE Single-axis probes can be used to measure the rms values of the semi-major axes of the field ellipse by orienting the probe until a maximum reading is obtained. Single-axis meters can also be used to determine the resultant magnetic field by measuring the rms values of three orthogonal spatial components and combining them according to Equation (3). It is assumed that during this procedure there are no significant changes in the rms values of the spatial components. Single axis use is suitable for electric field measurement referenced to conducting surface.

5.8.2 Magnetic field meter

The dimensions of the meter should be provided.

The size of the probe should be appropriate to the spatial variation of the field measured. The probe shall be of area 0,01 m^2, or smaller. With three-axis probes, the three sensors may be concentric or, if the sensors are no larger than 0,05 m, they should be as close together as possible. The maximum dimension of the space containing the three sensors combined shall not exceed 0,2 m.

Coil probes should be either circular or square in cross-section; small deviations from these shapes, for example where concentric coils cross each other, are permitted.

Since the induced voltage is proportional to the time derivative of the magnetic flux density, the detector circuit requires an integrating stage to recover the waveform of the magnetic flux density.

The locations and orientations of the sensors that are contained within the housings of magnetic field meters shall be clearly indicated on the instrument or in the instruction manual.

AVA Documents
Document Sharing Hub
Full document details: IEC 61786-1-2024

5.8.3 Electric field meter

The dimensions for electric field meters should be given in the manufacturer documentation according to meter type:

a) free-body meter: the maximum probe dimensions of the volume containing probe shall not exceed 0,2 m;

b) ground reference meter: probe dimensions and length of connecting coaxial cable.

5.8.4 Support for electric field meter

The support for the electric field meter shall be made of insulating materials, such as synthetic or composite material, or wood.

The dimension of the support depends on how the probe is supported:

– probe supported by a insulating tripod = 1m (Figure 2);

– probe supported by a standing man holding a hand-held stick = 2m (Figure 3).

IEC 2994/13

Figure 2 – Insulating tripod and offset rod for an electric field probe (photograph *RTE*)

IEC 2995/13

Figure 3 – Electric field measurement using a hand-held stick (photograph *RTE*)

5.9 Electromagnetic compatibility

5.9.1 Immunity

a) Power frequency electric field

Documents
Document Sharing Hub

Full document details: IEC 61786-1-2024

Instrumentation intended for use in the vicinity of high-voltage equipment operating at power frequencies shall not be affected significantly by ambient electric fields as large as 20 kV/m, i.e. the influence of the electric field on the magnetic field reading shall be less than 0,2 μT. This immunity requirement may need to be increased for some extreme environments where electric fields as large as 100 kV/m may exist, e.g. near high-voltage transmission line conductors.

Tests for immunity to power frequency electric fields may be performed using the parallel plates systems described in Clause A.2.

NOTE 1 The proximity effect of the instrument user can shield or enhance the electric field, depending on the geometry of the field and the location of the magnetic field meter relative to the user. For influence of user during electric field test, see IEC 61786-2

b) Power frequency magnetic field

Instrumentation intended for use in the vicinity of high-voltage equipment operating at power frequencies shall not be affected significantly by ambient magnetic fields as large as 1 mT, i.e. the influence of the magnetic field on the electric field reading shall be less than 10 V/m. Instrumentation shall be tested in accordance with the methods described in IEC 61000-4-8.

Tests for immunity to power frequency magnetic fields may be performed using the coil systems described in Clause A.1.

c) Radiated electromagnetic fields

~~The operation of instrumentation shall not be affected by electromagnetic radiation for frequencies defined in IEC 61000-4-3 for an electric field of 3 V/m rms for frequencies between 80 MHz and 2 GHz, and 1 V/m rms for higher frequencies.~~

The operation of instrumentation shall not be affected by electromagnetic radiation for frequencies defined in IEC 61000-4-3 for an electric field of 3 V/m rms for frequencies between 80 MHz and 2 GHz, and 1 V/m rms for higher frequencies.

Testing of instrumentation shall be in accord with the methods described in IEC 61000-4-3.

~~NOTE 2 In IEC 61000-4-3:2006+A2:2010 the frequency range is 80 MHz-6 GHz, intended to cover radiofrequency applications as broadcasting, radiocommunication, GSM, Wifi, etc.~~

The operation of instrumentation shall not be affected by electromagnetic radiation between 150 kHz and 80 MHz. Tests shall be conducted according to the methods described in IEC 61000-4-6 at a voltage level of 3 V rms. The instrumentation shall continue to operate normally during both of the above tests.

Battery-powered equipment (dimension $< \lambda/4$) which has no connection(s) to the ground nor to any other (non-insulated) equipment, and which will not be used during battery charging, does not need to be tested according to IEC 61000-4-6.

NOTE 3 The immunity requirements may need to be increased under certain conditions, e.g. during measurements near radio-broadcasting antennas and mobile telephones.

d) Immunity to transients

Specifications for instrumentation connected to the mains in order to carry out measurements shall also be tested at the a.c. power port (interface of field meter with external power source or AC wall outlet) for compliance with IEC 61000-4-4 (electrical fast transient) for a peak voltage of 2 kV. A temporary degradation of performance during the test which is self-recoverable is acceptable.

e) Electrostatic discharge (ESD)

During most measurement applications, electrostatic discharges to or from the instrumentation are not anticipated. However, the connectors of the instrumentation shall be immune to a contact or discharge voltage of at least 2 kV and tested in accordance with the methods described in IEC 61000-4-2. No degradation of performance shall occur.

5.9.2 Emissions

a) Harmonic emissions

AVA Documents
Document Sharing Hub

Full document details: IEC 61786-1-2024

The harmonic emissions of instrumentation with a power rating of 50 W or greater shall be restricted according to the requirements of IEC 61000-3-2 class A.

NOTE Battery operated equipment is considered to meet the requirements.

b) Conducted disturbances – 0,15 MHz to 30 MHz (instrumentation connected to AC power supply)

The conducted disturbances shall be less than the limits defined in ~~Table 1 as a function of frequency (see CISPR 11, Table 3.)~~ Table 4 of CISPR 11:2024, as reproduced in Table 1 below.

Table 1 – Mains terminal disturbance voltage limits for class B group 1 equipment measured on a test site

Frequency band MHz	**Quasi-peak** dB(μV)	**Average** dB(μV)
0,15 – 0,50	66 Decreasing linearly with logarithm of frequency to 56	56 Decreasing linearly with logarithm of frequency to 46
0,50 – 5	56	46
5 – 30	60	50
At the transition frequency, the more stringent limit shall apply		

Testing of instrumentation shall be in accordance with the methods described in CISPR 11.

c) Radiated disturbances – 30 MHz to 1 000 MHz

~~The electromagnetic emissions from instrumentation containing devices operating at frequencies of 9 kHz or higher shall be limited to the values listed below (see CISPR 11,Table 5, electromagnetic radiation disturbance limits for class B group 1 equipment measured on a test site at 10 m).~~

The electromagnetic radiated emissions from instrumentation containing devices operating at frequencies 30 MHz to 1 GHz shall be limited to the values given in Table 9 of CISPR 11:2024 for class B group 1 equipment measured on a test site at 10 m. The limits are briefly summarized below.

Quasi-peak: 30 dB (μV/m) at 10 m (30 MHz to 230 MHz)

Quasi-peak: 37 dB (μV/m) at 10 m (230 MHz to 1 000 MHz)

Testing of instrumentation shall be in accordance with the methods described in CISPR 11.

5.10 Crest factor

The measuring system shall measure correctly the true rms value of the field, even when the crest factor of the magnetic field is 3.

NOTE Many practical fields exhibit a large crest factor and the presence of a large crest factor may lead to unwanted saturation in the amplifier stages of the detector.

5.11 Durability

The indicating meter and other system components shall be rugged enough to withstand vibration and shock resulting from transport. A carrying case is desirable. The instrumentation shall be compliant with IEC 60721-3: storage class 1M2, transport class ~~2M3~~ 2M6 and operation class 7M3.

Documents
Document Sharing Hub
Full document details: IEC 61786-1-2024

5.12 Weight

The weight of the instrumentation should be provided. The weight of portable instrumentation should be kept as low as is practical to permit hand-held operation under restrictive conditions, e.g. in some industrial environments.

The weight of free-body electric field meters should be kept as low as is practical so that it can be held conveniently by hand with an insulating perch as long as 2 m.

5.13 Instrumentation choice

The choice of the measuring instrument should be made as a function of measurement procedures, especially concerning the need of information in the measurement report

Appropriate measuring instrument should be chosen in function of the field characteristics.

6 Calibration

6.1 General

Measurement systems are required to undergo calibration throughout their service life. All calibrations shall be traceable to national and international standards through an unbroken chain of calibrations, all having stated uncertainties.

The following three methods of magnetic field calibration are covered by this standard:

a) calibration by introduction of the field meter probe into a calculable magnetic field (following measurements of coil dimensions and current to the coil system);

b) calibration using a voltage injection technique;

c) calibration by comparison with a reference measurement system.

The first method ~~is the most used and~~ is detailed in 6.2.2. The other two methods, which are detailed in Annex A, can be used when a calibrated coil and measurement system are not available.

NOTE The voltage injection technique is useful for the design or manufacturing stage of the field meter.

The following method of electric field calibration is covered by this standard:

– calibration by introduction of the field meter probe into a calculable electric field (parallel plates system).

6.2 Calibration procedure

6.2.1 General

The procedures of this section should be followed, as appropriate, in all cases.

Calibration shall be performed at regular intervals. The initial interval should be of twelve months. This interval may be altered depending on the drift of the field meter response between calibrations and also depending on the conditions of use.

6.2.2 Magnetic field calibration system

For calibration of the higher magnitude ranges (i.e. ranges not significantly influenced by background magnetic fields), the magnetic field probe shall be placed in a nearly uniform field produced by a coil system (see Clause A.1). Each sensor axis, in turn, shall coincide with the axis of the coil system and the largest departure of the field from the central value shall be less than 1 % over the cross-sectional area of the probe.

AVA Documents
Document Sharing Hub
Full document details: IEC 61786-1-2024

Information on fields generated by rectangular, square, and circular loop systems (including Helmholtz coils) is given in [7], [18], [28], [34] and A.1. For example, the magnetic flux density produced by a single square loop (of many turns of wire) 1 m × 1 m will satisfy the uniformity requirement for a probe with a 0,10 m diameter (see Clause A.1). The loop size may be scaled upwards or downwards for larger or smaller probes, respectively, to maintain the indicated level of uniformity across the probe. The calibration may also be performed using the voltage injection technique or by comparison with a reference magnetic field meter (see Clause A.1).

The field uniformity requirement during calibration may be relaxed for large probes that are used for determining average values of non-uniform fields and, or for applications where spatial resolution requirements are not considered important. In this case, the largest departure of the calibration field from the central value should be ≤1,5 % over the cross-sectional area of the probe. For example, the field produced by a square loop 1,3 m × 1,3 m will satisfy this uniformity requirement for a probe with a 0,20 m diameter.

Calibrations of each axis of three-axis field meters shall be performed with sinusoidal magnetic fields or their equivalent voltages (voltage injection technique) at the levels and frequencies indicated by the instrument specifications. The current to the calibration coils shall be nearly free (total harmonic distortion < 1 %) of harmonic content.

6.2.3 Electric field calibration system

During calibration, the field meter probe shall be placed in a nearly uniform field produced with parallel plates according to meter type, as described in Clause A.2. The departure of the field at the centre of the parallel plates from the uniform field value, i.e. the field produced by infinite parallel plates, shall be less than 1 % (see Clause A.2). The parallel plate spacing shall be sufficient to avoid proximity effects when the field meter probe is introduced between the plates (see Clause A.2). For example, free-body meters with no diagonal dimension greater than 0,23 m may be calibrated at the centre of parallel plates 1,5 m × 1,5 m × 0,75 m spacing. The parallel plate dimensions may be scaled upward or downward for larger or smaller free-body meters. Each sensor axis, in turn, shall coincide with the direction of the electric field.

NOTE It is possible to calibrate the probe fixed on the support usually used for measurements, but not on the 3 axes of the probe (in this case, the dimension on the plates needs to be 2 m high and horizontal) – the other solution is to calibrate the probe alone on the 3 axes

Calibration of single-axis field meters and each axis of the three-axis field meters shall be performed with sinusoidal electric fields at the levels and frequencies indicated by the instrument specifications.

Energizing power supplies for the parallel-plates should provide voltages which are nearly free (total harmonic distortion ≤ 2 %) of harmonic content. Where this is not possible, the harmonic content should be recorded and it should be demonstrated that the harmonic content makes a negligible difference to the results of the calibration.

6.2.4 Three-axis probes calibration

When calibrating each axis of three-axis probes, checks for the isotropy of the probes as well as for crosstalk between the detector circuitry for each sensor shall be made. The three-axis probe and field should be configured so that the axis of each sensor can be aligned with the field direction in succession. For each alignment of the sensor, the output from the remaining two sensors should be measured and should be less than 3 % of the signal from the aligned sensor.

NOTE 1 The calibration of field meters with three-axis probes can also be checked for one orientation (at one frequency and field level) where approximately the same flux passes through all the coils.

NOTE 2 For three-axis instrumentations which are only giving the resultant of the field, this can be achieved by putting the instrument along the three axes and checking the resultant output.

AVA Documents
Document Sharing Hub
Full document details: IEC 61786-1-2024

6.2.5 Calibration values

~~At least three field levels for each measurement range of the field meter, between 30 % to 90 % of the full scale, should be recorded for meters with analogue displays. At least one point, between 10 % to 90 % of the full scale, should be obtained with field meters with digital displays.~~

At least three field levels for each measurement range of the field meter, equally spaced from 10 % to 90 % of the full scale, should be recorded for the meters.

For testing the different measurements ranges, the injection method may be needed.

Field meters with auto-ranging capabilities should be calibrated on each range at no less than one representative points inside the range.

For one field level, calibrations should be performed at three frequencies which span the pass-band, i.e. at the highest and lowest frequencies, and one intermediate frequency.

During calibration, the signal to noise ratio shall be high enough. If not, this shall be taken into account in the calibration uncertainty.

The resonant frequency of the calibration loop should be substantially greater than the calibration frequencies so that calibrations are not affected by the resonance phenomenon (see Clause A.1).

Perturbations of the calibration field due to image currents in nearby ground planes and proximity effects of ferromagnetic materials shall be made negligible (see Clause A.1).

6.2.6 Calibration uncertainty

The calibration uncertainty shall be determined following the ISO/IEC Guide 98-3.

The field in the calibration system shall be known with an uncertainty of less than ±3 % (coverage factor 1).

For a magnetic field, the magnitude may be determined by calculation based on measurements of the coil dimensions, the number of turns in the coil(s) and the current in the coils (see Clause A.1), or by direct measurement with a calibrated reference magnetic flux density meter with sufficiently low measurement uncertainty. If the voltage injection technique is used as part of the calibration (see Clause A.1), the equivalent magnetic flux density is determined by the injected voltage.

For an electric field, the magnitude may be determined by calculation based on measurements of the parallel plate spacing and voltage (see Clause A.2), or by direct measurement with a calibrated reference electric field strength meter with a sufficiently low measurement uncertainty.

The uncertainty of the calibration will be determined by such factors as the uncertainty in the value of the field value in the calibration system (± 3 %) or the uncertainty in the injected voltage, the resolution in the reading of the instrument under test, and the variation of the reading if the instrument under test is repeatedly placed into the calibration system. Other factors such as ambient background magnetic fields may further compromise the uncertainty of the calibration. The overall uncertainty of the calibration process (coverage factor 1) shall be no greater than ± (5 % + 10 nT or 1 V/m). A coverage factor of 2 shall be used when specifying expanded measurement uncertainty, i.e. the expanded measurement uncertainty would be in this case ≤ ± (10 % + 20 nT or 2V/m). The calibration shall be traceable to national and/or international standards. Guidelines on the treatment of all uncertainties and a

AVA Documents
Document Sharing Hub
Full document details: IEC 61786-1-2024

listing of the sources of uncertainty are given in 5.2 and an example is given in Annex B, respectively.

6.3 Calibration documentation

The following items should be addressed when preparing the calibration certificate, in addition to the data for the instrument specifications (see 5.2 to 5.12). Each calibration certificate shall include at least the following information, unless the laboratory has valid reasons for not doing so:

- a title (e.g. “Calibration Certificate”);
- the name and address of the laboratory, and the location where the calibrations were carried out, if different from the address of the laboratory;
- unique identification of the calibration certificate (such as the serial number), and on each page an identification in order to ensure that the page is recognized as a part of the calibration certificate and a clear identification of the end of the certificate;
- the name and address of the client;
- identification of the method or standard used;
- ~~a description of, the condition of, and unambiguous identification of the item(s) calibrated;~~
- the name and serial number, as well as a description of, and the condition of the item(s) calibrated;
- the date of receipt of the calibration item(s) where this is critical to the validity and application of the results, and the date(s) of performance of the calibration.
- reference to the procedures used by the laboratory where these are relevant to the validity or application of the results.
- the calibration results with, where appropriate, the units of measurement;
- the name(s), function(s) and signature(s) or equivalent identification of person(s) authorizing the calibration certificate.

Instrument manufacturers should also document their calibration procedures, indicating all of the following information as may be applicable:

- magnetic field coil geometry and dimensions;
- resonance frequency of coil system;
- instrumentation for measurement of current to coil system; instrumental uncertainty; date of last calibration;
- instrumentation used for voltage measurement (voltage injection technique, see Clause A.1); instrumental uncertainty; date of last calibration;
- voltage divider ratio (voltage injection technique, see Clause A.1); dependence of ratio on frequency; uncertainty in ratio value;
- parallel plate dimensions and separation;
- instrumentation for the measurement of voltage to parallel plates; instrumental uncertainty; date of last calibration;
- uncertainty of reference measurement system; probe dimensions; pass-band; date of last calibration.

This information should be made available to clients upon request. Testing laboratories should also comply with the above requirements, as applicable.

Note Further guidelines on the calibration certificate can be found in 5.10 of ISO/IEC 17025:2005 [36].

Documents
Document Sharing Hub
Full document details: IEC 61786-1-2024

7 Verification

The verification is a simple procedure to check the functionality of the field meter that should be done before using the meter. It includes:

– state of the battery:
– required accessories;
– visual inspection:
– calibration date.

Documents
Document Sharing Hub
Full document details: IEC 61786-1-2024

Annex A
(normative)

Calibration methods

A.1 Calibration of magnetic flux density meters

A.1.1 Using magnetic field generation

Calibration of a magnetic field meter is normally done by introducing the probe into a nearly uniform magnetic field of known magnitude and direction. Known magnetic fields may be produced using coil systems with circular and rectangular geometries [1], [7], [18], [25], [34]. For example, Helmholtz coils have frequently been employed to generate such fields. Comparison of field uniformity for fields produced by single square and circular coils, and square and circular Helmholtz coils are shown in Figure A.1 [7]. Figure A.1 shows the deviation of the axial magnetic field, in percentage, as a function of normalized distance from the axis of each coil system, where the distance is along a Cartesian coordinate (see Figure A.2 for the case of the single square loop). The distance is given as a percentage of the radius for the circular coils and as a percentage of half the side dimension for the square coils.

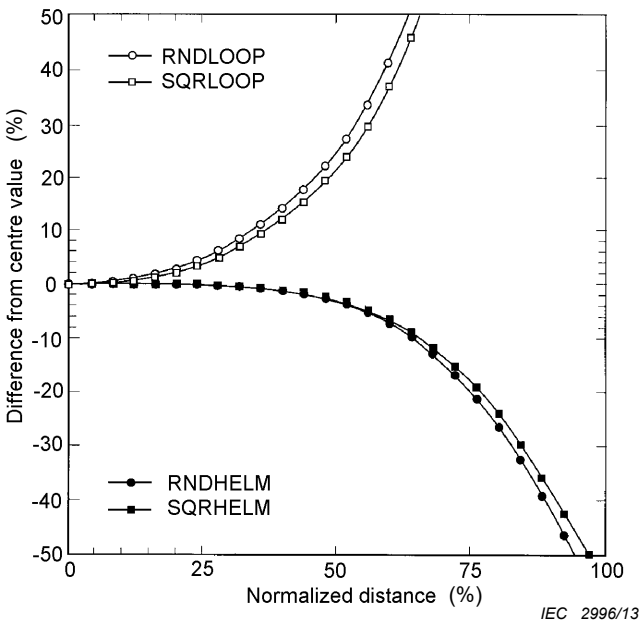

Figure A.1 – Deviation in percentage departure of calculated axial field [7]

Documents
Document Sharing Hub
Full document details: IEC 61786-1-2024

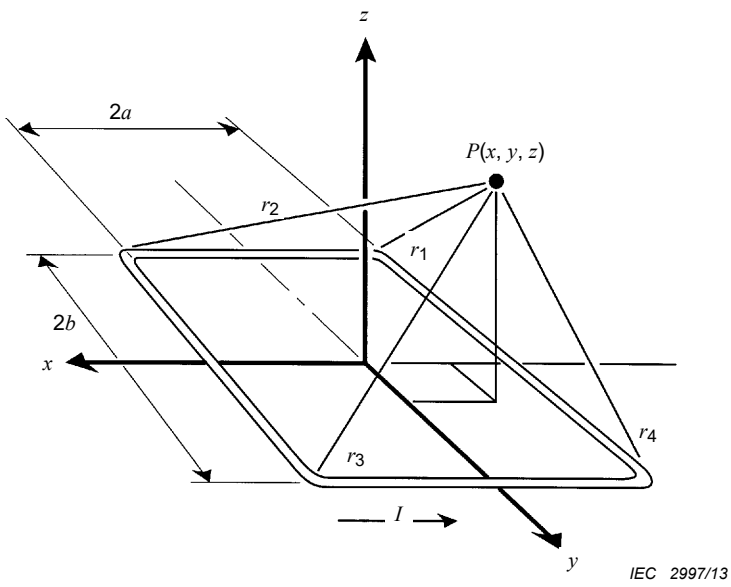

Figure A.2 – Coordinate system and geometry of rectangular loop of many turns of wire (see Equation (A. 1))

A single loop of many turns of wire with rectangular geometry used to produce the field is described below because the equations for calculating the field at all points in space are in closed form [19],[34]and the coil system is simple to construct. The simplicity of construction is at the expense of reduced field uniformity, but a sufficient uniformity for calibration purposes is readily obtained.

The *z*-component of the magnetic flux density, produced by a rectangular loop $2a \times 2b$ at a point in space $P(x,y,z)$, is given by the expression [19],[34]

$$B_z = \frac{\mu_0 IN}{4\pi} \sum_{\alpha=1}^{4} \left[\frac{(-1)^{\alpha} d_{\alpha}}{r_{\alpha}[r_{\alpha} + (-1)^{\alpha+1} C_{\alpha}]} - \frac{C_{\alpha}}{r_{\alpha}(r_{\alpha} + d_{\alpha})} \right] \tag{A.1}$$

where

N is the number of turns;

$C_1 = -C_4 = a + x;$

$C_2 = -C_3 = a - x;$

$d_1 = d_2 = b + y;$

$d_3 = d_4 = y - b;$

$r_1 = [(a + x)^2 + (b + y)^2 + z^2]^{1/2};$

$r_2 = [(a - x)^2 + (b + y)^2 + z^2]^{1/2};$

$r_3 = [(a - x)^2 + (b - y)^2 + z^2]^{1/2};$

$r_4 = [(a + x)^2 + (b - y)^2 + z^2]^{1/2};$

I is the rms current in amperes;

μ_0 is the permeability of the air;

x, y, and z are the coordinates shown in Figure A.2.

Documents
Document Sharing Hub
Full document details: IEC 61786-1-2024

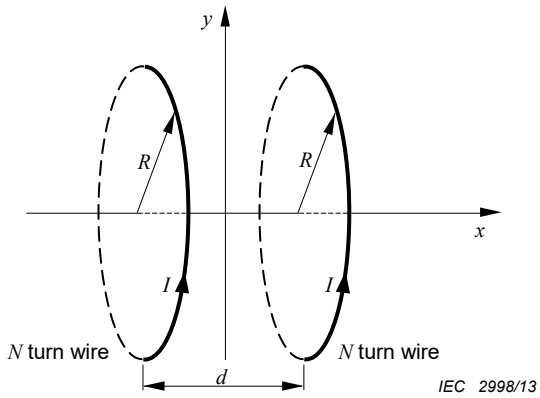

Figure A.3 – Circular Helmholtz coils

The magnetic field on the axis of circular Helmholtz coils of radius R is given by

$$B = \frac{\mu_0 NI}{2R}\left(1+\frac{\left(x+\frac{d}{2}\right)^2}{R^2}\right)^{-\frac{3}{2}} + \frac{\mu_0 NI}{2R}\left(1+\frac{\left(x-\frac{d}{2}\right)^2}{R^2}\right)^{-\frac{3}{2}} \quad \text{(A.2)}$$

N = number of turn

I = current

For $R = d$ and $x = 0$,

$$B = \frac{8\mu_0 NI}{5^{\frac{3}{2}} R} \quad \text{(A.3)}$$

The derivation of Equation (A.1) assumes that the conductors in the current loop have negligible cross-sections. It is noted for reference purposes that

$$B_z = \frac{\mu_o IN\sqrt{2}}{\pi a} \quad \text{(A.4)}$$

at the centre of a square loop of side dimension 2*a*. Equation (A.1) has been used to calculate the field values at and near the centre of a square loop of dimensions 1 m × 1 m. The percentage departure from the central magnetic field value at nearby points in the plane of the loop and at 0,03 m above and below the plane of the loop (in parentheses) are plotted in Figure A.4. Also shown in Figure A.4 is a scale drawing of a magnetic field probe 0,10 m in diameter. The departure of the magnetic field from the central value over the cross-sectional area of the 0,10 m probe is less than 1 %. Figure A.5 shows a schematic view of the probe, square calibration loop, and associated circuit for energizing the coils.

Documents
Document Sharing Hub
Full document details: IEC 61786-1-2024

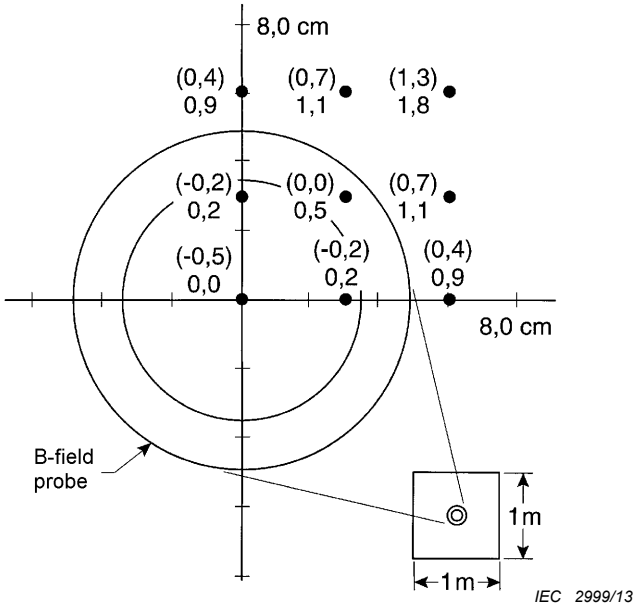

A scale drawing of a coil-type probe of 0,10 m in diameter is outlined.

Figure A.4 – Deviation in percentage of calculated B_z from centre value (see Equation (A.4))

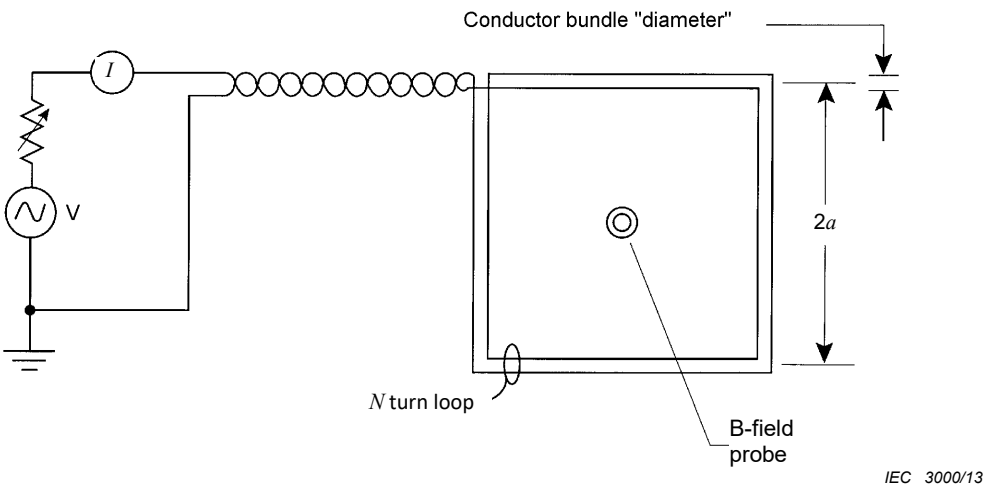

Figure A.5 – Schematic view of a circuit for calibration of magnetic field meter using a square loop to produce a known field

NOTE The uncertainty (coverage factor 1) in the value of the calibration field is determined by the uncertainties associated with calculating B_z. For example, in the case of a 1 m × 1 m square loop (see figures A.4 and A.5), the uncertainty is due to uncertainties in the measured current I, the side dimension of the loop, and the effect of non-uniformity of the magnetic field (< 0,5 % for a 0,10 m diameter probe). The uncertainty in the side dimension of the square loop can be due to a non-negligible conductor bundle cross-section. The side dimension may be taken to be the distance between the centres of the conductor bundles with an uncertainty equal to ± the conductor bundle "diameter" (see Figure A.5). The combined uncertainty in the value of the magnetic flux density is given by the square root of the sum-of-the-squares. If, for example, uncertainties in the determination of I and side dimension are ± 0,2 % and ± 1,0 %, respectively, the combined uncertainty in the value of the calibration field for the 0,10 m diameter probe is $\pm [(0,2)^2 + (1,0)^2 + (0,5)^2]^{1/2}$ or ± 1,1 % (coverage factor 1).

It is noteworthy that a field meter with a coil probe will indicate a magnetic field value that is an average over the cross-sectional area of the probe. The difference between this average and the central value [see Equation (A.4)] will be less than the maximum percentage departure from the central value. For example, while the largest departure of the magnetic

AVA Documents
Document Sharing Hub
Full document details: IEC 61786-1-2024

field from the central value is 0,63 % for the 0,10 m probe (in the plane of the loop), the average field is only 0,31 % more than the central (calibration field) value.

The equation for magnetic fields produced by two square coils can be derived using Equation (A.1) and the principle of superposition [24]. The necessary condition for square Helmholtz coils is that the spacing between the coils is equal to 0,5445 × $2a$, where $2a$ is the side dimension of the coil system [6].

By varying the frequency of the current through the loop, the frequency response of the field meter may be determined for the frequency range of interest. For a suitably designed detector with a stage of integration, a field meter with an air core probe should indicate a nearly constant rms value as the frequency is varied (see Clause A.1, last paragraph for discussion of resonance frequency effects of calibration coil). A similar result should be obtained with a coil probe that has a core of soft ferromagnetic material, if the change in permeability as a function of frequency is negligible.

Calibration of the higher scales of a magnetic field meter, i.e. > 10 μT, can usually be performed with a field generated by a coil system because background fields that are typically 0,1 μT or less make a negligible contribution to the calibration field. However, the presence of background fields can prevent calibration of the more sensitive scales because of their perturbing effects on the calibration field. An alternative procedure for calibrating the sensitive scales is to use the voltage injection technique [8].

A.1.2 Voltage injection method

The voltage injection technique may also be useful for calibrating the very high ranges of field meters, e.g. ranges greater than 10 mT, when there may be technical difficulties in generating such fields with a coil system.

NOTE Because of constraints introduced by instrument design, the voltage injection calibration method may only be applicable during the design stage or manufacturing stage of the field meter.

Using this procedure, the volts/tesla produced by a coil probe (when connected to the detector circuit) can be determined at each frequency of interest, using a voltmeter connected to the input of the detector and a magnetic field that is at least two orders of magnitude larger than the background field. Voltages that correspond to smaller magnetic fields are then injected into the detector circuit (with the probe disconnected) to calibrate the more sensitive scales of the magnetic field meter. A voltage divider with a well-known ratio when connected to the detector, an a.c. voltage source (e.g. a function generator), an accurate voltmeter, and adequate electric field shielding can be used to inject the known voltages for the frequency range of interest [8]. The frequency dependence of the voltage divider ratio should also be known in order to carry out the calibration. Figure A.6 shows a schematic view of a voltage injection circuit connected to the detector.

Documents
Document Sharing Hub
Full document details: IEC 61786-1-2024

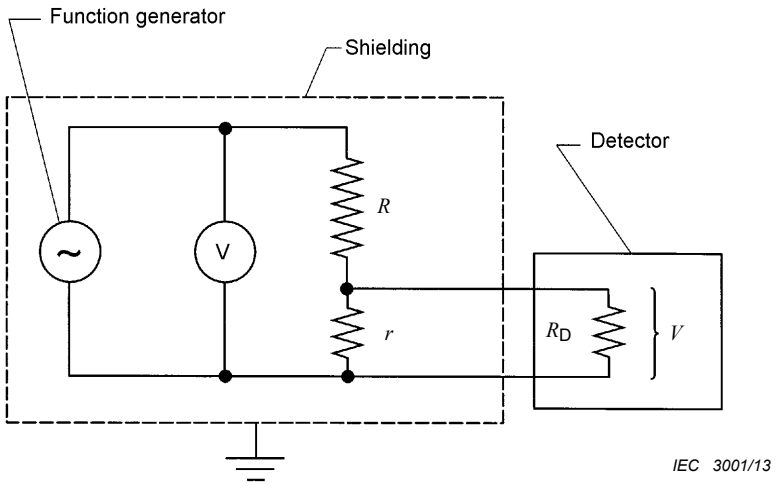

The voltage V from a function generator is reduced for injection purposes using a resistive divider. The injected voltage v is given by $Vr/(R+r)$ in the absence of frequency effects on the divider ratio. R and r are resistors with R typically much larger than r. The input impedance of the detector is approximated as a resistance R_D. The relation $r \ll R_D$ shall be satisfied to avoid significantly affecting the value of the divider ratio.

Figure A.6 – Diagram for voltage injection technique

The voltage injection approach may not be applicable to probes with ferromagnetic cores because the permeability of the core may vary with the magnetic flux density and affect the probe sensitivity (volts/tesla). It should be noted that the voltage injection technique can also be used as a means of verifying the calibration of all ranges of the magnetic field meter.

A.1.3 Comparison with reference magnetic field meter

A third method for calibrating instrumentation is performed by comparing field meter readings with a reference magnetic field meter that has previously been calibrated in a known magnetic field and/or by the voltage injection technique. With this approach, the field values determined with each sensor of the single-axis and three-axis field meters are compared with measurements obtained with the reference field meter in the same magnetic field (produced by a coil system). It is assumed that (1) the sensor dimensions of the meter being calibrated and the reference meter are comparable, or the field uniformity is sufficiently great that the averaging effects of the sensors (over their cross-sectional areas) are not significantly different, (2) the pass-band of the field meter being calibrated is comparable to that of the reference meter, and (3) background magnetic fields (typically unstable) do not make significant contributions to the calibration field. Comparisons are made at field levels and frequencies of interest.

Alternatively, the reference magnetic field meter may be used to verify the calibration of a coil system used for calibration purposes.

NOTE 1 Comparison of the magnetic field meter readings with the calibration field values enables the determination of correction factors that should be applied to readings when measurements are performed. Alternatively, the comparisons allow corrective adjustments to be made in the detector circuit. In either case, the uncertainty associated with the above calibration processes is equal to the uncertainty in the value of the calibration field values (once the corrections have been made) combined with uncertainties related to the stability and resolution of the field meter readings.

Perturbations of the calibration field can be produced by image current loops in nearby ground planes. For example, when the plane of a square loop is parallel to a *perfect* ground plane, the perturbation of the field at the centre of the loop is 2 % and 0,3 % for distances of one and two loop-side dimensions, respectively. The perturbation is reduced when the plane of the loop is perpendicular to the ground plane, e.g. the perturbation for the square loop is 0,3 % when the side of the loop is one side dimension away from the ground plane. Perturbation of the calibration field is less for square Helmholtz coils [7].

Documents
Document Sharing Hub
Full document details: IEC 61786-1-2024

Perturbations of the calibration field can also occur because of ferromagnetic materials in close proximity to the calibration loop. For example, large permeability materials, such as steel in a nearby cabinet or desk or a bracket under a table, will concentrate the magnetic flux and may perturb the value of the calculated field in the calibration loop. The influence of nearby ferromagnetic materials on the calibration field should be checked using a trial and error approach, e.g. the influence of a nearby relay rack on the magnetic field could be examined as a function of distance from the calibration coil.

Calibrations should be performed at frequencies well removed from the resonance frequency of the coil system. Because of the stray capacitance, the equivalent circuit of the coil system can be roughly modelled as an inductor and capacitor in parallel. Near and at resonance frequencies, significant amounts of current to the coils will be shunted through the stray capacitance and will not contribute to production of the magnetic field. One approach to determine the resonance frequency of a coil system is to measure the voltage across the coils as a function of frequency while keeping the current to the coils constant. At frequencies well removed from the resonance frequency, the voltage will increase linearly. Near the resonance frequency, the impedance of the coil system and the associated voltage measurement will become non-linear and increase more rapidly.

NOTE 2 A specific analysis will be necessary to determine an upper operating frequency limit for calibration coils.

A.2 Calibration of electric field strength meters

A.2.1 Electric field generation method

Nearly uniform electric fields may be produced for calibration purposes with parallel plates, provided that the dimensions of the plates are sufficiently large relative to the plate spacing, [1] [13], [32]. Ignoring edge effects, the uniform field value E_0 is given by V/d where V is the applied potential difference across the plates and d is the plate spacing. As a guide for determining parallel plate dimensions, the calculated magnitudes of the electric field strength E, normalized by the uniform field (E/E_0) at the plate surface and midway between the plates, are plotted as a function of normalized distance x/d from the plate edge as shown in Figure A.7. Numerical values are presented in Table A.1.

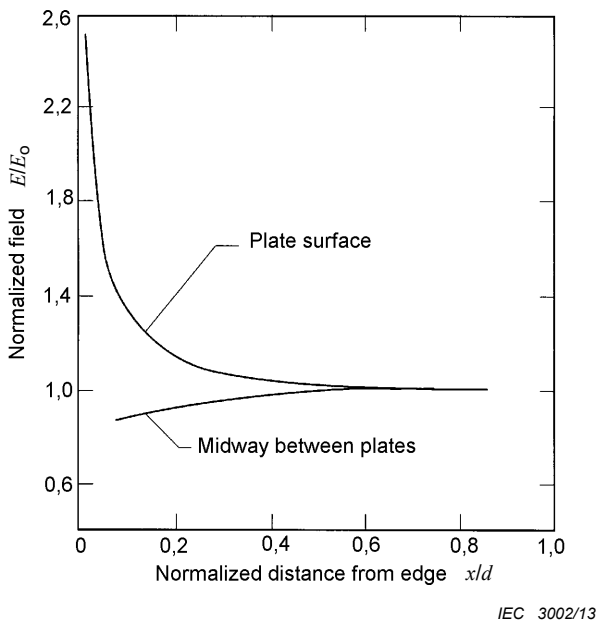

Figure A.7 – Calculated normalized electric field at plate surfaces and midway between plates as a function of the normalized distance from the edge of the plate

AVA Documents
Document Sharing Hub
Full document details: IEC 61786-1-2024

The results in Table A.1 show that the departure from field uniformity due to fringing fields decreases to 0,1 % at a distance of one plate spacing from the edge. For square plates of finite size, the effect of the fringing fields from the four edges may be estimated using the principle of superposition when the effect from one edge is less than 0,1 %. Numerical calculations of the field between finite size parallel plates suggests a discrepancy of 0,04 % using this approach [32]. These results are valid in the absence of perturbations from nearby ground planes. Calculations and measurements [19] , [32] indicate that energization of the parallel plates with a centre-tapped transformer provides a field that is more immune to perturbations due to nearby ground planes.

A parallel plates system that has been proven suitable for calibrations of free-body meters with diagonal dimensions less than 0,23 m is shown in Figure A.8 [13]. Metal sheets or a tightly stretched metal screen on frames of 1,5 m × 1,5 m, and a separation of 0,75 m are used to form the parallel plates. The plates are energized with a function generator/power amplifier/transformer combination which has adequate current-limiting resistors in the transformer output leads as a safety measure [3]. For example, 10 MΩ and larger resistors of adequate voltage rating are satisfactory up to 10 kV (i.e. $E \approx 13$ kV/m). Normal high-voltage laboratory safety practices shall be followed when working with high voltages. A calibration field that is within 1 % of the uniform field value, V/d, is produced at the centre of the parallel plates system described above (uncertainties in the values of V and d should be combined with the 1 %). The free-body meter is positioned at the centre of the parallel plates system with the insulating handle normally used during measurements.

To avoid significant perturbations of the surface charge distributions on the parallel plates due to the presence of the field meter, the largest diagonal dimension of the meter should not be greater than 0,23 m [23]. In addition, the distance from the parallel plates to the nearest ground plane (walls, floor, etc.) should be one plate spacing or more. The parallel plates system may be scaled upwards or downwards for larger or smaller field meters.

NOTE If corona occurs at the edges of the parallel plates, it can be eliminated by attaching metal tubes along the edges to reduce the surface electric field strength.

By varying the frequency of the voltage to the parallel plates, the frequency response of the field meter may be determined.

Documents
Document Sharing Hub
Full document details: IEC 61786-1-2024

Table A.1 – Calculated normalized electric field values midway between plates and at plate surfaces

Midway between plates	
x/d	***E/E*$_o$**
0,069 8	0,837
0,162 1	0,894
0,296 5	0,949
0,417 7	0,975
0,682 1	0,995
0,793 4	0,997
1,000 0	0,999
Plate surfaces	
1,000 0	1,001
0,795 4	1,002
0,686 1	1,005
0,437 6	1,025
0,243 1	1,095
0,162 4	1,183
0,123 0	1,265
0,099 1	1,342
0,082 9	1,414
0,045 2	1,732
0,030 7	2,000
0,018 5	2,449

If the distance of the lower plate to the floor is less than one plate spacing, the arrangement designed to energize the parallel plates as shown in Figure A.8 may be modified so that the lower plate is at ground potential.

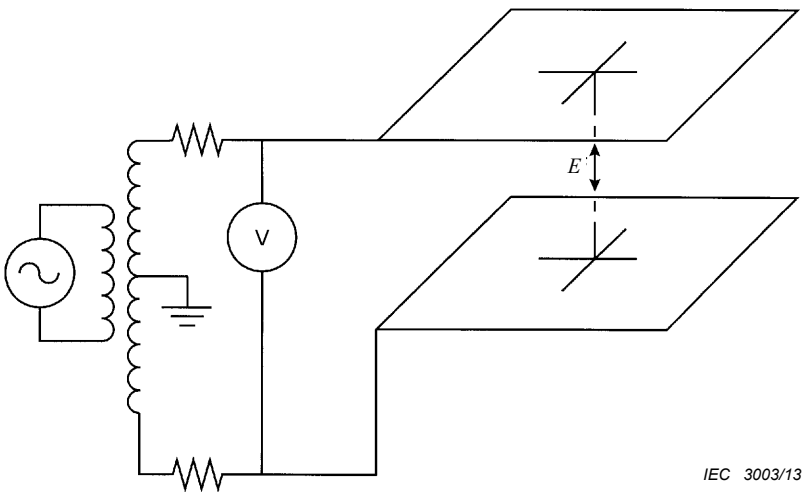

Figure A.8 – Parallel plates system for calibrating free-body electric field meters

Documents
Document Sharing Hub
Full document details: IEC 61786-1-2024