IEC 61788-22-3

Edition 1.0 2022-08

INTERNATIONAL STANDARD

NORME INTERNATIONALE

colour inside

Superconductivity –
Part 22-3: Superconducting strip photon detector – Dark count rate

Supraconductivité –
Partie 22-3: Détecteur de photons à bande supraconductrice – Taux de comptage en obscurité

Documents
Document Sharing Hub

IEC 61788-22-3:2022-08(en-fr)

Full document details: IEC 61788-22-3 2022

THIS PUBLICATION IS COPYRIGHT PROTECTED
Copyright © 2022 IEC, Geneva, Switzerland

All rights reserved. Unless otherwise specified, no part of this publication may be reproduced or utilized in any form or by any means, electronic or mechanical, including photocopying and microfilm, without permission in writing from either IEC or IEC's member National Committee in the country of the requester. If you have any questions about IEC copyright or have an enquiry about obtaining additional rights to this publication, please contact the address below or your local IEC member National Committee for further information.

Droits de reproduction réservés. Sauf indication contraire, aucune partie de cette publication ne peut être reproduite ni utilisée sous quelque forme que ce soit et par aucun procédé, électronique ou mécanique, y compris la photocopie et les microfilms, sans l'accord écrit de l'IEC ou du Comité national de l'IEC du pays du demandeur. Si vous avez des questions sur le copyright de l'IEC ou si vous désirez obtenir des droits supplémentaires sur cette publication, utilisez les coordonnées ci-après ou contactez le Comité national de l'IEC de votre pays de résidence.

IEC Secretariat
3, rue de Varembé
CH-1211 Geneva 20
Switzerland

Tel.: +41 22 919 02 11
info@iec.ch
www.iec.ch

About the IEC
The International Electrotechnical Commission (IEC) is the leading global organization that prepares and publishes International Standards for all electrical, electronic and related technologies.

About IEC publications
The technical content of IEC publications is kept under constant review by the IEC. Please make sure that you have the latest edition, a corrigendum or an amendment might have been published.

IEC publications search - webstore.iec.ch/advsearchform
The advanced search enables to find IEC publications by a variety of criteria (reference number, text, technical committee, …). It also gives information on projects, replaced and withdrawn publications.

IEC Just Published - webstore.iec.ch/justpublished
Stay up to date on all new IEC publications. Just Published details all new publications released. Available online and once a month by email.

IEC Customer Service Centre - webstore.iec.ch/csc
If you wish to give us your feedback on this publication or need further assistance, please contact the Customer Service Centre: sales@iec.ch.

IEC Products & Services Portal - products.iec.ch
Discover our powerful search engine and read freely all the publications previews. With a subscription you will always have access to up to date content tailored to your needs.

Electropedia - www.electropedia.org
The world's leading online dictionary on electrotechnology, containing more than 22 300 terminological entries in English and French, with equivalent terms in 19 additional languages. Also known as the International Electrotechnical Vocabulary (IEV) online.

A propos de l'IEC
La Commission Electrotechnique Internationale (IEC) est la première organisation mondiale qui élabore et publie des Normes internationales pour tout ce qui a trait à l'électricité, à l'électronique et aux technologies apparentées.

A propos des publications IEC
Le contenu technique des publications IEC est constamment revu. Veuillez vous assurer que vous possédez l'édition la plus récente, un corrigendum ou amendement peut avoir été publié.

Recherche de publications IEC - webstore.iec.ch/advsearchform
La recherche avancée permet de trouver des publications IEC en utilisant différents critères (numéro de référence, texte, comité d'études, …). Elle donne aussi des informations sur les projets et les publications remplacées ou retirées.

IEC Just Published - webstore.iec.ch/justpublished
Restez informé sur les nouvelles publications IEC. Just Published détaille les nouvelles publications parues. Disponible en ligne et une fois par mois par email.

Service Clients - webstore.iec.ch/csc
Si vous désirez nous donner des commentaires sur cette publication ou si vous avez des questions contactez-nous: sales@iec.ch.

IEC Products & Services Portal - products.iec.ch
Découvrez notre puissant moteur de recherche et consultez gratuitement tous les aperçus des publications. Avec un abonnement, vous aurez toujours accès à un contenu à jour adapté à vos besoins.

Electropedia - www.electropedia.org
Le premier dictionnaire d'électrotechnologie en ligne au monde, avec plus de 22 300 articles terminologiques en anglais et en français, ainsi que les termes équivalents dans 19 langues additionnelles. Egalement appelé Vocabulaire Electrotechnique International (IEV) en ligne.

AVA Documents
Document Sharing Hub

Full document details: IEC 61788-22-3 2022

IEC 61788-22-3

Edition 1.0 2022-08

INTERNATIONAL STANDARD

NORME INTERNATIONALE

colour inside

Superconductivity –
Part 22-3: Superconducting strip photon detector – Dark count rate

Supraconductivité –
Partie 22-3: Détecteur de photons à bande supraconductrice – Taux de comptage en obscurité

INTERNATIONAL
ELECTROTECHNICAL
COMMISSION

COMMISSION
ELECTROTECHNIQUE
INTERNATIONALE

ICS 29.050

ISBN 978-2-8322-4070-0

Warning! Make sure that you obtained this publication from an authorized distributor.
Attention! Veuillez vous assurer que vous avez obtenu cette publication via un distributeur agréé.

® Registered trademark of the International Electrotechnical Commission
Marque déposée de la Commission Electrotechnique Internationale

AVA Documents
Document Sharing Hub

Full document details: IEC 61788-22-3 2022

CONTENTS

FOREWORD 4
INTRODUCTION 6
1 Scope 8
2 Normative references 8
3 Terms, definitions and abbreviated terms 8
3.1 Terms and definitions 8
3.2 Abbreviated terms 10
4 Principle of the measurement method 10
5 Apparatus 11
5.1 Detector packaging 11
5.2 Cryogenic system 11
5.3 Measurement system 13
6 Measurement procedure 14
6.1 Measurement of temperature 14
6.2 Measurement of switching current 14
6.3 Measurement of R_D 15
7 Standard uncertainty 16
7.1 Type A uncertainty 16
7.2 Type B uncertainty 16
7.3 Uncertainty budget table 17
7.4 Uncertainty requirement 18
8 Test report 18
8.1 Identification of device under test (DUT) 18
8.2 Measurement conditions and results 18
8.3 Miscellaneous optional report 19
Annex A (informative) Results of the round robin test 20
A.1 DUT packages 20
A.2 Measurement conditions 20
A.3 Measurement results 21
Bibliography 25

Figure 1 – Example of one dark count pulse in the pulse train in inset 9
Figure 2 – Schematic curve of R_D as a function of normalized bias current 11
Figure 3 – Schematic diagram of a typical DCR measurement system 12
Figure 4 – Equivalent circuit of the DCR measurement 13
Figure 5 – Typical current-voltage (I-U) curve of an SSPD 15
Figure A.1 – Photograph of the DUT with an SSPD and a temperature sensor 20
Figure A.2 – I-U curve and R_D curves 22

Table 1 – Uncertainty budget table for R_D 18
Table A.1 – Test data of DUT 22
Table A.2 – Temperature sensitivity and bias current sensitivity above a normalized bias current of 0,9 23

AVA Documents
Document Sharing Hub

Full document details: IEC 61788-22-3 2022

Table A.3 – u_A and u_B above a normalized bias current of 0,9 23
Table A.4 – Budget table for R_D at a bias point of 5,25 µA (I_b/I_{sw} = 0,955) 23
Table A.5 – DCR values measured at a bias point of 5,25 µA (I_b/I_{sw} = 0,955) 24
Table A.6 – Temperature measurement 24

Documents
Document Sharing Hub
Full document details: IEC 61788-22-3 2022

INTERNATIONAL ELECTROTECHNICAL COMMISSION

SUPERCONDUCTIVITY –

Part 22-3: Superconducting strip photon detector – Dark count rate

FOREWORD

1) The International Electrotechnical Commission (IEC) is a worldwide organization for standardization comprising all national electrotechnical committees (IEC National Committees). The object of IEC is to promote international co-operation on all questions concerning standardization in the electrical and electronic fields. To this end and in addition to other activities, IEC publishes International Standards, Technical Specifications, Technical Reports, Publicly Available Specifications (PAS) and Guides (hereafter referred to as "IEC Publication(s)"). Their preparation is entrusted to technical committees; any IEC National Committee interested in the subject dealt with may participate in this preparatory work. International, governmental and non-governmental organizations liaising with the IEC also participate in this preparation. IEC collaborates closely with the International Organization for Standardization (ISO) in accordance with conditions determined by agreement between the two organizations.
2) The formal decisions or agreements of IEC on technical matters express, as nearly as possible, an international consensus of opinion on the relevant subjects since each technical committee has representation from all interested IEC National Committees.
3) IEC Publications have the form of recommendations for international use and are accepted by IEC National Committees in that sense. While all reasonable efforts are made to ensure that the technical content of IEC Publications is accurate, IEC cannot be held responsible for the way in which they are used or for any misinterpretation by any end user.
4) In order to promote international uniformity, IEC National Committees undertake to apply IEC Publications transparently to the maximum extent possible in their national and regional publications. Any divergence between any IEC Publication and the corresponding national or regional publication shall be clearly indicated in the latter.
5) IEC itself does not provide any attestation of conformity. Independent certification bodies provide conformity assessment services and, in some areas, access to IEC marks of conformity. IEC is not responsible for any services carried out by independent certification bodies.
6) All users should ensure that they have the latest edition of this publication.
7) No liability shall attach to IEC or its directors, employees, servants or agents including individual experts and members of its technical committees and IEC National Committees for any personal injury, property damage or other damage of any nature whatsoever, whether direct or indirect, or for costs (including legal fees) and expenses arising out of the publication, use of, or reliance upon, this IEC Publication or any other IEC Publications.
8) Attention is drawn to the Normative references cited in this publication. Use of the referenced publications is indispensable for the correct application of this publication.
9) Attention is drawn to the possibility that some of the elements of this IEC Publication may be the subject of patent rights. IEC shall not be held responsible for identifying any or all such patent rights.

IEC 61788-22-3 has been prepared by IEC technical committee 90: Superconductivity. It is an International Standard.

The text of this International Standard is based on the following documents:

Draft	Report on voting
90/489/FDIS	90/491/RVD

Full information on the voting for its approval can be found in the report on voting indicated in the above table.

The language used for the development of this International Standard is English.

This document was drafted in accordance with ISO/IEC Directives, Part 2, and developed in accordance with ISO/IEC Directives, Part 1 and ISO/IEC Directives, IEC Supplement, available at www.iec.ch/members_experts/refdocs. The main document types developed by IEC are described in greater detail at www.iec.ch/standardsdev/publications.

AVA Documents
Document Sharing Hub

A list of all parts in the IEC 61788 series, published under the general title *Superconductivity*, can be found on the IEC website.

The committee has decided that the contents of this document will remain unchanged until the stability date indicated on the IEC website under webstore.iec.ch in the data related to the specific document. At this date, the document will be

- reconfirmed,
- withdrawn,
- replaced by a revised edition, or
- amended.

IMPORTANT – The "colour inside" logo on the cover page of this document indicates that it contains colours which are considered to be useful for the correct understanding of its contents. Users should therefore print this document using a colour printer.

Documents
Document Sharing Hub

Full document details: IEC 61788-22-3 2022

INTRODUCTION

IEC 61788-22 (all parts) is a series of International Standards on superconductor electronic devices. Superconductivity enables ultra-sensitive sensing or detection of a variety of measurands. IEC 61788-22-1 [1][1] lists various types of superconductor sensors and detectors. The strip type in this document is one of them.

A typical fundamental structure of strip type detectors is a meander superconductor line, for example, with a thickness of less than 10 nm, a width of less than 100 nm or a few 100 nm, and a length of a few mm. The structure is in the nanoscale. ISO TS 80004-2:2015 [2] defines the nanoscale as a length range approximately from 1 nm to 100 nm. Because nano-objects have one or two dimensions in the nanoscale, superconductor meander lines are categorized as a nano-object.

The term "nanowire" is frequently used for superconductor meander lines, but it is not recommended in this document. In the ISO vocabulary, a nanowire is defined as an electrically conducting or semi-conducting nanofibre with two external dimensions in the nanoscale, with the third dimension being significantly larger. The two external dimensions of the nanowires are in the nanoscale range, approximately from 1 nm to 100 nm. When the first two dimensions differ significantly, a "nanoplate," "nanoribbon," or "nanotape" shall be used for the meander line shape. However, in the field of electronics, these terms are not common. In addition to the ISO definition of nano-objects, the shape of the superconductor meander lines may not fit the shape of common wires that have a round cross-section. Although there are cases in which a superconductor line shape falls into the category of nanowire (e.g. a superconductor line with a thickness of 10 nm and a width of 100 nm), the theoretical treatment of single photon detection mechanisms still requires "strip" rather than "nanowire": the width is wider than coherence length and thus the superconductor line has a two-dimensional nature. Therefore, IEC 61788-22-1 assigns the word "strip" or "nanostrip" to the meander line shape. According to the nomenclature of the standard, the strip type detector is called superconductor strip photon detector (SSPD) or superconductor nanostrip photon detector (SNSPD). The abbreviated term SSPD is used in this document.

SSPDs are usually cooled down to a temperature well below the critical temperature and current-biased with a bias value close to, but smaller than, its switch current. The photon detection mechanisms can be described by Cooper-pair breaking, leading to hotspot formation or vortex motion, followed by electrothermal feedback creating a resistive region [3], [4]. Although an exact detection model has not been established yet, it is true that photon absorption leads to Cooper pair breaking that creates quasiparticles because the photon energy in a telecommunication wavelength band (~ 1 eV) is typically 2 to 3 orders of magnitude higher than the binding energy of a Cooper pair (~ meV). The photon absorption may create a normal-conducting local-hotspot in the nanostrip. With an electrothermal feedback process, the normal conducting domain expands across the width of the nanostrip and along the current flow direction, leading to a voltage drop in the superconductor nanostrip. Other possible models are vortex-antivortex depairing, in which two vortices move toward the opposite strip edges, and single vortex crossing. Such vortex motion also creates a voltage drop, which can be followed by resistive domain creation with the same electrothermal feedback mechanism. Because of the resistive domain in the strip, the bias current is diverted to a readout circuit. The normal conducting region will be cooled down rapidly and finally disappear. The above process produces a voltage pulse which corresponds to an event of single photon absorption.

Typical application areas of SSPDs include quantum information, laser communication, light detection and ranging, fluorescence spectroscopy and quantum computing. The SSPDs outperform such single photon detectors as photomultipliers and avalanche photodiodes in performance measures listed in the next paragraph. Due to the increasing needs for ultra-sensitive photon detection in a range of visible to mid-infrared wavelengths, the SSPD market

[1] Figures in square brackets refer to the Bibliography.

Documents
Document Sharing Hub

Full document details: IEC 61788-22-3 2022

is growing quickly. The standardization of SSPDs is beneficial to not only the industrial application, but also detector development.

For photon detection, there are fundamental parameters, such as detection efficiency, timing jitter, dead time and dark count rate. The dark count rate affects the measurement of other parameters. For this reason, priority is given to the dark count rate. This document (IEC 61788-22-3) defines a measurement method of dark count rate (DCR).

Documents
Document Sharing Hub

Full document details: IEC 61788-22-3 2022

SUPERCONDUCTIVITY –

Part 22-3: Superconducting strip photon detector – Dark count rate

1 Scope

This part of IEC 61788 is applicable to the measurement of the dark count rate (DCR, R_D) of superconductor strip photon detectors (SSPDs). It specifies terms, definitions, symbols and the measurement method of DCR that depends on the bias current (I_b) and operating temperature (T).

NOTE The data of measurement results in Annex A are based on measurements of one institute only. The standard will be updated after the data of a complete round robin test are available.

2 Normative references

There are no normative references in this document.

3 Terms, definitions and abbreviated terms

3.1 Terms and definitions

For the purposes of this document, the following terms and definitions apply.

ISO and IEC maintain terminological databases for use in standardization at the following addresses:

- IEC Electropedia: available at http://www.electropedia.org/
- ISO Online browsing platform: available at http://www.iso.org/obp

3.1.1
dark count
count recorded without any incident photon

Note 1 to entry: An example of one dark count is shown in Figure 1. The inset of Figure 1 shows a pulse train of many dark counts, which have the same pulse shape.

Documents
Document Sharing Hub

Full document details: IEC 61788-22-3 2022

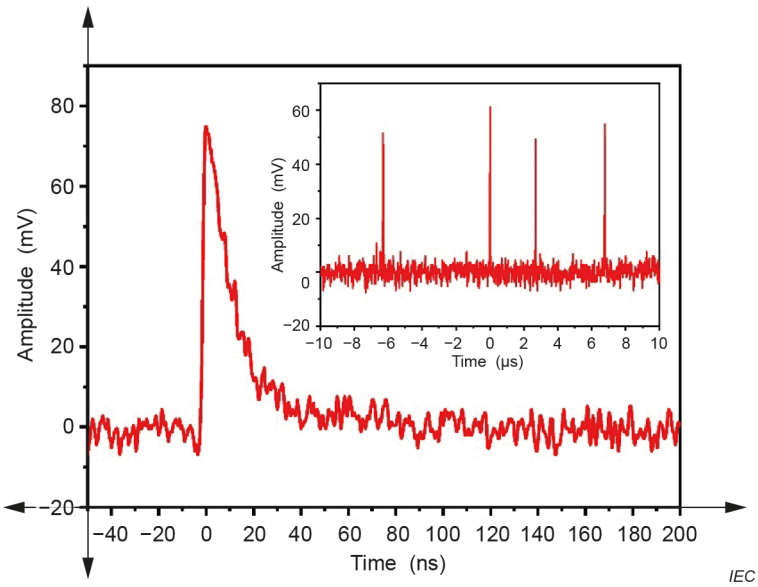

Figure 1 – Example of one dark count pulse in the pulse train in inset

3.1.2
dark count rate
DCR
R_D
number of dark counts per unit of time

Note 1 to entry: R_D is equal to the sum of R_{Db} and R_{Di} as defined below.

3.1.3
background dark count rate
R_{Db}
DCR originating from blackbody radiation of optical components and stray photons

3.1.4
intrinsic dark count rate
R_{Di}
DCR originating from spontaneous occurrence of resistance inside a superconductor strip

3.1.5
bias current
I_b
direct current flowing through a superconductor strip that forms an SSPD to hold operating condition

3.1.6
switch current
I_{sw}
maximum bias current for photon counting operation

Note 1 to entry: The I_{sw} value can be determined as the highest supercurrent on a static current-voltage (I-U) curve. Since a strip goes to normal conducting state locally by electrothermal feedback mechanism, the I_{sw} value is usually lower than the critical current, at which the whole strip becomes the normal conducting state.

Documents
Document Sharing Hub
Full document details: IEC 61788-22-3 2022

3.1.7
normalized bias current
I_b/I_{sw}
bias current divided by switch current

3.1.8
retrapping current
I_r
current at which an SSPD resumes a superconducting state from a normal conducting state when the bias current is reduced from a high value above I_{sw}

3.2 Abbreviated terms

R_D	dark count rate
R_{Db}	background dark count rate
R_{Di}	intrinsic dark count rate
I_b	bias current
I_{sw}	switch current
T	temperature
t	time interval
I_r	retrapping current
V_{pp}	output pulse amplitude
N	number of measurements at a specific I_b and T
u_A	type A standard uncertainty of R_D
u_B	type B standard uncertainty of R_D

4 Principle of the measurement method

DCR is divided into two components: background DCR (R_{Db}) that originates from blackbody radiation of optical components and stray photons at any I_b value and intrinsic DCR (R_{Di}) that originates from spontaneous occurrence of resistance inside superconductor strips and is dominant in a high I_b region near I_{sw}.

Figure 2 shows a schematic curve of the bias current dependence of R_D, which is called the R_D curve. In the measurement setup with an SSPD coupled to an optical fibre for signal input, the R_{Db} component is dominant in a low I_b region, while the R_{Di} component is dominant in a high I_b region. The R_{Db} component that has a relatively weak dependence on I_b and equals the product of the detection efficiency and the sum of blackbody photons and stray photons. On the other hand, the R_{Di} component is related to the events of spontaneous voltage-drop occurrence probably due to vortex dynamics related to inherent properties of superconductor strips.

Since R_{Db} strongly depends on user's environment, R_D curves shall be measured in a high bias current region of I_b/I_{sw} (> 0,8 in Figure 2), in which R_{Di} is dominant with a negligible contribution of R_{Db}.

The R_D curves shall be measured by counting output pulses for a certain period at different I_b points while the temperature of the SSPD is held constant at an operating temperature recommended by a manufacturer. There is an approximately linear relation between lg(R_D) and normalized bias current in I_b/I_{sw} > 0,8, as shown in Figure 2.

AVA Documents
Document Sharing Hub
Full document details: IEC 61788-22-3 2022

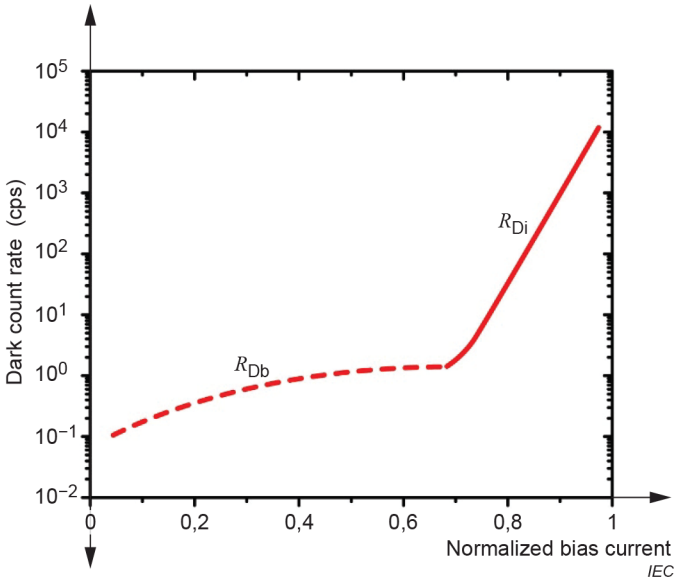

R_{Db} is dominant in the low bias region.

R_{Di} is dominant in the high bias region.

Figure 2 – Schematic curve of R_D as a function of normalized bias current

5 Apparatus

5.1 Detector packaging

Before characterizing an SSPD, it is necessary to make a detector package. For applications, the most important purpose of packaging is to effectively couple the light to the SSPD active area. A high coupling efficiency ensures a high detection efficiency. However, for the measurement of R_{Di} of the SSPD, optical coupling is optional.

When optical coupling is optionally installed, fibre optical coupling is one of the most common methods. The optical fibre shall be fixed in the block with effective and stable light coupling to the detector. The temperature of the fibre end shall be the same as the block to minimize R_{Db}. The fibre core shall be axially aligned to the SSPD active area surface to ensure good optical coupling.

For the measurement of R_{Di}, the SSPD shall be fixed to the packaging block using conductive silver paste or low-temperature conducting epoxy to ensure good thermal contact. The SSPD shall be surrounded by the block material so that no blackbody radiation causes a temperature rise of the SSPD. The block should be made of oxygen-free copper and equipped with a radio frequency (RF) connector.

5.2 Cryogenic system

The most commonly used cryogenic system for SSPD operation is a cryostat based on a closed-cycle mechanical cryocooler, e.g., Gifford-McMahon (GM) cryocooler or a pulse-tube cryocooler, which provides a base temperature of less than 4 K. The packaging block is mounted on a cold head plate with good thermal contact to obtain the identical temperature as that of the plate. It is noted that a geomagnetic field causes no observable change in DCR, so that a magnetic shield is unnecessary.

The temperature of the packaging block shall be measured by a calibrated temperature sensor during the R_D measurement. The procedure of the temperature measurement is provided in 6.1.

Documents
Document Sharing Hub
Full document details: IEC 61788-22-3 2022

The fibre and coaxial cables should be installed inside the cryostat to provide the optical and electronic connection between the detector package and the measurement circuit at room temperature.

As shown in Figure 3, one end of the fibre (blue line) is fixed on the detector package. The other end of the fibre is connected to a fibre connector (blue square) on the cryostat chamber surface at room temperature. For the measurement of R_{Di}, the fibre should be removed, then the detector is fully shielded from blackbody radiation and stray photons.

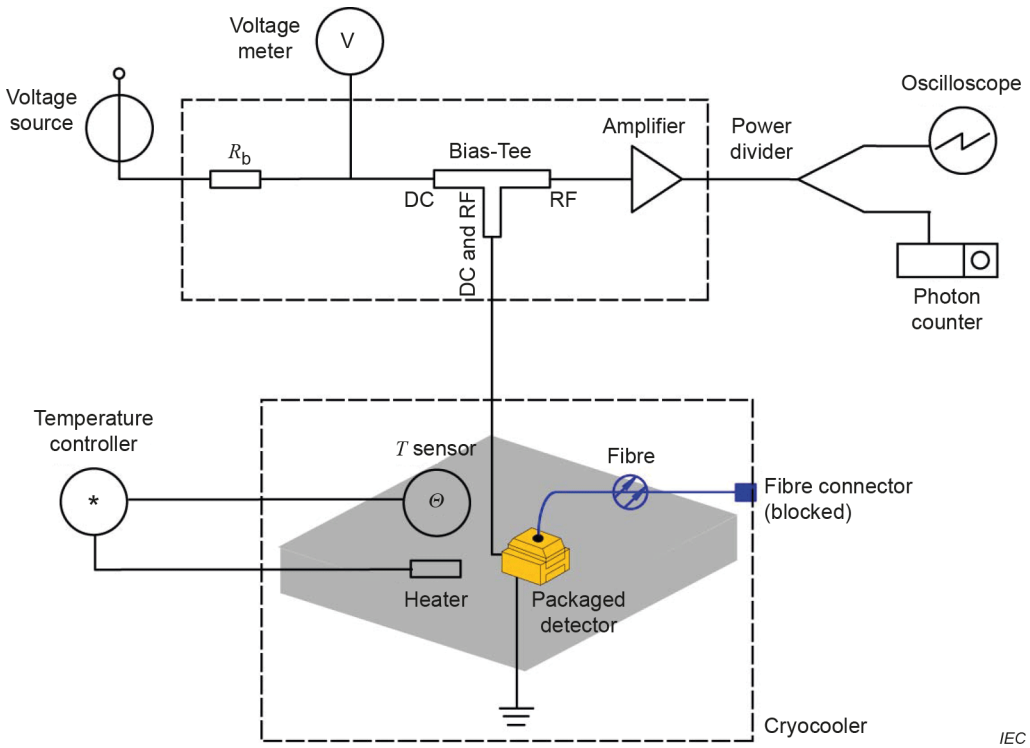

Figure 3 – Schematic diagram of a typical *DCR* measurement system

Documents
Document Sharing Hub
Full document details: IEC 61788-22-3 2022

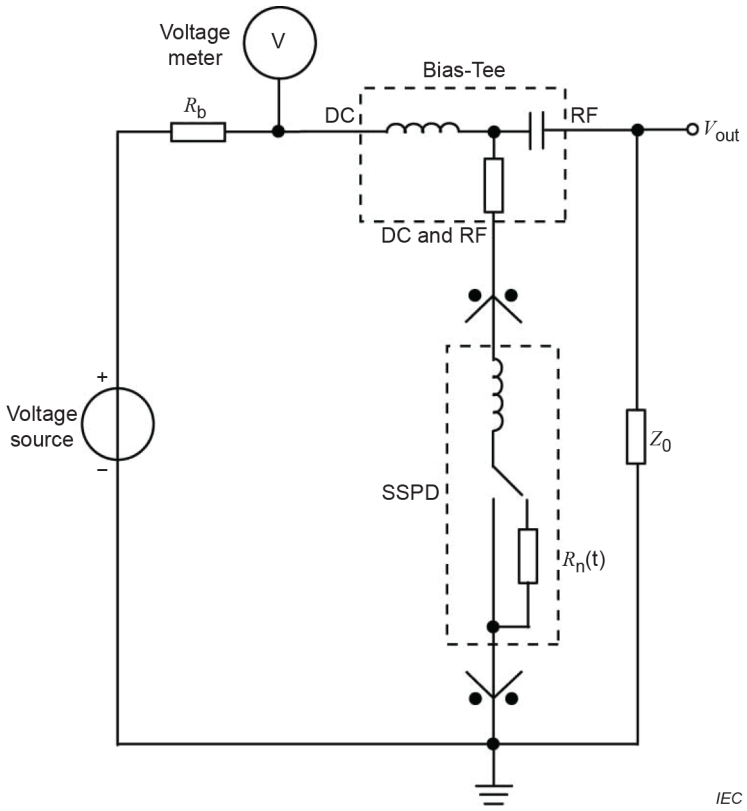

Figure 4 – Equivalent circuit of the *DCR* measurement

5.3 Measurement system

The schematic diagram of a typical measurement system for the *DCR* measurement and the equivalent circuit are shown in Figure 3 and Figure 4, respectively. The SSPD in the detector package is connected to the bias tee through a coaxial cable. The voltage source in series with the bias resistor (R_b) supplies a stable bias current to the SSPD. The tolerance of the bias resistor shall be better than ±0,01 % (the ± sign here means the upper and lower tolerance limits, which is different from the expanded uncertainty). The bias current is fed to the detector through the direct current (DC) port of the bias tee, and output pulses are extracted from the RF port and then amplified by a wideband low noise RF amplifier. The amplifier shall cover 100 kHz to 500 MHz at least to avoid pulse waveform distortion. The amplifier input impedance shall be 50 Ω to achieve a return loss over 15 dB to reduce back-reflected pulses. The amplified pulses should be monitored by an oscilloscope, and shall be counted by a counting instrument.

A better signal-to-noise ratio can be obtained when a suitable bias tee and an amplifier are operated at a low temperature. However, the cryogenic operation is optional, since no change in *DCR* is expected by adjusting a threshold value for counting output pulses properly.

In order to reduce or eliminate environmental electromagnetic noise, all the electronics in the measurement system are shielded by a metallic shell, which also should be connected to the earth terminal. To avoid the potential difference among the circuit components, stabilize phase voltage with reference to the earth and limit transient voltage; the resistance to the earth should be less than 4 Ω. The length of the earth wire from the instruments to the earth should be less than 2 m.

Documents
Document Sharing Hub
Full document details: IEC 61788-22-3 2022

6 Measurement procedure

6.1 Measurement of temperature

A cryogenic temperature sensor, e.g. Si diode, with a calibrated accuracy of ±12 mK in a working temperature range shall be used to monitor T and its fluctuation of the detector package, which shall be firmly attached to the package block or as close to the block as possible. The operating temperature shall be kept constant by using a temperature controller with a heater attached to the cold head.

Because DCR is sensitive to temperature, it is necessary to measure its fluctuation during the DCR measurement. The fluctuation is defined as the highest and lowest temperatures subtracted by an average temperature.

Typically, the short-term temperature fluctuation of the cryocooler cold head can be kept below 12 mK. However, long-term fluctuation can be influenced by the environmental temperature. Therefore, during the DCR measurements, T values should be recorded periodically more than ten times.

The average temperature value during the R_D measurement shall be reported as stated in Clause 8. The required temperature regulation is ±0,5 % of an average temperature during measurement. DCR measurements at different operating temperatures may be reported for a wide range of applications.

6.2 Measurement of switching current

The switch current (I_{sw}) shall be measured before R_D measurement. The detector package shall be cooled in a cryostat with a mechanical cooler or a liquid cryogen to a base temperature, which shall be regulated. When the reading value of the temperature controller reaches the operating temperature, an interval of more than 10 minutes should be required before starting I-U curve measurement. The I-U curve measurement should be carried out using the DC channel in Figure 3, where the voltage source is connected to R_b and the detector in series. Figure 5 shows a typical I-U curve.

Two-terminal I-U measurement instead of four-terminal measurement may be used owing to the high resistance of the SSPD in a normal conducting state. The procedure for the I-U curve measurement should be as follows.

a) The voltage of a voltage source should be scanned up and down gradually so that a static I-U curve is obtained.

b) The DC voltage drop across the SSPD (U_{SSPD}) should be measured by a voltmeter.

The current flowing in the detector can be calculated from U_{source}, R_b and U_{SSPD} by using $I_{SSPD} = I_{R_b} = \frac{U_{source} - U_{SSPD}}{R_b}$. The scan loop reaches the highest current at I_{sw}. Beyond this point, the I_{SSPD} decreases along the load line. After a part of the strip becomes normal conducting, U_{SSPD} increases further. When the volage is reduced from the maximum voltage, the SSPD returns to a zero-voltage state at I_r.

Documents
Document Sharing Hub
Full document details: IEC 61788-22-3 2022

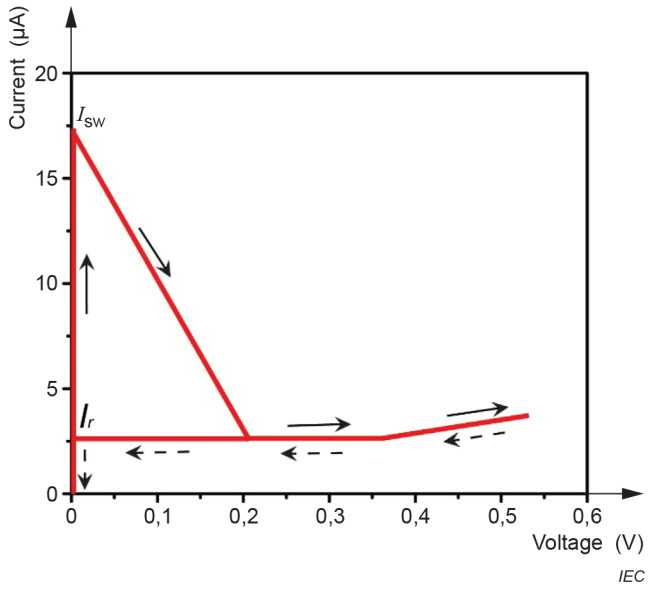

Figure 5 – Typical current-voltage (I-U) curve of an SSPD

6.3 Measurement of R_D

The DCR measurement procedure shall be as follows.

a) The temperature of the detector package shall be set at a proper operating temperature recommended for the use of the SSPD.

b) The temperature fluctuation during the DCR measurement shall be regulated within ±0,5 % of an average temperature.

c) The discrimination voltage of the photon counting shall be set at a value between 0,5 V_{pp} and 0,9 V_{pp}, where V_{pp} is the amplitude of the detector output pulses. The V_{pp} is equal to 50 Ω (I_b – I_r) G, where G is the gain of the amplifier.

d) The pulse counter records the number of dark counts generated in a time interval (t). The time interval of the counter shall be set at a value, for example 10 s, so that the type A relative standard uncertainty of u_A / R_D is less than 14 % that is given in 7.4. R_D is obtained by dividing the count number by t.

e) R_D at each specific I_b point shall be recorded N times. Average values of $\overline{R_D}$ shall be calculated using Formula (1). N shall be more than 10.

$$\overline{R_D} = \frac{1}{N}\sum_{j=1}^{N} R_{Dj} \tag{1}$$

f) An R_D curve shall be measured by increasing I_b at a certain small step in a range between 0,9 × I_{sw} and I_{sw} so that the number of data points is more than 5. The procedure described in d) to e) shall be repeated until I_b reaches just below I_{sw}.

g) The dependence of R_D curves on temperature may optionally be measured by changing the operating temperature. The procedure described in d) to f) shall be repeated when the temperature dependence is measured.

Documents
Document Sharing Hub
Full document details: IEC 61788-22-3 2022