IEC 61788-25

Edition 1.0 2018-08

INTERNATIONAL STANDARD

NORME INTERNATIONALE

colour inside

Superconductivity –
Part 25: Mechanical properties measurement – Room temperature tensile test on REBCO wires

Supraconductivité –
Partie 25: Mesure des propriétés mécaniques – Essai de traction à température ambiante des fils REBCO

IEC 61788-25:2018-08(en-fr)

Documents
Document Sharing Hub

Full document details: IEC 61788-25 2018

THIS PUBLICATION IS COPYRIGHT PROTECTED
Copyright © 2018 IEC, Geneva, Switzerland

All rights reserved. Unless otherwise specified, no part of this publication may be reproduced or utilized in any form or by any means, electronic or mechanical, including photocopying and microfilm, without permission in writing from either IEC or IEC's member National Committee in the country of the requester. If you have any questions about IEC copyright or have an enquiry about obtaining additional rights to this publication, please contact the address below or your local IEC member National Committee for further information.

Droits de reproduction réservés. Sauf indication contraire, aucune partie de cette publication ne peut être reproduite ni utilisée sous quelque forme que ce soit et par aucun procédé, électronique ou mécanique, y compris la photocopie et les microfilms, sans l'accord écrit de l'IEC ou du Comité national de l'IEC du pays du demandeur. Si vous avez des questions sur le copyright de l'IEC ou si vous désirez obtenir des droits supplémentaires sur cette publication, utilisez les coordonnées ci-après ou contactez le Comité national de l'IEC de votre pays de résidence.

IEC Central Office
3, rue de Varembé
CH-1211 Geneva 20
Switzerland

Tel.: +41 22 919 02 11
info@iec.ch
www.iec.ch

About the IEC
The International Electrotechnical Commission (IEC) is the leading global organization that prepares and publishes International Standards for all electrical, electronic and related technologies.

About IEC publications
The technical content of IEC publications is kept under constant review by the IEC. Please make sure that you have the latest edition, a corrigenda or an amendment might have been published.

IEC Catalogue - webstore.iec.ch/catalogue
The stand-alone application for consulting the entire bibliographical information on IEC International Standards, Technical Specifications, Technical Reports and other documents. Available for PC, Mac OS, Android Tablets and iPad.

IEC publications search - webstore.iec.ch/advsearchform
The advanced search enables to find IEC publications by a variety of criteria (reference number, text, technical committee,…). It also gives information on projects, replaced and withdrawn publications.

IEC Just Published - webstore.iec.ch/justpublished
Stay up to date on all new IEC publications. Just Published details all new publications released. Available online and also once a month by email.

Electropedia - www.electropedia.org
The world's leading online dictionary of electronic and electrical terms containing 21 000 terms and definitions in English and French, with equivalent terms in 16 additional languages. Also known as the International Electrotechnical Vocabulary (IEV) online.

IEC Glossary - std.iec.ch/glossary
67 000 electrotechnical terminology entries in English and French extracted from the Terms and Definitions clause of IEC publications issued since 2002. Some entries have been collected from earlier publications of IEC TC 37, 77, 86 and CISPR.

IEC Customer Service Centre - webstore.iec.ch/csc
If you wish to give us your feedback on this publication or need further assistance, please contact the Customer Service Centre: sales@iec.ch.

A propos de l'IEC
La Commission Electrotechnique Internationale (IEC) est la première organisation mondiale qui élabore et publie des Normes internationales pour tout ce qui a trait à l'électricité, à l'électronique et aux technologies apparentées.

A propos des publications IEC
Le contenu technique des publications IEC est constamment revu. Veuillez vous assurer que vous possédez l'édition la plus récente, un corrigendum ou amendement peut avoir été publié.

Catalogue IEC - webstore.iec.ch/catalogue
Application autonome pour consulter tous les renseignements bibliographiques sur les Normes internationales, Spécifications techniques, Rapports techniques et autres documents de l'IEC. Disponible pour PC, Mac OS, tablettes Android et iPad.

Recherche de publications IEC - webstore.iec.ch/advsearchform

La recherche avancée permet de trouver des publications IEC en utilisant différents critères (numéro de référence, texte, comité d'études,…). Elle donne aussi des informations sur les projets et les publications remplacées ou retirées.

IEC Just Published - webstore.iec.ch/justpublished

Restez informé sur les nouvelles publications IEC. Just Published détaille les nouvelles publications parues. Disponible en ligne et aussi une fois par mois par email.

Electropedia - www.electropedia.org

Le premier dictionnaire en ligne de termes électroniques et électriques. Il contient 21 000 termes et définitions en anglais et en français, ainsi que les termes équivalents dans 16 langues additionnelles. Egalement appelé Vocabulaire Electrotechnique International (IEV) en ligne.

Glossaire IEC - std.iec.ch/glossary
67 000 entrées terminologiques électrotechniques, en anglais et en français, extraites des articles Termes et Définitions des publications IEC parues depuis 2002. Plus certaines entrées antérieures extraites des publications des CE 37, 77, 86 et CISPR de l'IEC.

Service Clients - webstore.iec.ch/csc

Si vous désirez nous donner des commentaires sur cette publication ou si vous avez des questions contactez-nous: sales@iec.ch.

Documents
Document Sharing Hub

Full document details: IEC 61788-25 2018

IEC 61788-25

Edition 1.0 2018-08

INTERNATIONAL STANDARD

NORME INTERNATIONALE

colour inside

Superconductivity –
Part 25: Mechanical properties measurement – Room temperature tensile test on REBCO wires

Supraconductivité –
Partie 25: Mesure des propriétés mécaniques – Essai de traction à température ambiante des fils REBCO

INTERNATIONAL
ELECTROTECHNICAL
COMMISSION

COMMISSION
ELECTROTECHNIQUE
INTERNATIONALE

ICS 29.050; 77.040.10

ISBN 978-2-8322-5988-7

Warning! Make sure that you obtained this publication from an authorized distributor.
Attention! Veuillez vous assurer que vous avez obtenu cette publication via un distributeur agréé.

AVA Documents
Document Sharing Hub

® Registered trademark of the International Electrotechnical Commission
Marque déposée de la Commission Electrotechnique Internationale

Full document details: IEC 61788-25 2018

CONTENTS

FOREWORD 4
INTRODUCTION 6
1 Scope 7
2 Normative references 7
3 Terms and definitions 7
4 Principle 10
5 Apparatus 10
5.1 General 10
5.2 Testing machine 10
5.3 Extensometer 10
6 Specimen preparation 10
6.1 General 10
6.2 Length of specimen 10
6.3 Determination of cross-sectional area (S_o) 11
7 Testing conditions 11
7.1 Specimen gripping 11
7.2 Setting of extensometer 11
7.3 Testing speed 11
7.4 Test 11
8 Calculation of results 11
8.1 Modulus of elasticity (E) 11
8.2 0,2 % proof strength ($R_{p0,2\text{-}0}$ and $R_{p0,2\text{-}U}$) 12
9 Uncertainty of measurement 12
10 Test report 13
10.1 Specimen 13
10.2 Results 13
Annex A (informative) Additional information relating to Clauses 1 to 10 14
A.1 General 14
A.2 Extensometer 14
A.2.1 Double extensometer 14
A.2.2 Single extensometer 16
A.3 Elastic limit 16
A.4 Gripping force 17
A.5 Percentage elongation after fracture (A_f) 17
A.6 Condition of straining to fracture 17
A.7 Relative standard uncertainty (RSU) 17
A.8 Discretion applying this document 19
A.9 Assessment on the reliability of the test equipment 19
A.10 Additional information for test report 19
A.10.1 General 19
A.10.2 Test result 19
A.10.3 Test conditions 19
Annex B (informative) Evaluation of combined standard uncertainty for the modulus of elasticity 20
B.1 Model equation 20
B.2 Estimation of standard uncertainty 21

AVA Documents
Document Sharing Hub
Full document details: IEC 61788-25 2018

B.2.1 Precondition 21
B.2.2 Stress measurement 21
B.2.3 Size measurement 22
B.2.4 Strain measurement 23
B.2.5 Uncertainties on measurement of gauge length 24
B.3 Significant experimental factor 25
B.3.1 Initial strain rate [Osamura et al., 2014] 25
B.3.2 Thickness measurement [Osamura et al., 2014] 26
Bibliography 27

Figure 1 – Typical stress–strain curve and definition of moduli of elasticity and 0,2 % proof strengths 9
Figure A.1 – Low-mass Siam twin type extensometer 14
Figure A.2 – Low-mass double extensometer 15
Figure A.3 – An example of the extensometer provided with balance weight and vertical specimen axis 16
Figure B.1 – Strain rate dependence of the relative standard uncertainty given by Formula (B.6) 25
Figure B.2 – Relative standard uncertainty for the thickness measurement as a function of tape thickness 26

Table A.1 – Relative standard uncertainty (X_{RSU}) and coefficient of variance ($X_{<\mathrm{COV}>}$) for experimental data of E_0 and E_{U} 17
Table A.2 – Relative standard uncertainty and coefficient of variance for experimental data of $R_{\mathrm{p0,2\text{-}0}}$ and $R_{\mathrm{p0,2\text{-}U}}$ 18
Table A.3 – Value of $X_{<\mathrm{COV}>}$ for the data of the modulus of elasticity and the 0,2 % proof strength tested according to this document 19
Table B.1 – Uncertainties for experimental variables in Formula (B.6) 24
Table B.2 – Summary of standard uncertainty evaluation, where the initial strain rate and the thickness were used as 3×10^{-4} /s and 0,1 mm, respectively 25

Documents
Document Sharing Hub
Full document details: IEC 61788-25 2018

INTERNATIONAL ELECTROTECHNICAL COMMISSION

SUPERCONDUCTIVITY –

Part 25: Mechanical properties measurement – Room temperature tensile test on REBCO wires

FOREWORD

1) The International Electrotechnical Commission (IEC) is a worldwide organization for standardization comprising all national electrotechnical committees (IEC National Committees). The object of IEC is to promote international co-operation on all questions concerning standardization in the electrical and electronic fields. To this end and in addition to other activities, IEC publishes International Standards, Technical Specifications, Technical Reports, Publicly Available Specifications (PAS) and Guides (hereafter referred to as "IEC Publication(s)"). Their preparation is entrusted to technical committees; any IEC National Committee interested in the subject dealt with may participate in this preparatory work. International, governmental and non-governmental organizations liaising with the IEC also participate in this preparation. IEC collaborates closely with the International Organization for Standardization (ISO) in accordance with conditions determined by agreement between the two organizations.
2) The formal decisions or agreements of IEC on technical matters express, as nearly as possible, an international consensus of opinion on the relevant subjects since each technical committee has representation from all interested IEC National Committees.
3) IEC Publications have the form of recommendations for international use and are accepted by IEC National Committees in that sense. While all reasonable efforts are made to ensure that the technical content of IEC Publications is accurate, IEC cannot be held responsible for the way in which they are used or for any misinterpretation by any end user.
4) In order to promote international uniformity, IEC National Committees undertake to apply IEC Publications transparently to the maximum extent possible in their national and regional publications. Any divergence between any IEC Publication and the corresponding national or regional publication shall be clearly indicated in the latter.
5) IEC itself does not provide any attestation of conformity. Independent certification bodies provide conformity assessment services and, in some areas, access to IEC marks of conformity. IEC is not responsible for any services carried out by independent certification bodies.
6) All users should ensure that they have the latest edition of this publication.
7) No liability shall attach to IEC or its directors, employees, servants or agents including individual experts and members of its technical committees and IEC National Committees for any personal injury, property damage or other damage of any nature whatsoever, whether direct or indirect, or for costs (including legal fees) and expenses arising out of the publication, use of, or reliance upon, this IEC Publication or any other IEC Publications.
8) Attention is drawn to the Normative references cited in this publication. Use of the referenced publications is indispensable for the correct application of this publication.
9) Attention is drawn to the possibility that some of the elements of this IEC Publication may be the subject of patent rights. IEC shall not be held responsible for identifying any or all such patent rights.

International Standard IEC 61788-25 has been prepared by IEC technical committee 90: Superconductivity.

The text of this International Standard is based on the following documents:

FDIS	Report on voting
90/404/FDIS	90/411/RVD

Full information on the voting for the approval of this International Standard can be found in the report on voting indicated in the above table.

This document has been drafted in accordance with the ISO/IEC Directives, Part 2.

A list of all parts in the IEC 61788 series, published under the general title *Superconductivity*, can be found on the IEC website.

Documents
Document Sharing Hub

Full document details: IEC 61788-25 2018

The committee has decided that the contents of this document will remain unchanged until the stability date indicated on the IEC website under "http://webstore.iec.ch" in the data related to the specific document. At this date, the document will be

- reconfirmed,
- withdrawn,
- replaced by a revised edition, or
- amended.

IMPORTANT – The 'colour inside' logo on the cover page of this publication indicates that it contains colours which are considered to be useful for the correct understanding of its contents. Users should therefore print this document using a colour printer.

Documents
Document Sharing Hub

Full document details: IEC 61788-25 2018

INTRODUCTION

Several types of composite superconductors have now been commercialized. The rare-earth-based oxide superconductor (SC) with chemical formula $REBa_2Cu_3O_7$ is used for practical SC wires, where the rare-earth element RE is typically Y, Dy, Gd, Nd, Ho or Sm, or a combination of two or more among them. This type of practical SC wire is usually called REBCO coated conductors. A typical architecture consists of a substrate of Ni-Cr-Mo based alloy, Ni-W alloy or stainless steel, a buffer layer consisting of a plurality of oxides, a SC layer and a protection layer of Ag. The substrate and buffer layer act as template to facilitate the well-oriented SC layer. In order to resist the large electromagnetic force, the wires are often externally reinforced by laminating thin stainless steel or Cu alloy foils. Commercial composite superconductors have a high current density and a small cross-sectional area. The major application of composite superconductors is to build electrical power devices and superconducting magnets. Complex stresses and strains are applied to the composite superconducting wires when devices are manufactured and energized. In the case of superconducting magnets, large electromagnetic forces are experienced by the windings due to the combination of high magnetic fields and high current density. It is therefore indispensable to determine the mechanical properties of the practical REBCO wires.

Documents
Document Sharing Hub

Full document details: IEC 61788-25 2018

SUPERCONDUCTIVITY –

Part 25: Mechanical properties measurement – Room temperature tensile test on REBCO wires

1 Scope

This part of IEC 61788 specifies the test method and procedures for testing tensile mechanical properties of REBCO superconductive composite tapes at room temperature. This test is used to measure the modulus of elasticity and 0,2 % proof strength. The values for elastic limit, fracture strength and percentage elongation after fracture serve only as a reference. This document applies to samples having a rectangular cross-section with an area of 0,12 mm^2 to 6,0 mm^2 (corresponding to the tapes with width of 2,0 mm to 12,0 mm and thickness of 0,06 mm to 0,5 mm).

2 Normative references

The following documents are referred to in the text in such a way that some or all of their content constitutes requirements of this document. For dated references, only the edition cited applies. For undated references, the latest edition of the referenced document (including any amendments) applies.

ISO 376, *Metallic materials – Calibration of force-proving instruments used for the verification of uniaxial testing machines*

ISO 7500-1, *Metallic materials – Calibration and verification of static uniaxial testing machines – Part 1: Tension/compression testing machines – Calibration and verification of the force-measuring system*

ISO 9513, *Metallic materials – Calibration of extensometer systems used in uniaxial testing*

3 Terms and definitions

For the purposes of this document, the following terms and definitions apply.

ISO and IEC maintain terminological databases for use in standardization at the following addresses:

- IEC Electropedia: available at http://www.electropedia.org/
- ISO Online browsing platform: available at http://www.iso.org/obp

3.1
tensile stress
R
tensile force divided by the original cross-sectional area of the test piece at any moment during the test

3.2
tensile strain
A
displacement increment divided by initial gauge length of extensometers at any moment during the tensile test

AVA Documents
Document Sharing Hub

Full document details: IEC 61788-25 2018

3.3
extensometer gauge length
L_G
length of the parallel portion of the test piece used for the measurement of elongation by means of an extensometer

3.4
distance between grips
L_0
inward distance between grips that hold a test specimen in position before the test is started

3.5
modulus of elasticity
E
slope of the straight portion of the stress–strain curve in the elastic deformation region

SEE: Figure 1

Note 1 to entry: The straight portion of the initial stress–strain curve is very narrow as indicated in Figure 1. To measure this quantity with a small standard uncertainty, the use of double extensometer systems will be an appropriate technique. In this sense, the quantity of E_U should be a representative data for the present text, while E_0 should be reported only when the measure is performed by means of double extensometer system.

Note 2 to entry: In the case of composite superconductor, however, it can be determined differently depending upon the adopted procedures; one from the initial loading curve by the zero offset line expressed as E_0, the other one given by the slope of line during unloading, expressed as E_U. The dotted straight lines drawn along the initial loading curve and the unloading one in Figure 1 b) are only a guide to the eye for determining the slope.

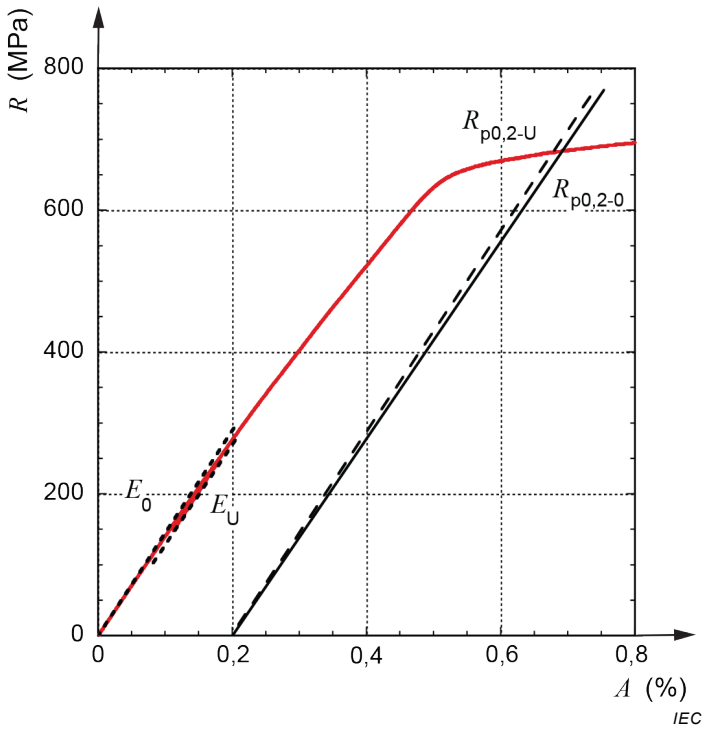

a)

Documents
Document Sharing Hub
Full document details: IEC 61788-25 2018

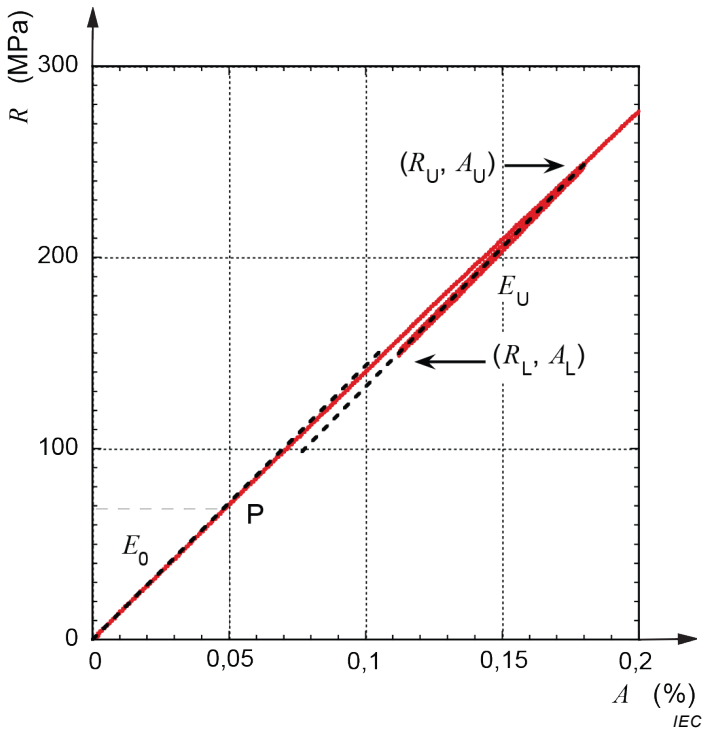

b)

The red curves are the observed data and the black continuous and black dotted straight lines are additional lines to indicate how to determine the moduli of elasticity and 0,2 % proof strengths.

Figure 1 – Typical stress–strain curve and definition of moduli of elasticity and 0,2 % proof strengths

3.6
0,2 % proof strength
$R_{p0,2}$
stress value where the superconductive composite wire yields by 0,2 %

SEE: Figure 1

3.7
fracture strength
R_f
tensile stress at the fracture

3.8
tensile stress at elastic limit
R_{el}
tensile force divided by the original cross-sectional area at the elastic limit corresponding to the transition from elastic to plastic deformation indicated by point P in Figure 1 b)

3.9
tensile strain at elastic limit
A_{el}
strain at the elastic limit corresponding to the transition from elastic to plastic deformation indicated by point P in Figure 1 b)

Documents
Document Sharing Hub
Full document details: IEC 61788-25 2018

4 Principle

The test consists of straining a test piece by a tensile force, generally to fracture, for the purpose of determining the modulus of elasticity and 0,2 % proof strength described in Clause 1.

Depending on the employed strain measuring method, however, the quantities determined by the present test should be limited. When using the conventional single extensometer system, the determination of E_U and $R_{p0,2\text{-}U}$ is recommended. On the other hand, all E_0, E_U, $R_{p0,2\text{-}0}$ and $R_{p0,2\text{-}U}$ can be determined by using double extensometer system, because of its capability to compensate the bending effects of the specimen and to guarantee a proper determination of the modulus of elasticity.

Additional information relating to Clauses 1 to 10 is given in Annex A.

5 Apparatus

5.1 General

The test machine and the extensometer shall conform to ISO 7500-1 and ISO 9513, respectively. The calibration shall obey ISO 376. The special requirement for this document is presented in 5.2 and 5.3.

5.2 Testing machine

A tensile machine control system that provides a constant cross head speed shall be used. Grips shall have a structure and strength appropriate for the test specimen and shall be constructed to provide a firm connection with the tensile machine. The faces of the grips shall be filed or knurled, or otherwise roughened, so that the test specimen will not slip during testing. Gripping may be a screw type, or pneumatically or hydraulically actuated.

5.3 Extensometer

The mass of the extensometer shall be 30 g or less, so as not to affect the mechanical properties of superconductive composite wires. The mass of the extensometers shall be balanced around the wire to avoid any non-alignment force. The generation of bending moments due to the non-alignment force shall be prevented (see Clause A.2).

6 Specimen preparation

6.1 General

Bending and/or pre-loading shall be prevented when the specimen is handled manually.

6.2 Length of specimen

The length of the test specimen shall be the sum of the inward distance between grips and the grip lengths. The minimum specimen length (L_{sm}) shall be calculated as,

$$L_{sm} = 2 \times L_g + L_G + 2 \times L_x \quad (1)$$

where L_g is the grip length, L_G is the gauge length of extensometer. L_x is the free gap distance between grip and extensometer and shall meet the condition,

$$L_x \geq 0{,}7 \times L_G \quad (2)$$

AVA Documents Document Sharing Hub

6.3 Determination of cross-sectional area (S_o)

A micrometer or other dimension-measuring apparatus shall be used to obtain the cross-sectional area of the specimen after the insulation coating has been removed. The cross-sectional area of tape-shaped wires shall be obtained from the product of its thickness and width.

7 Testing conditions

7.1 Specimen gripping

When the test specimen is mounted on the grips of the tensile machine, the test specimen and tensile loading axis shall be aligned to a straight line. Sand paper may be inserted as a cushioning material to prevent the gripped surfaces of the specimen from slipping and fracturing. During mounting of the sample, bending or deformation shall be prevented.

7.2 Setting of extensometer

When mounting the extensometer, deformation of the test specimen shall be prevented like the indentation due to extensometer's sharp edges which might cause an early fracture of the specimen. The extensometer shall be mounted at the centre between the grips, aligning the measurement direction with the specimen axis direction. During mounting, pre-loading the specimen shall be prevented. After installation, loading shall be physically zeroed.

7.3 Testing speed

The initial strain rate shall be slower than 10^{-4} s^{-1} during the test using the extensometer (see B.3.1).

7.4 Test

The tensile machine shall be started after the testing speed has been set to the specified level. The stress and strain calculated from the output signals of load cell and extensometer, respectively, shall be plotted on the ordinate and abscissa of the diagram as shown in Figure 1 a) and b). When the strain has reached a value between 0,1 % and 0,2 % as indicated A_U, the stress shall be reduced by approximately 30 % to 40 % of R_U to R_L. Then, the stress shall be increased again and the test should be continued to the point where the specimen is fractured.

Prior to the start of any material test programme, the test equipment shall be checked completely using similar size wires of known elastic properties (see Clause A.9).

8 Calculation of results

8.1 Modulus of elasticity (E)

Modulus of elasticity shall be calculated in general using the following formula and the straight portion of the initial loading curve and of the unloading one as shown in Figure 1 b). Appropriate software for data evaluation, with the function of enlargement of the stress–strain diagram especially around the region where the deviation from linearity is expected, should be used for post analyses of the plotted data.

$$E = \Delta F/(S_o \Delta A) \quad (3)$$

Documents
Document Sharing Hub
Full document details: IEC 61788-25 2018

where

E is the modulus of elasticity (GPa);

ΔF is the increment of the force (N);

ΔA is the increment of strain corresponding to ΔF;

S_o is the original cross-sectional area of the test specimen (mm^2).

Since the unloading process is carried out at the strain indicated by the point A_U in Figure 1, the same Formula (3) is used for both the unloading modulus (E_U) and the initial loading one (E_0). It is recommended to measure the unloading curve at the starting point A_U, where A_U is recommended to be approximately 0,1 % to 0,2 %.

After the test, the results shall be examined using the ratio E_0/E_U. The ratio shall satisfy the condition as given in Formula (4) in which Δ = 0,2 [Osamura et al., 2008 and 2014].

$$1-\Delta < \frac{E_0}{E_U} < 1+\Delta \tag{4}$$

When it does not satisfy the condition, the test is judged not to be valid. Then the test shall be repeated after checking the experimental procedure according to the present test method.

8.2 0,2 % proof strength ($R_{p0,2\text{-}0}$ and $R_{p0,2\text{-}U}$)

The 0,2 % proof strength of the composite is determined in two ways from the initial loading part and the unloading/reloading part of the stress–strain curve as shown in Figure 1.

The 0,2 % proof strength under loading $R_{p0,2\text{-}0}$ shall be determined as follows: the initial linear portion of the loading line of the stress–strain curve is moved to 0,2 % along the strain axis (0,2 % offset line under loading) and the point at which this linear line intersects the stress–strain curve shall be defined as the 0,2 % proof strength under loading.

The 0,2 % proof strength under unloading $R_{p0,2\text{-}U}$ shall be determined as follows: the initial linear portion under unloading is moved parallel to the 0,2 % offset strain point. The intersection of this line with the stress–strain curve determines the point that shall be defined as the 0,2 % proof strength under unloading.

Each 0,2 % proof strength shall be calculated using Formula (5):

$$R_{p0,2\text{-}i} = F_i / S_o \tag{5}$$

where

$R_{p0,2\text{-}i}$ is the 0,2 % proof strength at each point (MPa);

F_i is the force at each point (N);

S_o is the original cross-sectional area of the test specimen (mm^2);

i indicates 0 or U.

9 Uncertainty of measurement

Unless otherwise specified, measurements shall be carried out in a temperature that can range from 285 K to 305 K. A force measuring cell with the relative standard uncertainty less than 0,1 %, valid between zero and the maximum force value shall be used. The extensometers should have the relative standard uncertainty of strain less than 0,5 %. The displacement measuring transducer (e.g. LVDT [linear variable differential transformer]) used for the calibration should have the relative standard uncertainty less than 0,1 %.

Documents
Document Sharing Hub

Full document details: IEC 61788-25 2018

The value of relative standard uncertainty corresponding to the number of specimens tested of measured moduli of elasticity E_0 and E_U, proof strength $R_{p0,2\text{-}0}$ and $R_{p0,2\text{-}U}$ shall be calculated using Formula (6):

$$X_{RSU}(N) = X_{<COV>} / \sqrt{N} \tag{6}$$

where

$X_{RSU}(N)$ is the value of relative standard uncertainty;

N is the number of specimens tested;

$X_{<COV>}$ is the value of averaged coefficient of variation for all data tested.

According to the international round robin test (RRT, see Clause A.7), the parameter $X_{<COV>}$ has been evaluated as follows: 7,0 %, 4,6 %, 4,3 % and 4,1 % for E_0, E_U, $R_{p0,2\text{-}0}$ and $R_{p0,2\text{-}U}$, respectively.

Evaluation of combined standard uncertainty for the modulus of elasticity is given in Annex B.

10 Test report

10.1 Specimen

a) Name of the manufacturer of the specimen

b) Classification and/or symbol

c) Lot number

d) Cross-sectional shape and dimension of the wire

e) Materials comprising the substrate and stabilizer

10.2 Results

Results of the following mechanical properties shall be reported:

a) Modulus of elasticity (E_0 and E_U)

b) 0,2 % proof strengths ($R_{p0,2\text{-}0}$ and $R_{p0,2\text{-}U}$)

Documents
Document Sharing Hub

Full document details: IEC 61788-25 2018

Annex A
(informative)

Additional information relating to Clauses 1 to 10

A.1 General

This document is based on the axial stress–strain measurements at room temperature. Mechanical properties in the perpendicular orientation (c-axis) are also of importance in the manufacture of superconducting devices; they are not treated in this document. For wider strips, bi-axial stress–strain measurements done with bi-axial strain gauges are not uncommon but these measurements too are outside the scope of this document.

Annex A gives reference information on the variable factors that can seriously affect the tensile test method, together with some precautions to be observed when using this document.

A.2 Extensometer

A.2.1 Double extensometer

In the international RRT for REBCO tapes, a double extensometer system consisting of two single extensometers was generally used to record two signals to be averaged by software or one signal already averaged by the extensometer system itself.

Typical advanced low-mass double extensometers are shown in Figures A.1 and A.2.

Dimensions in millimetres

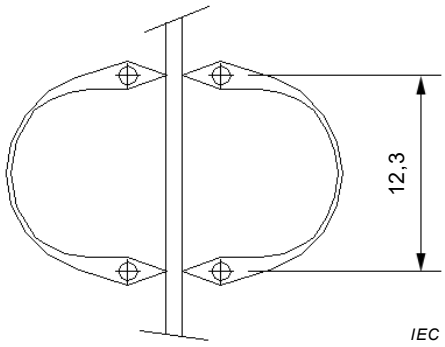

Figure A.1 – Low-mass Siam twin type extensometer

Figure A.1 shows a low-mass Siam twin type extensometer with a gauge length of 12,3 mm (total mass 0,5 g). The two extensometers are wired together into a single type extensometer, thus averaging the two displacement records electrically.

Documents
Document Sharing Hub
Full document details: IEC 61788-25 2018

Dimensions in millimetres

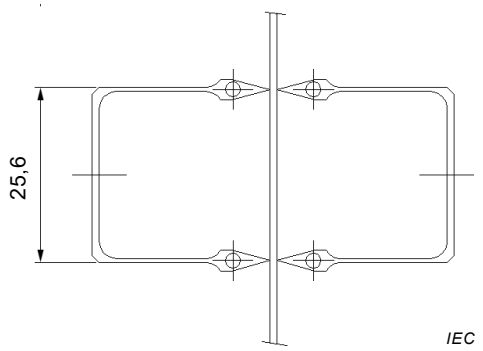

Figure A.2 – Low-mass double extensometer

Figure A.2 shows a low-mass double extensometer with a gauge length of 25,6 mm (total mass 3,0 g). Each of the two extensometers is a single type extensometer; the averaging should be carried out by software.

Documents
Document Sharing Hub
Full document details: IEC 61788-25 2018

A.2.2 Single extensometer

Figure A.3 shows a single extensometer with total mass of 30 g together with a balance weight.

Dimensions in millimetres

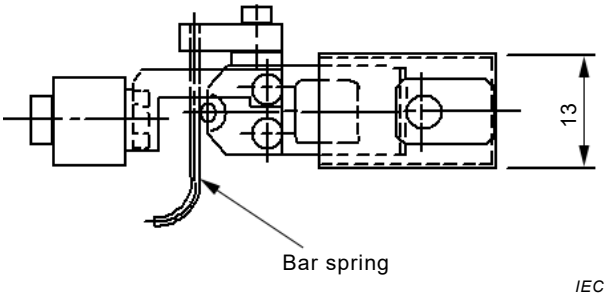

a) top view

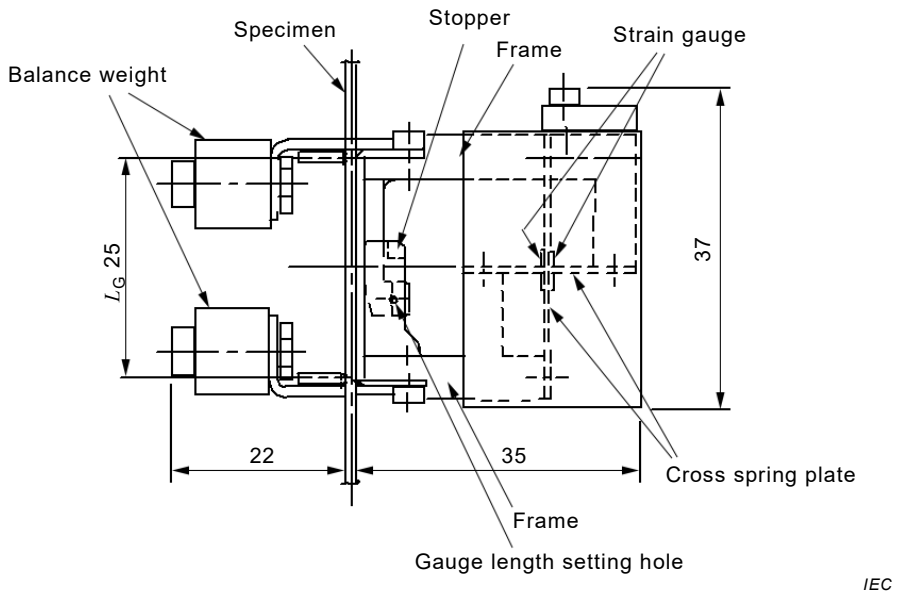

L_G gauge length

b) side view

Figure A.3 – An example of the extensometer provided with balance weight and vertical specimen axis

A.3 Elastic limit

Figure 1 shows the result of tensile test at room temperature for a REBCO coated conductor. Mechanical properties are usually divided into two regions of elastic and plastic deformation. The macroscopic yielding took place at $R_{p0,2}$ = 682 MPa. When the stress–strain curve is precisely analysed, a small change of slope started just after elastic limit (el) as point P shown in Figure 1 b). The tensile stress and strain at elastic limit are defined in principle as corresponding to the transition of elastic to plastic deformation as shown in Figure 1 b). The elastic strain limit is lying near A_{el} = 0,05 %. However their quantitative determination is difficult because the slope changes very gradually.

Documents
Document Sharing Hub
Full document details: IEC 61788-25 2018