IEC 61800-3

Edition 3.0 2017-02
REDLINE VERSION

INTERNATIONAL STANDARD

colour inside

Adjustable speed electrical power drive systems – Part 3: EMC requirements and specific test methods

IEC 61800-3:2017-02 RLV(en)

Documents
Document Sharing Hub

Full document details: IEC 61800-3 2017 RLV

THIS PUBLICATION IS COPYRIGHT PROTECTED

Copyright © 2017 IEC, Geneva, Switzerland

All rights reserved. Unless otherwise specified, no part of this publication may be reproduced or utilized in any form or by any means, electronic or mechanical, including photocopying and microfilm, without permission in writing from either IEC or IEC's member National Committee in the country of the requester. If you have any questions about IEC copyright or have an enquiry about obtaining additional rights to this publication, please contact the address below or your local IEC member National Committee for further information.

IEC Central Office
3, rue de Varembé
CH-1211 Geneva 20
Switzerland

Tel.: +41 22 919 02 11
Fax: +41 22 919 03 00
info@iec.ch
www.iec.ch

About the IEC
The International Electrotechnical Commission (IEC) is the leading global organization that prepares and publishes International Standards for all electrical, electronic and related technologies.

About IEC publications
The technical content of IEC publications is kept under constant review by the IEC. Please make sure that you have the latest edition, a corrigenda or an amendment might have been published.

IEC Catalogue - webstore.iec.ch/catalogue
The stand-alone application for consulting the entire bibliographical information on IEC International Standards, Technical Specifications, Technical Reports and other documents. Available for PC, Mac OS, Android Tablets and iPad.

IEC publications search - www.iec.ch/searchpub
The advanced search enables to find IEC publications by a variety of criteria (reference number, text, technical committee,…). It also gives information on projects, replaced and withdrawn publications.

IEC Just Published - webstore.iec.ch/justpublished
Stay up to date on all new IEC publications. Just Published details all new publications released. Available online and also once a month by email.

Electropedia - www.electropedia.org
The world's leading online dictionary of electronic and electrical terms containing 20 000 terms and definitions in English and French, with equivalent terms in 16 additional languages. Also known as the International Electrotechnical Vocabulary (IEV) online.

IEC Glossary - std.iec.ch/glossary
65 000 electrotechnical terminology entries in English and French extracted from the Terms and Definitions clause of IEC publications issued since 2002. Some entries have been collected from earlier publications of IEC TC 37, 77, 86 and CISPR.

IEC Customer Service Centre - webstore.iec.ch/csc
If you wish to give us your feedback on this publication or need further assistance, please contact the Customer Service Centre: csc@iec.ch.

AVA Documents
Document Sharing Hub

Full document details: IEC 61800-3 2017 RLV

IEC 61800-3

Edition 3.0 2017-02
REDLINE VERSION

INTERNATIONAL STANDARD

colour inside

Adjustable speed electrical power drive systems – Part 3: EMC requirements and specific test methods

INTERNATIONAL
ELECTROTECHNICAL
COMMISSION

ICS 29.200; 33.100.01

ISBN 978-2-8322-4007-6

Warning! Make sure that you obtained this publication from an authorized distributor.

® Registered trademark of the International Electrotechnical Commission

Documents
Document Sharing Hub

Full document details: IEC 61800-3 2017 RLV

CONTENTS

FOREWORD 7
1 Scope ~~and object~~ 9
2 Normative references 10
3 Terms and definitions 13
~~3.1 Overview~~ .....
3.1 Installation and its content 13
3.2 Intended use 15
3.3 Location, ports and interfaces 16
3.4 Components of the PDS 19
3.5 Phenomena-related definitions 20
4 Common requirements 21
4.1 General conditions 21
4.2 Tests 21
4.2.1 Conditions 21
4.2.2 Test report 22
4.3 Documentation for the user 23
5 Immunity requirements 24
5.1 General conditions 24
5.1.1 Acceptance criteria (performance criteria) 24
5.1.2 Selection of performance type 24
5.1.3 Conditions during the test 26
5.2 Basic immunity requirements – low-frequency disturbances 27
5.2.1 Common principle 27
5.2.2 Harmonics and commutation notches/voltage distortion 27
5.2.3 Voltage deviations ~~(variations, changes, fluctuations)~~, dips and short interruptions 30
5.2.4 Voltage unbalance and frequency variations 33
5.2.5 Supply influences – Magnetic fields 35
5.3 Basic immunity requirements – High-frequency disturbances 35
5.3.1 Conditions 35
5.3.2 First environment 35
5.3.3 Second environment 36
5.3.4 Immunity against electromagnetic fields 39
5.4 Application of immunity requirements – Statistical aspect 39
6 Emission 40
6.1 General emission requirements 40
6.2 Basic low-frequency emission limits 42
6.2.1 Compliance method 42
6.2.2 Commutation notches 42
6.2.3 Harmonics and interharmonics 42
6.2.4 Voltage fluctuations 43
6.2.5 Emissions in the frequency range from 2 kHz to 9 kHz 44
6.2.6 Common mode harmonic emission (low-frequency common mode voltage) 45
6.3 Conditions related to high-frequency emission measurement 45
6.3.1 General requirements 45

Documents
Document Sharing Hub
Full document details: IEC 61800-3 2017 RLV

6.3.2 Connection requirements ... 50
6.4 Basic high-frequency emission limits ... 50
6.4.1 Equipment of categories C1 and C2 ... 50
6.4.2 Equipment of category C3 ... 53
6.5 Engineering practice ... 54
6.5.1 PDS of category C4 ... 54
6.5.2 Limits outside the boundary of an installation, for a PDS of category C4 – Example of propagation of disturbances ... 55
6.6 Application of emission requirements – Statistical aspects ... 58
Annex A (informative) EMC techniques ... 59
~~A.1 General overview of EMC phenomena ...~~
A.1 Application of PDSs and EMC ... 61
A.2 Load conditions regarding high-frequency phenomena ... 62
A.2.1 Load conditions during emission tests ... 62
A.2.2 Load conditions during immunity tests ... 62
A.2.3 Load test ... 62
~~A.3 Some immunity aspects ...~~
A.3 Immunity to power frequency magnetic fields ... 63
A.4 High-frequency emission measurement techniques ... 64
A.4.1 Impedance/artificial mains network (AMN) ... 64
A.4.2 Performing high-frequency in situ emission tests ... 66
A.4.3 Established experience with high power PDSs ... 68
Annex B (informative) Low-frequency phenomena ... 69
B.1 Commutation notches ... 69
B.1.1 Occurrence – description ... 69
B.1.2 Calculation ... 71
B.1.3 Recommendations regarding commutation notches ... 72
B.2 Definitions related to harmonics and interharmonics ... 73
B.2.1 General discussion ... 73
B.2.2 Phenomena related definitions ... 74
B.2.3 Conditions of application ... 77
B.3 Application of harmonic emission standards ... 81
B.3.1 General ... 81
B.3.2 Public networks ... 82
B.3.3 Summation methods for harmonics in an installation – Practical rules ... 88
B.4 Installation rules – Assessment of harmonic compatibility ... 90
B.4.1 Low power industrial three-phase system ... 90
B.4.2 Large industrial system ... 92
B.4.3 Interharmonics and voltages or currents at higher frequencies ... 94
B.5 Voltage unbalance ... 95
B.5.1 Origin ... 95
B.5.2 Definition and assessment ... 95
B.5.3 Effect on PDSs ... 98
B.6 Voltage dips – Voltage fluctuations ... 98
B.6.1 Voltage dips ... 98
B.6.2 Voltage fluctuation ... 101
B.7 Verification of immunity to low frequency disturbances ... 101
Annex C (informative) Reactive power compensation – Filtering ... 102

AVA Documents
Document Sharing Hub
Full document details: IEC 61800-3 2017 RLV

C.1 Installation 102
C.1.1 Usual operation 102
C.1.2 Power definitions under distorted conditions 103
C.1.3 Practical solutions 104
C.1.4 Reactive power compensation 105
C.1.5 Filtering methods 109
C.2 Reactive power and harmonics 111
C.2.1 Usual installation mitigation methods 111
C.2.2 Other solutions 113
Annex D (informative) Considerations on high-frequency emission 117
D.1 User guidelines 117
D.1.1 Expected emission of PDSs 117
D.1.2 Guidelines 119
D.2 Safety and RFI-filtering in power supply systems 121
D.2.1 Safety and leakage currents 121
D.2.2 Safety and RFI-filtering in power supply systems isolated from earth 121
Annex E (informative) EMC analysis and EMC plan for PDS of category C4 123
E.1 General – System EMC analysis applied to PDSs 123
E.1.1 Electromagnetic environment 123
E.1.2 System EMC analysis techniques 124
E.2 Example of EMC plan ~~for general applications~~ 125
E.2.1 Project data and description 125
E.2.2 Electromagnetic environment analysis 126
E.2.3 EMC analysis 127
E.2.4 Establishment of installation rules 127
E.2.5 Formal result and maintenance 129
E.3 Example of supplement to EMC plan for particular application 129
E.3.1 Electromagnetic environment complementary analysis 129
E.3.2 EMC analysis 131
Bibliography 133

Figure 1 – ~~Definition of the~~ Installation and its content 14
Figure 2 – Internal interfaces of the PDS and examples of ports 17
Figure 3 – Power interfaces of a PDS with common DC BUS 18
Figure 4 – Power interfaces with common input transformer 18
Figure 5 – Example for a typical cable arrangement for measurements in 3 m separation distance, for a table-top or wall-mounted equipment, top view 48
Figure 6 – Example for a typical cable arrangement for measurements in 3 m separation distance for a table-top or wall-mounted equipment, side view 49
Figure 7 – Example for a typical test set up for measurement of conducted and/or radiated disturbances from a floor-standing PDS, 3D view 50
Figure 8 – Propagation of disturbances 56
Figure 9 – Propagation of disturbances in installation with a PDS rated > 1 000 V 56
~~Figure A.1 – Coordination between disturbance and immunity ..... ~~
Figure B.1 – Typical waveform of commutation notches – Distinction from non-repetitive transient 69
Figure B.2 – PCC, IPC, installation current ratio and R_{SI} 80

AVA Documents
Document Sharing Hub
Full document details: IEC 61800-3 2017 RLV

Figure B.3 – PCC, IPC, installation current ratio and R_{SC} 81
Figure B.4 – Assessment of the harmonic emission of a PDS 84
~~Figure B.5 – Load conditions for the measurement of harmonic emission of a PDS .....~~
Figure B.5 – Test set-up with mechanical load 86
Figure B.6 – Test set-up with electrical load replacing the loaded motor 86
Figure B.7 – Test set-up with resistive load 87
Figure B.8 – Assessment of harmonic emission where PDS is used (apparatus, systems or installations) 91
Figure C.1 – Reactive power compensation 106
Figure C.2 – Simplified diagram of an industrial network 108
Figure C.3 – Impedance versus frequency of the simplified network 108
Figure C.4 – Example of passive filter battery 110
Figure C.5 – Example of inadequate solution in reactive power compensation 112
Figure C.6 – VSI PWM active filter topologies 114
Figure C.7 – Boost mode converter 115
Figure C.8 – Front-End inverter system 116
Figure D.1 – Conducted emission of various unfiltered PDSs 118
Figure D.2 – Expected radiated emission of PDS up to rated voltage 400 V Peak values normalised at 10 m 119
Figure D.3 – Safety and filtering 122
Figure E.1 – Interaction between systems and EM environment 123
Figure E.2 – Zone concept 124
Figure E.3 – Example of drive 125

Table 1 – Subclauses containing alternative test methods 23
~~Table 2 – Minimum immunity requirements for harmonics and commutation notches/voltage distortion on power ports of low voltage PDSs .....~~
Table 2 – Criteria to prove the acceptance of a PDS against electromagnetic disturbances 26
Table 3 – Minimum immunity requirements for total harmonic distortion on power ports of low voltage PDSs 28
~~Table 4 – Minimum immunity requirements for harmonics and commutation notches/voltage distortion on auxiliary low voltage power ports of PDSs .....~~
Table 4 – Minimum immunity requirements for individual harmonic orders on power ports of low voltage PDSs 28
Table 5 – Minimum immunity requirements for commutation notches on power ports of low voltage PDSs 29
Table 6 – Minimum immunity requirements for harmonics and commutation notches/ voltage distortion on main power ports of PDSs of rated voltage above 1 000 V 30
Table 7 – Minimum immunity requirements for voltage deviations, dips and short interruptions on power ports of low voltage PDSs 31
Table 8 – Minimum immunity requirements for voltage deviations, dips and short interruptions on main power ports of rated voltage above 1 000 V of PDSs 32
Table 9 – Minimum immunity requirements for voltage deviations, dips and short interruptions on auxiliary low voltage power ports of PDSs 33

Documents
Document Sharing Hub
Full document details: IEC 61800-3 2017 RLV

Table 10 – Minimum immunity requirements for voltage unbalance and frequency variations on power ports of low voltage PDSs 34
Table 11 – Minimum immunity requirements for voltage unbalance and frequency variations on main power ports of rated voltage above 1 000 V of PDSs 34
Table 12 – Minimum immunity requirements for voltage unbalance and frequency variations on auxiliary low voltage power ports of PDSs 35
Table 13 – Minimum immunity requirements for PDSs intended for use in the first environment 36
Table 14 – Minimum immunity requirements for PDSs intended for use in the second environment 38
Table 15 – Summary of emission requirements 41
Table 16 – Limits for mains terminal disturbance voltage in the frequency band 150 kHz to 30 MHz 51
Table 17 – Limits for electromagnetic radiation disturbance in the frequency band 30 MHz to 1 000 MHz 52
Table 18 – Limits of disturbance voltage on the power interface 53
Table 19 – Limits for mains terminal disturbance voltage in the frequency band 150 kHz to 30 MHz for a PDS in the second environment – PDS of category C3 53
Table 20 – Limits for electromagnetic radiation disturbance in the frequency band 30 MHz to 1 000 MHz for a PDS in the second environment – PDS of category C3 54
Table 21 – Limits for propagated disturbance voltage ("outside" in the first environment) 57
Table 22 – Limits for propagated disturbance voltage ("outside" in the second environment) 57
Table 23 – Limits for propagated electromagnetic disturbance above 30 MHz 57
Table 24 – Limits for electromagnetic disturbance below 30 MHz 58
~~Table A.1 – EMC overview ....~~
Table B.1 – Maximum allowable depth of commutation notches at the PC 72
Table B.2 – Harmonic current emission requirements relative to the total current of the agreed power at the PCC or IPC 93
Table B.3 – Verification plan for immunity to low frequency disturbances 101
Table E.1 – EM interaction between subsystems and environment 125
Table E.2 – Frequency analysis 131

Documents
Document Sharing Hub
Full document details: IEC 61800-3 2017 RLV

INTERNATIONAL ELECTROTECHNICAL COMMISSION

ADJUSTABLE SPEED ELECTRICAL POWER DRIVE SYSTEMS –

Part 3: EMC requirements and specific test methods

FOREWORD

1) The International Electrotechnical Commission (IEC) is a worldwide organization for standardization comprising all national electrotechnical committees (IEC National Committees). The object of IEC is to promote international co-operation on all questions concerning standardization in the electrical and electronic fields. To this end and in addition to other activities, IEC publishes International Standards, Technical Specifications, Technical Reports, Publicly Available Specifications (PAS) and Guides (hereafter referred to as "IEC Publication(s)"). Their preparation is entrusted to technical committees; any IEC National Committee interested in the subject dealt with may participate in this preparatory work. International, governmental and non-governmental organizations liaising with the IEC also participate in this preparation. IEC collaborates closely with the International Organization for Standardization (ISO) in accordance with conditions determined by agreement between the two organizations.
2) The formal decisions or agreements of IEC on technical matters express, as nearly as possible, an international consensus of opinion on the relevant subjects since each technical committee has representation from all interested IEC National Committees.
3) IEC Publications have the form of recommendations for international use and are accepted by IEC National Committees in that sense. While all reasonable efforts are made to ensure that the technical content of IEC Publications is accurate, IEC cannot be held responsible for the way in which they are used or for any misinterpretation by any end user.
4) In order to promote international uniformity, IEC National Committees undertake to apply IEC Publications transparently to the maximum extent possible in their national and regional publications. Any divergence between any IEC Publication and the corresponding national or regional publication shall be clearly indicated in the latter.
5) IEC itself does not provide any attestation of conformity. Independent certification bodies provide conformity assessment services and, in some areas, access to IEC marks of conformity. IEC is not responsible for any services carried out by independent certification bodies.
6) All users should ensure that they have the latest edition of this publication.
7) No liability shall attach to IEC or its directors, employees, servants or agents including individual experts and members of its technical committees and IEC National Committees for any personal injury, property damage or other damage of any nature whatsoever, whether direct or indirect, or for costs (including legal fees) and expenses arising out of the publication, use of, or reliance upon, this IEC Publication or any other IEC Publications.
8) Attention is drawn to the Normative references cited in this publication. Use of the referenced publications is indispensable for the correct application of this publication.
9) Attention is drawn to the possibility that some of the elements of this IEC Publication may be the subject of patent rights. IEC shall not be held responsible for identifying any or all such patent rights.

This redline version of the official IEC Standard allows the user to identify the changes made to the previous edition. A vertical bar appears in the margin wherever a change has been made. Additions are in green text, deletions are in strikethrough red text.

Documents
Document Sharing Hub

Full document details: IEC 61800-3 2017 RLV

International Standard IEC 61800-3 has been prepared by subcommittee 22G: Adjustable speed electric drive systems incorporating semiconductor power converters, of IEC technical committee 22: Power electronic systems and equipment.

This third edition cancels and replaces the second edition published in 2004 and Amendment 1:2011. This edition constitutes a technical revision.

This edition includes the following significant technical changes with respect to the previous edition:

a) clarification of requirements for the test report, particularly when a number of alternative test methods exist;

b) introduction of a more detailed test setup for radiated emission measurements, along with the introduction of a 3 m measurement distance for small size equipment;

c) general updates in the informative annexes.

The text of this standard is based on the following documents:

FDIS	Report on voting
22G/347/FDIS	22G/350/RVD

Full information on the voting for the approval of this International Standard can be found in the report on voting indicated in the above table.

This publication has been drafted in accordance with the ISO/IEC Directives, Part 2, and with IEC Guide 107.

A list of all parts in the IEC 61800 series, published under the general title *Adjustable speed electrical power drive systems*, can be found on the IEC website.

The committee has decided that the contents of this document will remain unchanged until the stability date indicated on the IEC website under "http://webstore.iec.ch" in the data related to the specific document. At this date, the document will be

- reconfirmed,
- withdrawn,
- replaced by a revised edition, or
- amended.

IMPORTANT – The "colour inside" logo on the cover page of this publication indicates that it contains colours which are considered to be useful for the correct understanding of its contents. Users should therefore print this publication using a colour printer.

Documents
Document Sharing Hub

Full document details: IEC 61800-3 2017 RLV

ADJUSTABLE SPEED ELECTRICAL POWER DRIVE SYSTEMS –

Part 3: EMC requirements and specific test methods

1 Scope ~~and object~~

This part of IEC 61800 specifies electromagnetic compatibility (EMC) requirements for power drive systems (PDSs, defined in 3.1). These are adjustable speed AC or DC motor drives. Requirements are stated for PDSs with converter input and/or output voltages (line-to-line voltage), up to 35 kV AC RMS.

PDSs covered by this document are those installed in residential, commercial and industrial locations with the exception of traction applications, and electric vehicles. PDSs ~~may~~ can be connected to either industrial or public power distribution networks. Industrial networks are supplied by a dedicated distribution transformer, which is usually adjacent to or inside the industrial location, and supplies only industrial customers. Industrial networks can also be supplied by their own electric generating equipment. On the other hand, PDSs can be directly connected to low-voltage public mains networks which also supply ~~domestic~~ residential premises, and in which the neutral is generally earthed (grounded).

The scope of this part of IEC 61800, related to EMC, includes a broad range of PDSs from a few hundred watts to hundreds of megawatts. PDSs are often included in a larger system. The system aspect is not covered by this document but guidance is provided in the informative annexes.

The requirements have been selected so as to ensure EMC for PDSs at residential, commercial and industrial locations. The requirements cannot, however, cover extreme cases which ~~may~~ can occur with an extremely low probability. Changes in the EMC behaviour of a PDS, as a result of fault conditions, are not taken into account.

The object of this document is to define the limits and test methods for a PDS according to its intended use. This document includes immunity requirements and requirements for electromagnetic emissions.

NOTE 1 Emission can cause interference in other electronic equipment (for example radio receivers, measuring and computing devices). Immunity is ~~required~~ meant to protect the equipment from continuous and transient conducted and radiated disturbances including electrostatic discharges. The emission and immunity requirements are balanced against each other and against the actual environment of the PDS.

This document defines the minimum EMC requirements for a PDS.

Immunity requirements are given according to the environment classification. Low-frequency emission requirements are given according to the nature of the supply network. High-frequency emission requirements are given according to four categories of intended use, which cover both environment and bringing into operation.

As a product standard, this document ~~may~~ can be used for the assessment of PDS. It ~~may~~ can also be used for the assessment of complete drive modules (CDM) or basic drive modules (BDM) (see 3.1), which can be marketed separately.

This document contains

- conformity assessment requirements for products to be placed on the market, and

AVA Documents Document Sharing Hub

Full document details: IEC 61800-3 2017 RLV

- recommended engineering practice (see 6.5) for cases where high frequency emissions cannot be measured before the equipment is placed on the market (such PDSs are defined in 3.2.7 as category C4).

NOTE 2 The first edition of IEC 61800-3 identified that the intended use could require engineering for putting into service. This was done by the "restricted distribution mode". Equipment ~~that used to be covered by the~~ formerly identified under "restricted distribution mode" is now covered ~~in the second edition~~ by categories C2 and C4 (see 3.2).

This document is intended as a complete EMC product standard for the EMC conformity assessment of products of categories C1, C2 and C3, when placing them on the market (see definitions 3.2.4 to 3.2.6).

Radio frequency emission of equipment of category C4 is only assessed when it is installed in its intended location. It is therefore treated as a fixed installation, for which this document gives rules of engineering practice in 6.5 and Annex E, although it gives no defined emission limits (except in case of complaint).

This document does not specify any safety requirements for the equipment such as protection against electric shocks, insulation co-ordination and related dielectric tests, unsafe operation, or unsafe consequences of a failure. It also does not cover safety and functional safety implications of electromagnetic phenomena.

In special cases, when highly susceptible apparatus is being used in proximity, additional mitigation measures ~~may~~ can have to be employed to reduce the electromagnetic emission further below the specified levels or additional countermeasures ~~may~~ can have to be employed to increase the immunity of the highly susceptible apparatus.

As an EMC product standard for PDSs, this document takes precedence over all aspects of the generic standards, and no additional EMC tests are ~~required or necessary~~ performed. If a PDS is included as part of equipment covered by a separate EMC product standard, the EMC standard of the complete equipment applies.

2 Normative references

The following documents are referred to in the text in such a way that some or all of their content constitutes requirements of this document. For dated references, only the edition cited applies. For undated references, the latest edition of the referenced document (including any amendments) applies.

~~IEC 60050-(131):2002, *International Electrotechnical Vocabulary (IEV) – Chapter 131: Circuit theory*~~

~~IEC 60050-(151):2001, *International Electrotechnical Vocabulary (IEV) – Chapter 151: Electrical and magnetic devices*~~

~~IEC 60050-(161):1990, *International Electrotechnical Vocabulary (IEV) – Chapter 161: Electromagnetic compatibility*~~

IEC 60146-1-1:~~1991~~ 2009, *Semiconductor convertors – General requirements and line commutated convertors – Part 1-1: Specifications of basic requirements*

~~IEC 60364-1:2001, *Electrical installations of buildings – Part 1: Fundamental principles, assessment of general characteristics, definitions*~~

~~IEC 60664-1:1992, *Insulation co-ordination for equipment within low-voltage systems – Part 1: Principles, requirements and tests*~~

AVA Documents Document Sharing Hub

Full document details: IEC 61800-3 2017 RLV

~~IEC 61000-1-1, *Electromagnetic compatibility (EMC) – Part 1: General – Section 1: Application and interpretation of fundamental definitions and terms*~~

~~IEC 61000-2-1:1990, *Electromagnetic compatibility (EMC) – Part 2: Environment – Section 1: Description of the environment – Electromagnetic environment for low-frequency conducted disturbances and signalling in public power supply systems*~~

IEC 61000-2-2:2002, *Electromagnetic compatibility (EMC) – Part 2-2: Environment – Compatibility levels for low-frequency conducted disturbances and signalling in public low-voltage power supply systems*

IEC 61000-2-4:~~2003~~ 2002, *Electromagnetic compatibility (EMC) – Part 2-4: Environment – Compatibility levels in industrial plants for low-frequency conducted disturbances*

~~IEC 61000-2-6:1995, *Electromagnetic compatibility (EMC) – Part 2: Environment – Section 6: Assessment of the emission levels in the power supply of industrial plants as regards low-frequency conducted disturbances*~~

IEC 61000-3-2:~~2000~~ 2014, *Electromagnetic compatibility (EMC) – Part 3-2: Limits – Limits for harmonic current emissions (equipment input current ≤ 16 A per phase)*

IEC 61000-3-3:~~1994~~ 2013, *Electromagnetic compatibility (EMC) – Part 3-3: Limits – Limitation of voltage changes, voltage fluctuations and flicker in public low-voltage supply systems, for equipment with rated current ≤ 16 A per phase and not subject to conditional connection*

~~IEC 61000-3-4:1998, *Electromagnetic compatibility (EMC) – Part 3: Limits – Section 4: Limitation of emission of harmonic currents in low-voltage power supply systems for equipment with rated current greater than 16 A*~~

~~IEC 61000-3-7:1996, *Electromagnetic compatibility (EMC) – Part 3: Limits – Section 7: Limits for fluctuating loads in MV and HV power systems – Basic EMC publication*~~

IEC 61000-3-11:2000, *Electromagnetic compatibility (EMC) – Part 3-11: Limits – Limitation of voltage changes, voltage fluctuations and flicker in public low-voltage supply systems – Equipment with rated current ≤ 75 A and subject to conditional connection*

IEC 61000-3-12: 2011, *Electromagnetic compatibility (EMC) – Part 3-12: Limits – Limits for harmonic currents produced by equipment connected to public low-voltage systems with input current > 16 A and ≤ 75 A per phase*

IEC 61000-4-2:2008, *Electromagnetic compatibility (EMC) – Part 4-2: Testing and measurement techniques – Electrostatic discharge immunity test*~~ Basic EMC publication~~

IEC 61000-4-3:~~2002~~ 2006, *Electromagnetic compatibility (EMC) – Part 4-3: Testing and measurement techniques – Radiated, radio-frequency, electromagnetic field immunity test* ~~Basic EMC publication~~

IEC 61000-4-4:~~1995~~ 2012, *Electromagnetic compatibility (EMC) – Part 4-4: Testing and measurement techniques – Electrical fast transient/burst immunity test*~~ Basic EMC publication~~
~~Amendment 1 (2000)~~
~~Amendment 2 (2001)~~

IEC 61000-4-5:~~1995~~ 2014, *Electromagnetic compatibility (EMC) – Part 4-5: Testing and measurement techniques – Surge immunity test*

Documents
Document Sharing Hub
Full document details: IEC 61800-3 2017 RLV

IEC 61000-4-6:~~2003~~ 2013, *Electromagnetic compatibility (EMC) – Part 4-6: Testing and measurement techniques – Immunity to conducted disturbances, induced by radio-frequency fields*

IEC 61000-4-8:~~2001~~ 2009, *Electromagnetic compatibility (EMC) – Part 4-8: Testing and measurement techniques – Power frequency magnetic field immunity test*~~ – Basic EMC publication~~

IEC 61000-4-11:2004, *Electromagnetic compatibility (EMC) – Part 4-11: Testing and measurement techniques – Voltage dips, short interruptions and voltage variations immunity tests*

IEC 61000-4-13:2002, *Electromagnetic compatibility (EMC) – Part 4-13: Testing and measurement techniques – Harmonics and interharmonics including mains signalling at a.c. power port, low frequency immunity tests*

IEC 61000-4-34:2005, *Electromagnetic compatibility (EMC) – Part 4-34: Testing and measurement techniques – Voltage dips, short interruptions and voltage variations immunity tests for equipment with input current more than 16 A per phase*

~~IEC 61800-1:1997, *Adjustable speed electrical power drive systems – Part 1: Rating specifications for low voltage d.c. power drive systems*~~

~~IEC 61800-2:1998, *Adjustable speed electrical power drive systems – Part 2: General requirements – Rating specifications for low voltage adjustable frequency a.c. power drive systems*~~

~~IEC 61800-4:2002, *Adjustable speed electrical power drive systems – Part 4: General requirements – Rating specifications for a.c. power drive systems above 1000 V and not exceeding 35 kV*~~

CISPR 11:~~2003~~ 2015, *Industrial, scientific and medical*~~ *(ISM) radio-frequency*~~ *equipment –* ~~*Electromagnetic*~~ *Radio-frequency disturbance characteristics – Limits and methods of measurement*
CISPR 11:2015/AMD1:2016

~~CISPR 14, *Electromagnetic compatibility – Requirements for household appliances, electric tools and similar apparatus*~~

~~CISPR 16-1:2002, *Specification for radio disturbance and immunity measuring apparatus and methods – Part 1: Radio disturbance and immunity measuring apparatus*~~

CISPR 16-1-2:2014, *Specification for radio disturbance and immunity measuring apparatus and methods – Part 1-2: Radio disturbance and immunity measuring apparatus – Coupling devices for conducted disturbance measurements*

CISPR 16-1-4:2010, *Specification for radio disturbance and immunity measuring apparatus and methods – Part 1-4: Radio disturbance and immunity measuring apparatus – Antennas and test sites for radiated disturbance measurements*

CISPR 22~~:2003~~, *Information technology equipment – Radio disturbance characteristics – Limits and methods of measurement*

CISPR 32:2015, *Electromagnetic compatibility of multimedia equipment – Emission requirements*

AVA Documents
Document Sharing Hub

Full document details: IEC 61800-3 2017 RLV

3 Terms and definitions

~~3.1 Overview~~

For the purposes of this document, ~~definitions related to EMC and to relevant phenomena to be found in IEC 60050(161), in CISPR, and also,~~ the following ~~additional~~ terms and definitions apply.

~~A power drive system (PDS) consists of a motor and a complete drive module (CDM). It does not include the equipment driven by the motor. The CDM consists of a basic drive module (BDM) and its possible extensions such as the feeding section or some auxiliaries (e.g. ventilation). The BDM contains converter, control and self-protection functions. Figure 1 shows the boundary between the PDS and the rest of the installation and/or manufacturing process. IEC 61800-1, IEC 61800-2 and IEC 61800-4 give details for these definitions.~~

ISO and IEC maintain terminological databases for use in standardization at the following addresses:

- IEC Electropedia: available at http://www.electropedia.org/
- ISO Online browsing platform: available at http://www.iso.org/obp

3.1 Installation and its content

Figure 1 shows the major parts of the PDS as defined below and the rest of the installation.

Documents
Document Sharing Hub

Full document details: IEC 61800-3 2017 RLV

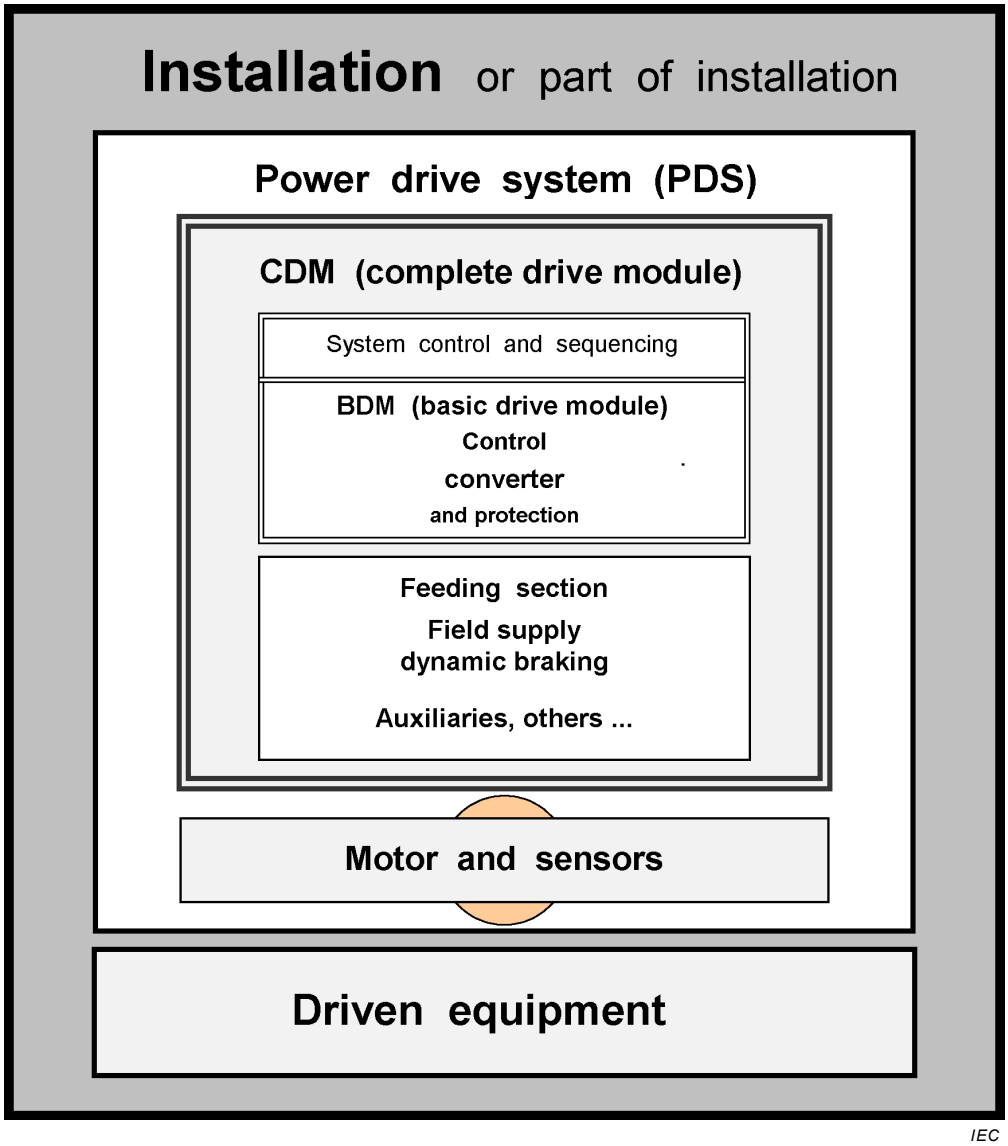

Figure 1 – ~~Definition of the~~ Installation and its content

~~If the PDS has its own dedicated transformer, this transformer is included as a part of the CDM.~~

3.1.1
basic drive module
BDM
electronic power converter and related control, connected between an electric supply and a motor

Note 1 to entry: The BDM is capable of transmitting power from the electric supply to the motor and can be capable of transmitting power from the motor to the electric supply. The BDM controls some or all of the following aspects of power transmitted to the motor and motor output:

- current;
- frequency;
- voltage;
- speed;
- torque;
- force;

Documents
Document Sharing Hub
Full document details: IEC 61800-3 2017 RLV

- position.

3.1.2
complete drive module
CDM
drive module consisting of, but not limited to, the BDM and extensions such as protection devices, transformers and auxiliaries

Note 1 to entry: The motor and the sensors which are mechanically coupled to the motor shaft are not included.

3.1.3
power drive system
PDS
system consisting of one or more complete drive module(s) (CDM) and a motor or motors

Note 1 to entry: Any sensors which are mechanically coupled to the motor shaft are also part of the PDS; however, the driven equipment is not included.

3.1.4
installation
equipment or equipments which include at least both the PDS and the driven equipment

3.1.5
small size equipment
equipment, either positioned on a table top, wall-mounted or standing on the floor which, including its cables and possible auxiliary equipment, fits in an imaginary cylindrical test volume of maximum 1,2 m in diameter and 1,5 m height (to ground plane)

Note 1 to entry: This definition has been modified to apply to measurement of radiated emissions from the enclosure port.

[SOURCE: CISPR 11:2015, 3.17, modified — The expression "wall-mounted" and "and possible auxiliary equipment" have been added, as well as the note to entry.]

3.1.6
wall-mounted equipment
CDM/BDM intended to be mounted on a vertical surface

3.2 Intended use

3.2.1
EMC plan
procedure for the EMC assessment when installing category C4 (see 3.2.7) equipment

3.2.2
first environment
environment that includes ~~domestic~~ residential premises and establishments directly connected without intermediate transformers to a low-voltage power supply network which supplies buildings used for ~~domestic~~ residential purposes

Note 1 to entry: Houses, apartments, commercial premises or offices in a residential building are examples of first environment locations.

3.2.3
second environment
environment that includes all establishments other than those directly connected to a low-voltage power supply network which supplies buildings used for ~~domestic~~ residential purposes

Note 1 to entry: Industrial areas or technical areas of any building fed from a dedicated transformer are examples of second environment locations.

AVA Documents
Document Sharing Hub
Full document details: IEC 61800-3 2017 RLV

3.2.4
PDS of category C1
PDS of rated voltage less than 1 000 V, intended for use in the first environment

3.2.5
PDS of category C2
PDS of rated voltage less than 1 000 V, which is neither a plug in device nor a movable device and, when used in the first environment, is intended to be installed and commissioned only by a professional

Note 1 to entry: A professional is a person or an organisation having necessary skills in installing and/or commissioning power drive systems, including their EMC aspects.

3.2.6
PDS of category C3
PDS of rated voltage less than 1 000 V, intended for use in the second environment and not intended for use in the first environment

3.2.7
PDS of category C4
PDS of rated voltage equal to or above 1 000 V, or rated current equal to or above 400 A, or intended for use in complex systems in the second environment

3.3 Location, ports and interfaces

3.3.1
in situ
<test> location where the equipment is installed for its normal use by the end user

3.3.2
test site
<radiation> site meeting requirements necessary for correctly measuring, under defined conditions, electromagnetic fields emitted by a device under test

[SOURCE: IEC 60050-161:1990, 161-04-28]

3.3.3
port
access to a device or network where electromagnetic energy or signals may be supplied or received or where the device or network variables may be observed or measured

Note 1 to entry: Figure 2 illustrates the diversity of the ports of a PDS.

[SOURCE: IEC 60050-131:2002, 131-12-60, modified – The note to entry has been replaced by a new one.]

3.3.4
enclosure port
physical boundary of the PDS through which electromagnetic fields may radiate or impinge

Note 1 to entry: See Figure 2.

3.3.5
port for process measurement and control
input/output (I/O) port for a conductor or cable which connects the process to the PDS ~~as defined in Clause 3 (see Figure 2)~~

Documents
Document Sharing Hub
Full document details: IEC 61800-3 2017 RLV

3.3.6
power port
port which connects the PDS to the power supply, which also feeds other equipment

3.3.7
main power port
power port which feeds the PDS for only the power which, after electrical power conversion, is converted by the motor into mechanical power

3.3.8
auxiliary power port
power port which feeds only the auxiliaries of the PDS, including the field circuit, if any

~~**3.3.9**~~
~~**mechanical link**~~
~~mechanical connection between the shaft of the motor of the PDS and the driven equipment of the process as defined in Clause 3~~

3.3.9
signal interface
input/output (I/O) connection for a line connecting the basic drive module or complete drive module (BDM/CDM) to another part of the PDS

Note 1 to entry: See Figure 2.

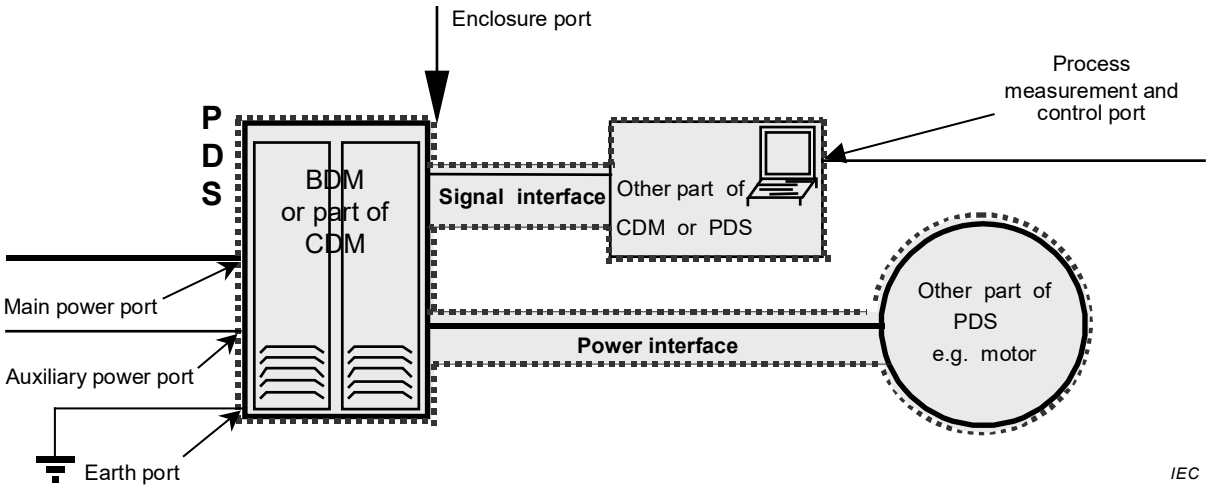

Figure 2 – Internal interfaces of the PDS and examples of ports

3.3.10
power interface
connections needed for the distribution of electrical power ~~within the PDS~~

Note 1 to entry: See Figure 3 for an example of power interface and Clause E.1 for an explanation.

Note 2 to entry: The power interfaces of the PDS may have different forms and extensions:

– Within the CDM/BDM

A power interface ~~may~~ can be the connection for distribution of electrical power from one part of the BDM/CDM to another part of the BDM/CDM. One power interface ~~may~~ can be common to different components of the PDS. For examples, see Figure 3 and Figure 4.

Figure 3 shows a power interface which distributes power from an input converter (where power is converted from the mains to another type, here DC power) to output inverters (where power is converted from an intermediate form (here DC) to another type (here AC) which can be directly applied to AC motors).

Figure 4 shows a power interface which distributes power from the secondary of a transformer (which is part of the CDM) to individual BDMs.

AVA Documents Document Sharing Hub
Full document details: IEC 61800-3 2017 RLV

– Within the PDS

Note that the connection between the inverter and the motor or the motors is also a power interface. It is the last power interface before the conversion to mechanical power.

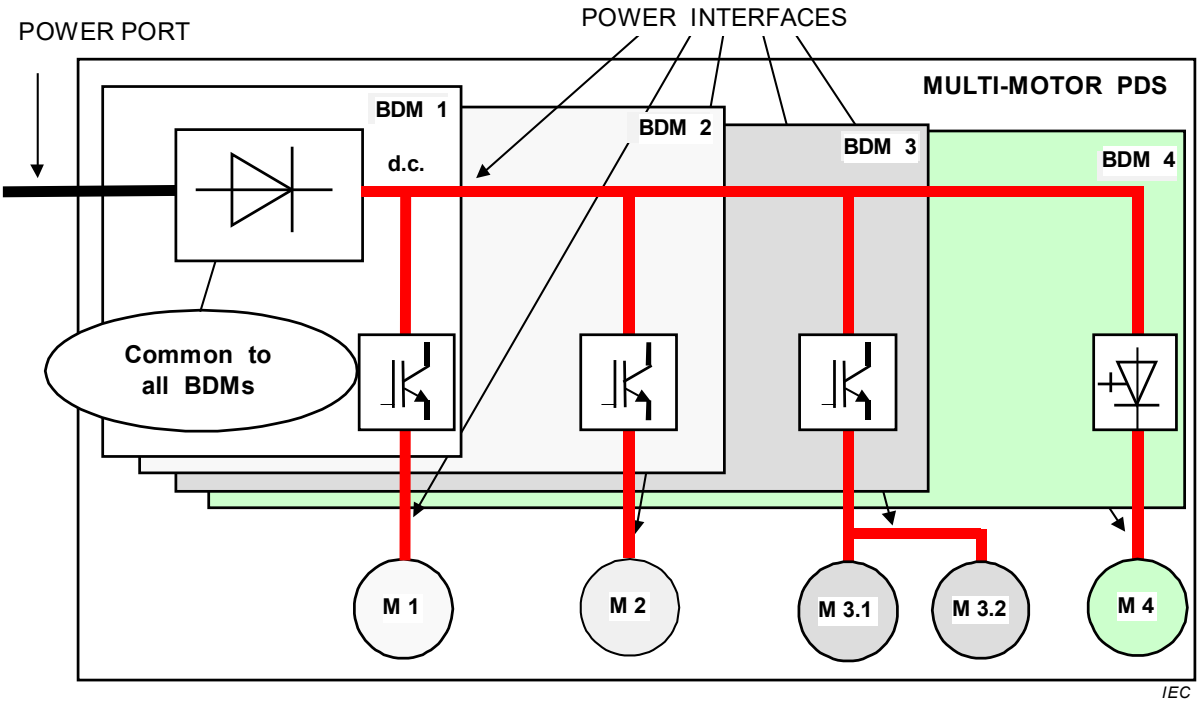

Figure 3 – Power interfaces of a PDS with common DC BUS

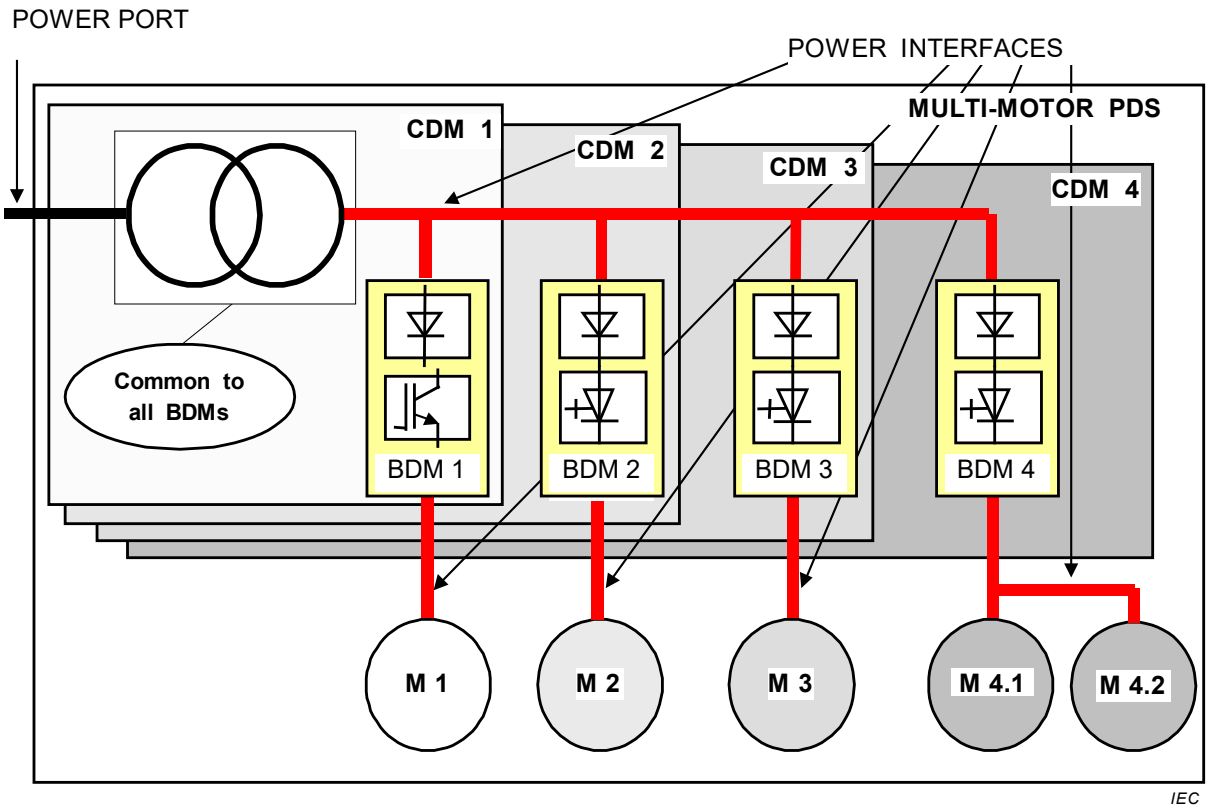

Figure 4 – Power interfaces with common input transformer

Documents
Document Sharing Hub
Full document details: IEC 61800-3 2017 RLV

~~**3.3.12**~~
~~**PCC, IPC, PC**~~
~~these definitions are given in IEC 61000-2-4~~

~~NOTE Briefly:~~

~~– PCC is the point of common coupling on a public network;~~

~~– IPC is the in-plant point of coupling;~~

~~– PC is the point of coupling (for either of these cases).~~

3.3.11
point of common coupling
PCC
point on a public power supply network, electrically nearest to a particular load, at which other loads are, or could be, connected

[SOURCE: IEC 61000-2-4:2002, 3.1.6]

3.3.12
in-plant point of coupling
IPC
point on a network inside a system or an installation, electrically nearest to a particular load, at which other loads are, or could be, connected

Note 1 to entry: The IPC is usually the point for which electromagnetic compatibility is to be considered.

[SOURCE: IEC 61000-2-4:2002, 3.1.7]

3.3.13
point of coupling
PC
point on a network which can be a public power supply network or a network inside a system or an installation

3.4 Components of the PDS

3.4.1
converter
<of the BDM> unit which changes the form of electrical power supplied by the mains to the form fed to the motor(s) by changing one or more of the voltage, current and/or frequency

Note 1 to entry: The converter comprises electronic commutating devices and their associated commutation circuits. It is controlled by transistors or thyristors or any other power switching semiconductor devices.

Note 2 to entry: The converter can be line-commutated, load-commutated or self-commutated and can consist, for example, of one or more rectifiers or inverters.

3.4.2
motor
electric motor
electric machine intended to transform electric energy into mechanical energy

Note 1 to entry: For the purposes of this document, the motor includes all sensors which are mounted on it and which are relevant for supporting the operating mode and interacting with a CDM.

[SOURCE: IEC 60050:2001, 151-13-41, modified — The note has been added.]

Documents
Document Sharing Hub
Full document details: IEC 61800-3 2017 RLV

~~3.4.3~~
~~**motor (of the PDS)**~~
~~for the purposes of this standard, the motor includes all sensors which are mounted on it and which are relevant for supporting the operating mode and interacting with a CDM~~

3.4.3
sub-component ~~(of the PDS)~~
~~for the purposes of this standard, a component of the PDS may be divided in sub-components, each of them being a~~ physical piece of equipment which can be operated separately with an intrinsic function defined by the manufacturer

Note 1 to entry: For the purpose of this document, a component of the PDS can be divided into sub-components.

Note 2 to entry: As an example, the control unit of a CDM may be a sub-component.

3.5 Phenomena-related definitions

3.5.1
electromagnetic compatibility
EMC
ability of an equipment or system to function satisfactorily in its electromagnetic environment without introducing intolerable electromagnetic disturbances to anything in that environment

[SOURCE: IEC 60050-161:1990, 161-01-07]

3.5.2
total harmonic current
THC
total RMS value of the harmonic current components of orders 2 to 40

$$THC = \sqrt{\sum_{h=2}^{40} I_h^2}$$

[SOURCE: IEC 61000-3-12:2011, 3.1]

3.5.3
total harmonic distortion
THD
ratio of the RMS value of the harmonic content to the RMS value of the fundamental component or the reference fundamental component of an alternating quantity

Note 1 to entry: The harmonic content depends on the choice of the fundamental component. If it is not clear from the context which one is used, an indication should be given.

Note 2 to entry: The total harmonic distortion can be restricted to a certain harmonic order (recommended notation "H"), which is 40 for the purpose of this document.

$$THD = \sqrt{\sum_{h=2}^{h=H} \left(\frac{Q_h}{Q_1} \right)^2}$$

where, in addition to the notes to entry of B.2.2.7,

Q_1 is the RMS value of the fundamental component.

[SOURCE: IEC 60050-551:2001, 551-20-13, modified — The term "total harmonic ratio" has been deleted, the formula has been added and Note 1 to entry has been rephrased. In Note 2 to entry, the sentence "This is to be stated" has been deleted and the part "(recommended notation "H"), which is 40 for the purpose of this document" has been added.]

Documents
Document Sharing Hub
Full document details: IEC 61800-3 2017 RLV

3.5.4
voltage deviation
difference between the voltage at a given instant and the declared supply voltage

[SOURCE: IEC 60050-614:2016, 614-01-04]

3.5.5
voltage change
variation of the RMS or peak value of a voltage between two consecutive levels sustained for definite but unspecified durations

Note 1 to entry: Whether the RMS or peak value is chosen depends upon the application, and which is used should be specified.

[SOURCE: IEC 60050-161:1990, 161-08-01]

3.5.6
voltage fluctuation
series of voltage changes or a continuous variation of the RMS or peak value of the voltage

Note 1 to entry: Whether the RMS or peak value is chosen depends upon the application, and which is used should be specified.

[SOURCE: IEC 60050-161:1990, 161-08-05]

3.5.7
voltage dip
sudden reduction of the voltage at a point in an electrical system, followed by voltage recovery after a short period of time, from a few cycles to a few seconds

[SOURCE: IEC 60050-614:2016, 614-01-08, modified — The second preferred term "voltage sag" has been deleted. In the definition, the words "electric power system" has been replaced by "electrical system", and the words "from a few periods of the sinusoidal wave of the voltage to a few seconds" by "from a few cycles to a few seconds".]

4 Common requirements

4.1 General conditions

All phenomena, from the emission or immunity point of view, shall be considered individually. The limits are given for conditions which do not consider the cumulative effects of different phenomena.

For a realistic assessment of the EMC situation, a typical configuration shall be chosen.

The application of tests for evaluation of immunity depends on the particular PDS, its configuration, its ports, its technology and its operating conditions (see annexes).

4.2 Tests

4.2.1 Conditions

IEC 60146-1-1 and IEC 61800-2 distinguish between type test, routine test and special test. Unless otherwise stated, all the tests specified in this document are type tests only. The equipment shall meet the EMC requirements under all normal operating conditions as stated in the operating manual of the equipment when measured by the test methods specified in this document.

Documents
Document Sharing Hub
Full document details: IEC 61800-3 2017 RLV

NOTE 1 Due to local radio transmission legislation, some immunity tests can be subject to conditions which restrict the choice of location where they can be performed.

If necessary, safeguards shall be taken against any unintended effects on the total process that may result from an equipment failure while an EMC test is being conducted.

For the tests, ~~unless otherwise specified by the manufacturer,~~ the CDM shall be connected to a ~~standard~~ motor ~~of adequate ratings~~ recommended by the manufacturer with a cable and earthing rules defined by the manufacturer. ~~In some cases~~ Alternatively, a passive test load ~~conditions~~ (resistive, or resistive and inductive) may ~~additionally~~ be applied (for example, for evaluation of the low-frequency emissions), if permitted by the manufacturer.

NOTE 2 For high frequency emissions, passive test load can be unsuitable to simulate differential and common mode capacitances and couplings typically present.

The description of the tests, the test methods, the characteristics of the tests and the test set-ups are given in the referred standards and are not repeated here. If, however, modifications or additional requirements and information or specific test methods are needed for practical implementation and application of the tests, then they are given in this document.

A sufficient number of terminals shall be selected to simulate actual operating conditions and to ensure that all relevant types of termination are covered. The tests shall be carried out at the rated supply voltage and in a reproducible manner.

4.2.2 Test report

The test results shall be documented in a test report. The report shall clearly and unambiguously present all relevant information ~~of the tests (for example: load conditions, cable laying, etc.)~~ for reproducible testing. A functional description and detailed acceptance criteria provided by the manufacturer shall be noted in the test report.

Within the test report, the chosen test arrangements shall be justified. ~~A sufficient number of terminals shall be selected to simulate actual operating conditions and to ensure that all relevant types of termination are covered. The tests shall be carried out at the rated supply voltage and in a reproducible manner.~~ Whenever a subclause of this document offers alternative test methods, the chosen test method shall be stated in the test report. The information on test methods showed in Table 1 shall be given:

Documents
Document Sharing Hub
Full document details: IEC 61800-3 2017 RLV

Table 1 – Subclauses containing alternative test methods

Subclause	Test methods
5.1.2	Type of test: – general system performance test; or – special system performance test; or – sub-component performance test.
5.2 and sub-clauses	Immunity verification by: – calculation; or – simulation; or – test.
5.3.2	Fast transient burst for equipment ≥ 100 A: – direct coupling; or – capacitive clamp.
5.3.3	Fast transient burst for equipment ≥ 100 A: – direct coupling; or – capacitive clamp.
5.3.4	Immunity against electromagnetic fields: – PDS test; or – sub-components test.
6.2.1	Emission verification by: – calculation; or – simulation; or – test.
6.3.1.1	Test on a test site or in situ
6.3.1.2	Conducted emission tests: – with CISPR artificial mains network; or – with high impedance voltage probe.
6.3.1.3.3	Radiated emissions: measurement distance

4.3 Documentation for the user

The setting of limits and the structure of this document are based on the understanding that the installer and user are responsible for following the EMC recommendations of the manufacturer.

The manufacturer shall supply the documentation necessary for the ~~installer~~ correct installation of a BDM, CDM or ~~for the user of a~~ PDS ~~for the correct installation~~ into a typical system or process in the intended environment. This information includes any emission warnings required by 6.1 and Table 15. It also includes the warnings required by 5.3.2 in the case where the immunity of a BDM, CDM or PDS is not suitable for the second environment.

NOTE 1 From the emission point of view, a PDS (or BDM or CDM) with a lower emission category, such as C1, can always be used instead of one with a higher emission category, such as C3.

NOTE 2 Emission categories are independent of immunity. For example, a statement that a PDS has emission category C1 does not imply that the immunity is only suitable for the first environment.

If special EMC measures are necessary to fulfil the required limits, these shall be clearly stated in the user documentation. Where relevant, these can include the following:

- maximum and minimum acceptable supply network impedance;
- the use of shielded or special cables (power and/or control);
- cable shield connection requirements;

AVA Documents Document Sharing Hub

Full document details: IEC 61800-3 2017 RLV

- maximum permissible cable length;
- cable segregation;
- the use of external devices such as filters;
- the correct bonding to functional earth.

If different devices or connection requirements apply in different environments, this shall also be stated.

A list of auxiliary equipment (for example, options or enhancements) that can be added to the PDS, and which complies with the immunity and/or emission requirements shall be made available.

This information may also be covered in some part of the test report to clarify the final recommended arrangement.

5 Immunity requirements

5.1 General conditions

5.1.1 Acceptance criteria (performance criteria)

The system performance relates to the functions of the BDM, or of the CDM, or of the PDS as a whole that are declared by the manufacturer.

The sub-component performance relates to the functions of the sub-components of the BDM, or of the CDM, or of the PDS that are declared by the manufacturer.

The sub-component performance may be tested as an alternative instead of the system performance to show immunity (see 5.1.2). In the test report, it shall be stated which test has been applied.

Although this document allows tests on sub-components (components of CDM/BDM), it is not intended to be used for the separate conformity assessment of sub-components.

The acceptance criteria shall be used to check the performance of a PDS against external disturbances. From the EMC point of view, any installation according to Figure 1 shall be running properly. Since a PDS is part of the functional sequence of a larger process than the PDS itself, the effect on this process caused by changes in the performance of the PDS is hard to forecast. However, this important aspect for large systems should be covered by an EMC plan (see Annex E).

The main functions of a PDS are energy conversion between the electrical form and the mechanical form, and the information processing necessary to perform this.

Table 2 classifies the effects of a given disturbance into three acceptance (performance) criteria: A, B and C, both for the PDS and for its sub-components.

Subclauses 5.2 and 5.3 state the acceptance criterion required for each phenomenon.

5.1.2 Selection of performance type

5.1.2.1 General or special system performance

The “general system performance” item from Table 2 shall be defined in accordance with the special application and typical configuration of the PDS. It is the responsibility of the manufacturer to select these items.

Documents
Document Sharing Hub
Full document details: IEC 61800-3 2017 RLV

The special system performance, torque-generating behaviour, shall be tested only in cases where it is explicitly defined in the product specification. In this case, the torque generating performance can be directly or indirectly tested. The direct test uses an EMC immune torquemeter to measure torque disturbances.

Torque performance can be defined through the ability to keep current or speed constant, within specified tolerances, when a disturbance is applied (see also 5.1.3). Therefore, a test of current performance can be used as an indirect test of torque-generating performance. For EMC assessment, and unless otherwise agreed, the output current of the power converter is deemed to represent torque with sufficient accuracy. As an alternative, the indirect test can use speed performance provided the total inertia is specified.

5.1.2.2 Sub-component performance

Testing of sub-components with sub-component performance should be used in cases when a PDS cannot be put into service on a test site because of limitation on the physical size of the PDS, on the current or rated supply capability or load conditions. In any case, the test set-up shall be immune to the highest level of disturbance applied to the PDS or to the sub-component under test.

Testing of information processing and sensing functions, including optional accessories if any, shall be performed only in cases where the relevant ports or interfaces are available at the PDS. Testing of the sub-component performance, according to Table 2, where the functions exist, is sufficient to determine the compliance with this document.

Documents
Document Sharing Hub

Full document details: IEC 61800-3 2017 RLV

Table 2 – Criteria to prove the acceptance of a PDS against electromagnetic disturbances

Item	Acceptance (performance) criterion [a]		
	A	B	C
General system performance	No noticeable changes of the operating characteristic Operating as intended, within specified tolerance	Noticeable changes (visible or audible) of the operating characteristic Self-recoverable	Shutdown, changes in operating characteristics Triggering of protective devices [b] Not self-recoverable
Special system performance Torque generating behaviour	Torque deviation within specified tolerances	Temporary torque deviation outside specified tolerances Self-recoverable	Loss of torque Not self-recoverable
Sub-component performance Operation of power electronics and driving circuits	No malfunction of a power semiconductor	Temporary malfunction which cannot cause unintended shut-down of the PDS	Shut-down, triggering of protective devices [b] No loss of stored program No loss of user program No loss of settings Not self-recoverable
Sub-component performance Information processing and sensing functions	Undisturbed communication and data exchange to external devices	Temporarily disturbed communication, but no error reports of the internal or external devices which could cause shut-down	Errors in communication, loss of data and information No loss of stored program, no loss of user program No loss of settings. Not self-recoverable
Sub-component performance Operation of displays and control panels	No changes of visible display information, only slight light intensity fluctuation of LEDs, or slight movement of characters	Visible temporary changes of information, undesired LED illumination	Shut down, permanent loss of information, or unpermitted operating mode, obviously wrong display information No loss of stored program, no loss of user program No loss of settings

[a] Acceptance criteria A, B, C – False starts are not acceptable. A false start is an unintended change from the logical state "STOPPED" which can make the motor run.

[b] Acceptance criterion C – The function can be restored by operator intervention (manual reset). Opening of fuses is allowed for line-commutated converters operating in inverting mode.

5.1.3 Conditions during the test

The load shall be within the manufacturer's specification and the actual load shall be noted in the test report.

Testing the torque generating behaviour as well as the information processing and sensing functions requires special test equipment with adapted immunity against the parasitic coupling of the test disturbance. It can only be used if the immunity of the test set-up can be proven by reference measurements. The evaluation of the torque disturbance can be performed by a torque transducer or by measurement or calculation of the torque generating current or other indirect techniques; an adapted and immune load shall be available at the test-site.

For testing the performance of the information processing or sensing function, suitable equipment shall be available to simulate the data communication or data evaluation. This equipment shall have sufficient immunity to operate correctly during the test.

Documents
Document Sharing Hub
Full document details: IEC 61800-3 2017 RLV

Since the motor has been tested by its manufacturer according to the relevant standards, the motor component of the PDS, with exception of the sensors, does not need any additional EMC immunity test. Therefore, while the motor is connected to the BDM/CDM for the duration of the test, EMC immunity tests on the motor itself are not required.

The tests shall be applied to the relevant ports where they exist, including those of optional accessories if any. They shall be conducted in a well-defined and reproducible manner on a port-by-port basis. However, if several process measurement and control ports or signal interfaces have the same physical configuration (layout) it is sufficient to test one port or interface of that type.

In 5.2 and 5.3 the minimum requirements, tests and acceptance criteria are stated. The acceptance criteria refer to 5.1.1.

5.2 Basic immunity requirements – low-frequency disturbances

5.2.1 Common principle

The requirements in this subclause shall be used for designing the immunity of a PDS against low-frequency disturbances.

For the immunity requirements, the manufacturer may demonstrate compliance using either testing, calculation or simulation, and shall state the chosen verification method in the test report. Unless otherwise stated, it is sufficient to demonstrate that the power circuit will comply with the required acceptance criterion and that the ratings of input circuits (filters, etc.) will not be exceeded.

NOTE 1 A number of these phenomena are not required by the generic standards, but are important for the dimensioning of the power circuit of the PDS. It is difficult to test immunity against many of these phenomena, particularly when the input current exceeds 16 A or the supply voltage exceeds 400 V. However, experience of many years shows that, provided the power circuit operates correctly, the control part and the auxiliaries are generally immune. This is due to natural decoupling that exists in the PDS. Examples of such decoupling are that provided by power supplies and the time constants of auxiliary processes such as fans.

The compliance with the requirements of this document shall be stated in the user documentation. Where compliance is demonstrated by tests, the relevant basic standards in the IEC 61000-4 series may be considered (see Clause B.7).

NOTE 2 The electrical service conditions for the main and the auxiliary supply if any, are already defined in the PDS service conditions in the relevant standard IEC 61800-1 or IEC 61800-2 or IEC 61800-4. These service conditions include frequency variations, frequency rate of change, voltage variations, voltage fluctuations, voltage unbalance, harmonics and commutation notches.

~~NOTE 3 Possible consequences of exceeding the indicated levels (in accordance with IEC 60146-2) are:~~

~~F Functional with degradation of performance;~~

~~T Tripping or interruption of operation due to protective devices;~~

~~D Permanent damage (fuses acceptable).~~

~~Such consequences should not be regarded as an EMC concern, but as part of a safety analysis when relevant.~~

5.2.2 Harmonics and commutation notches/voltage distortion

5.2.2.1 Low voltage PDSs (voltage distortion)

The BDM, CDM or PDS shall sustain the immunity levels while meeting the performance criteria given in Table 3, Table 4 and Table 5. It shall be verified that these levels will not cause the ratings for the input circuits (filters, etc.) to be exceeded. Analysis of commutation notches shall be in the time domain. The manufacturer may verify immunity by calculation, simulation, or test, according to 5.2.1, and shall state the chosen verification method in the test report. If the chosen verification method is by test, it shall be performed using the PDS with the motor connected. For equipment rated below 16 A per phase, the test method of IEC 61000-4-13 can be applied.

AVA Documents Document Sharing Hub

Full document details: IEC 61800-3 2017 RLV

NOTE Frequency domain analysis of the contribution from notches to the total harmonic distortion will not ~~obviously reveal certain types of~~ fully account for harmful effects (see Clause B.1).

~~**Table 2 – Minimum immunity requirements for harmonics and commutation notches/voltage distortion on power ports of low voltage PDSs**~~

~~Phenomenon~~	~~First environment~~		~~Second environment~~		~~Performance (acceptance) criterion~~
	~~Reference document~~	~~Level~~	~~Reference document~~	~~Level~~	
~~Harmonics (*THD* and individual harmonic orders)~~	~~IEC 61000-2-2~~	~~Value of the compatibility level~~	~~IEC 61000-2-4 Class 3~~	~~Value of the compatibility level~~	~~A~~
~~Harmonics short term (< 15 s)~~	~~IEC 61000-2-2~~	~~1,5 times the value of the permanent compatibility levels~~	~~IEC 61000-2-4 Class 3~~	~~1,5 times the value of the permanent compatibility levels~~	~~B~~
~~Commutation notches~~	~~IEC 61000-1-1~~	~~No requirement~~	~~IEC 60146-1-1 Class B~~	~~Depth = 40 %, Total area = 250 in per cent degrees~~	~~A~~

Table 3 – Minimum immunity requirements for total harmonic distortion on power ports of low voltage PDSs

Phenomenon	First environment		Second environment		Performance (acceptance) criterion
	Reference document	Level	Reference document	Level	
Harmonics – THD	IEC 61000-2-2	8 %	IEC 61000-2-4 class 3	12 %	A

Table 4 – Minimum immunity requirements for individual harmonic orders on power ports of low voltage PDSs

Phenomenon Harmonic order	First environment		Second environment		Performance (acceptance) criterion
	Reference document	Level	Reference document	Level	
2	IEC 61000-4-13 class 2	3 %	IEC 61000-4-13 class 3	5 %	A
3		8 %		9 %	
4		1,5 %		2 %	
5		9 %		12 %	
Even orders $6 \leq h \leq 50$		No requirement		1,5 %	
7		7,5 %		10 %	
9		2,5 %		4 %	
11		5 %		7 %	
13		4,5 %		7 %	
15		No requirement		3 %	
17		3 %		6 %	
19		2 %		6 %	
21		No requirement		2 %	
23		2 %		6 %	

AVA Documents Document Sharing Hub

Full document details: IEC 61800-3 2017 RLV

Phenomenon Harmonic order	First environment		Second environment		Performance (acceptance) criterion
	Reference document	Level	Reference document	Level	
25		2 %		6 %	
27		No requirement		2 %	
29		1,5 %		5 %	
31		1,5 %		3 %	
33		No requirement		2 %	
35		1,5 %		3 %	
37		1,5 %		3 %	
39		No requirement		2 %	

NOTE 1 For individual harmonic orders in the first environment, levels are from Class 2 in IEC 61000-4-13 (these are approximately 1,5 times the compatibility levels of IEC 61000-2-4).

NOTE 2 For individual harmonic orders in the second environment, levels are from Class 3 in IEC 61000-4-13 (these are approximately 1,5 times the compatibility levels of IEC 61000-2-4).

Table 5 – Minimum immunity requirements for commutation notches on power ports of low voltage PDSs

Phenomenon	First environment		Second environment		Performance (acceptance) criterion
	Reference document	Level	Reference document	Level	
Commutation notches	(None)	No requirement	IEC 60146-1-1 Class B	Depth = 40 %, total area = 250 in % degrees	A

5.2.2.2 PDSs of rated voltage above 1 000 V (voltage distortion)

5.2.2.2.1 Main power port

The PDS or BDM/CDM shall sustain the immunity levels given in Table 6. It shall be verified that these levels will not cause the ratings for the input circuits (filters, etc.) to be exceeded. Analysis of commutation notches shall be in the time domain. The manufacturer may verify immunity by calculation, simulation, or test, according to 5.2.1, and shall state the chosen verification method in the test report.

NOTE Frequency domain analysis of notches' contribution to total harmonic distortion will not obviously reveal certain types of harmful effects (see Clause B.1).

Documents
Document Sharing Hub
Full document details: IEC 61800-3 2017 RLV

Table 6 – Minimum immunity requirements for harmonics and commutation notches/ voltage distortion on main power ports of PDSs of rated voltage above 1 000 V

Phenomenon	Reference document	Level	Performance (acceptance) criterion
Harmonics (*THD* and individual harmonic orders)	IEC 61000-2-4 Class 3	Value of the compatibility level	A ~~[a]~~
Harmonics short term (< 15 s)	IEC 61000-2-4 Class 2	1,5 times the value of the permanent compatibility levels	A ~~[a]~~
~~Interharmonics steady state~~	~~IEC 61000-2-4 Class 2~~	~~Value of the compatibility level~~	~~A [b]~~
~~Interharmonics short term (< 15 s)~~	~~IEC 61000-2-4 Class 2~~	~~1,5 times the value of the permanent compatibility levels~~	~~B [a]~~
Commutation notches	IEC 60146-1-1	Depth = 40% U_{LWM} (class B) Area [a] = 125 in per cent degrees (class C)	A ~~[a]~~
~~[a] The possible consequence of exceeding the level is T (see note 3 in 5.2.1).~~ ~~[b] The possible consequence of exceeding the level is F (see note 3 in 5.2.1).~~ [a] Class C of IEC 60146-1-1 is appropriate for the primary side of the transformer.			

5.2.2.2.2 Auxiliary power port

The auxiliary power ports of PDSs shall sustain the immunity levels for the second environment given in Table 3, Table 4 and Table 5 while meeting the performance criteria in those tables. It shall be verified that these levels will not cause the ratings for the input circuits (filters, etc.) to be exceeded. Analysis of commutation notches shall be in the time domain. The manufacturer may verify immunity by calculation, simulation, or test, according to 5.2.1, and shall state the chosen verification method in the test report.

NOTE Frequency domain analysis of notches' contribution to total harmonic distortion will not obviously reveal certain types of harmful effects (see Clause B.1).

~~**Table 4 – Minimum immunity requirements for harmonics and commutation notches/voltage distortion on auxiliary low voltage power ports of PDSs**~~

~~Phenomenon~~	~~Reference document~~	~~Level~~	~~Performance (acceptance) criterion~~
~~Harmonics (*THD* and individual harmonic orders)~~	~~IEC 61000-2-4 Class 2~~	~~Value of the compatibility level~~	~~A [a]~~
~~Harmonics short term (<15 s)~~	~~IEC 61000-2-4 Class 2~~	~~1,5 times the permanent compatibility levels~~	~~A [a]~~
~~Commutation notches~~	~~IEC 60146-1-1~~	~~Depth = 40% U_{LWM} Area [b] = 250 in per cent degrees~~	~~A [a]~~
~~[a] The possible consequence of exceeding the level is T (see note 3 in 5.2.1).~~ ~~[b] According to IEC 60146-1-1 class B.~~			

5.2.3 Voltage deviations ~~(variations, changes, fluctuations)~~, dips and short interruptions

5.2.3.1 Low voltage PDSs (voltage deviations)

The PDS or BDM/CDM shall sustain the immunity levels given in Table 7. The manufacturer may verify immunity by calculation, simulation, or test, according to 5.2.1, and shall state the chosen verification method in the test report.

AVA Documents Document Sharing Hub

Table 7 – Minimum immunity requirements for voltage deviations, dips and short interruptions on power ports of low voltage PDSs

Phenomenon	First environment			Second environment			Performance (acceptance) criterion
	Reference document	Level		Reference document	Level		
Voltage deviations (> 60 s)	IEC 61000-2-2	±10 % [a]		IEC 61000-2-4 Class 2	±10 % [a]		A [b]
~~Voltage dips and short interruptions~~	~~IEC 61000-2-1 [c]~~	~~depth 10 % to 100 %~~		~~IEC 61000-2-1 [c]~~	~~Depth 10 % to 100 %~~		~~C [d]~~
Voltage dips [e]	IEC 61000-4-11 Class 2 or IEC 61000-4-34 Class 2 [f]	Volts remaining 0 % 70 %	Cycles 1 25/30 [c]	IEC 61000-4-11 Class 3 or IEC 61000-4-34 Class 3 [f]	Volts remaining 0 % 40 % 70 % 80 %	Cycles 1 10/12 [c] 25/30 [c] 250/300 [c]	C [d]
Short interruptions	IEC 61000-4-11 Class 2 or IEC 61000-4-34 Class 2 [f]	Volts remaining 0 %	Cycles 250/300 [c]	IEC 61000-4-11 Class 3 or IEC 61000-4-34 Class 3 [f]	Volts remaining 0 %	Cycles 250/300 [c]	C [d]

~~[a] If class 3 of IEC 61000-2-4 is required, this should be agreed between the manufacturer and user.~~

[a] "Voltage deviation" is a supply voltage variation from the nominal supply voltage. Testing of voltage deviations for three phase PDS requires increasing or reducing the voltage of all three phases simultaneously.

[b] When the voltage is below nominal, the maximum output power ratings – speed and/or torque – may be reduced, because they are voltage dependent.

~~[c] Typical depths and durations of voltage dips are given in 8.1.2 of IEC 61000-2-1.~~

[c] "x/y cycles" means "x cycles for 50 Hz test" and "y cycles for 60 Hz test".

[d] Opening of fuses is allowed for line-commutated converters operating in inverting mode.

[e] Power ports with current rating ≥75 A: the method of the voltage drop test according to 7.5 of IEC 61400-21:2008 may be used.

[f] IEC 61000-4-11 applies to equipment rated less than or equal to 16 A and IEC 61000-4-34 to equipment rated above 16 A.

~~NOTE 1~~ A PDS is used for energy conversion, and a voltage dip represents a loss of available energy. It ~~may~~ can be necessary to trip for safety reasons, even during a voltage dip of 30 % to 50 % amplitude and 0,3 s duration.

NOTE 1 A decreasing input voltage, even with few milliseconds duration, ~~may~~ can result in blowing of fuses when applied to a line commutated thyristor converter operating under regeneration mode.

NOTE 2 The effect of a voltage dip (energy reduction) on the process cannot be defined without detailed knowledge of the process itself. This effect is a system and rating aspect, and will generally be greatest when the power demand (including losses) on the PDS is higher than the available power.

Where it is possible and not dangerous, the behaviour of the PDS during short interruptions may be verified by switching off and on the mains supply during the standard operating conditions of the PDS (see B.6.1).

The manufacturer shall state in the user documentation the degradation of performance resulting from voltage dips or short interruptions.

AVA Documents
Document Sharing Hub

Full document details: IEC 61800-3 2017 RLV

NOTE 3 Improvements to the immunity (use of UPS, stand-by generator, derating, etc.) ~~may~~ can result in a considerable increase in the size and cost of the PDS and ~~may~~ can reduce the efficiency or power factor. Operation such as automatic restart ~~may~~ can have safety consequences, and are not covered by this document.

5.2.3.2 PDSs of rated voltage above 1 000 V (voltage deviations)

5.2.3.2.1 Main power port

Main power ports of PDSs shall sustain the immunity levels given in Table 8. The manufacturer may verify immunity by calculation, simulation, or test, according to 5.2.1, and shall state the chosen verification method in the test report.

Table 8 – Minimum immunity requirements for voltage deviations, dips and short interruptions on main power ports of rated voltage above 1 000 V of PDSs

Phenomenon	Reference document	Level		Performance (acceptance) criterion
Voltage deviations exceeding 1 min	IEC 61000-2-4 Class 3	±10 %		A [a]
Voltage deviations not exceeding 1 min	IEC 61000-2-4 Class 3	~~Maximum step amplitude: 12 % of nominal voltage within the tolerance band~~ +10 % to –15 %		A [a]
~~Voltage changes~~	~~IEC 61000-2-4~~ ~~Class 3~~	~~Minimum interval between steps: 2 s~~		~~A [a]~~
~~Voltage dips and short interruptions~~	~~IEC 61000-2-1 [b]~~	~~Depth and duration~~ ~~15 % to 50 % and $t \leq 100$ ms~~ ~~15 % to 100 %~~		~~B, C [c]~~ ~~C~~
Voltage dips	IEC 61000-4-34 [b]	Volts remaining 0 % 40 % 70 % 80 %	Cycles 1 10/12 [c] 25/30 [c] 250/300 [c]	C [d]
Short interruptions	IEC 61000-4-34 [b]	Volts remaining 0 %	Cycles 250/300 [c]	C [d]

[a] "Voltage deviation" is a supply voltage variation from the nominal supply voltage. Testing of voltage deviations for three phase PDSs requires increasing or reducing the voltage of all three phases simultaneously.

When considering voltage deviations, any voltage steps shall not exceed ±12 % of nominal voltage and the time between steps shall not be less than 2 s.

When the voltage is below nominal, the maximum output power ratings – speed and/or torque – may be reduced, because they are voltage dependent.

~~The possible consequence of exceeding the level is T or D (see note 3 in 5.2.1), in the last case the system supplier should provide information on the actual behaviour of the PDS.~~

[b] Typical depths and durations of voltage dips are given in ~~8.1.2 of IEC 61000-2-1~~ IEC TR 61000-2-8.

~~[c] Criterion C applies only to line or load-commutated thyristor controlled converters.~~

[c] "x/y cycles" means "x cycles for 50 Hz test" and "y cycles for 60 Hz test".

[d] Opening of fuses is allowed for line-commutated converters operating in inverting mode.

The manufacturer shall state in the user documentation the degradation of performance resulting from voltage dips or short interruptions.

AVA Documents Document Sharing Hub

5.2.3.2.2 Auxiliary power port

The auxiliary power ports of PDSs shall sustain the immunity levels given in Table 9. The manufacturer may verify immunity by calculation, simulation, or test, and shall state the chosen verification method in the test report.

Table 9 – Minimum immunity requirements for voltage deviations, dips and short interruptions on auxiliary low voltage power ports of PDSs

Phenomenon	Reference document	Level		Performance (acceptance) criterion
Voltage deviations exceeding 1 min	IEC 61000-2-4 Class 3	±10 %		A ~~[a]~~
Voltage deviations not exceeding 1 min	IEC 61000-2-4 Class 3	+10 % to –15 %		A ~~[a]~~
~~Voltage dips and short interruptions~~	~~IEC 61000-2-1 [b]~~	~~Depth and duration~~ ~~15 % to 50 % and $t \leq$ 100 ms~~ ~~15 % to 100 % and $t \leq$ 5 s~~		 ~~B~~ ~~B~~
Voltage dips	IEC 61000-4-11 or IEC 61000-4-34 [b]	Volts remaining	Cycles	C
		0 %	1	
		40 %	10/12 [a]	
		70 %	25/30 [a]	
		80 %	250/300 [a]	
Short interruptions	IEC 61000-4-11 Class 3 or IEC 61000-4-34 Class 3 [b]	Volts remaining	Cycles	C
		0 %	250/300 [a]	

~~[a] The possible consequence of exceeding the level is T (see note 3 in 5.2.1).~~

[a] "x/y cycles" means "x cycles for 50 Hz test" and "y cycles for 60 Hz test".

~~[b] Typical depths and durations of voltage dips are given in 8.1.2 of IEC 61000-2-1.~~

[b] IEC 61000-4-11 applies to equipment less or equal to 16 A and IEC 61000-4-34 applies to equipment above 16 A.

5.2.4 Voltage unbalance and frequency variations

5.2.4.1 Low voltage PDSs

Definition and assessment of voltage unbalance are explained in B.5.2.

The PDS or BDM/CDM shall comply with the immunity levels given in Table 10. The manufacturer may verify immunity by calculation, simulation, or test, and shall state the chosen verification method in the test report. During verification, the rated load condition shall be used.

Documents
Document Sharing Hub
Full document details: IEC 61800-3 2017 RLV

Table 10 – Minimum immunity requirements for voltage unbalance and frequency variations on power ports of low voltage PDSs

Phenomenon	First environment		Second environment		Performance (acceptance) criterion
	Reference document	Level	Reference document	Level	
Voltage unbalance [a]	IEC 61000-2-2	2 % negative sequence component	IEC 61000-2-4 Class 3	3 % negative sequence component	A[b]
Frequency variations	IEC 61000-2-2	±2 %	IEC 61000-2-4	±2 % ±4 % where the supply is separated from public supply networks	A
Frequency rate of change		1 %/second		±1 %/s 2 %/s where the supply is separated from public supply network	A

[a] Not relevant for single phase PDSs.
[b] In case of test, use test time of 30 s ± 5 s.

5.2.4.2 PDSs of rated voltage above 1 000 V

5.2.4.2.1 Main power port

Definition and assessment of voltage unbalance are explained in B.5.2.

The PDS or BDM/CDM shall sustain the immunity levels given in Table 11. The manufacturer may verify immunity by calculation, simulation, or test, and shall state the chosen verification method in the test report. During verification, the rated load condition shall be used.

Table 11 – Minimum immunity requirements for voltage unbalance and frequency variations on main power ports of rated voltage above 1 000 V of PDSs

Phenomenon	Reference document	Level	Performance (acceptance) criterion
Voltage unbalance	IEC 61000-2-4 Class 2	2 % negative sequence component	A
Frequency variations	IEC 61000-2-4	±2 % ±4 % where the supply is separated from public supply networks	A ~~[b]~~ A ~~[c]~~
Frequency rate of change		±1 %/s 2 %/s where the supply is separated from public supply networks	A ~~[b]~~ A ~~[c]~~

~~[a] The possible consequence of exceeding the level is F or T. In the latter case, the system supplier should provide information on the actual behaviour of the PDS (see note 3 in 5.2.1).~~
~~[b] The possible consequence of exceeding the level is F (see note 3 in 5.2.1).~~
~~[c] The possible consequence of exceeding the level is T (see note 3 in 5.2.1).~~

Documents
Document Sharing Hub
Full document details: IEC 61800-3 2017 RLV

5.2.4.2.2 Auxiliary power port

Definition and assessment of voltage unbalance are explained in B.5.2.

The auxiliary power ports of PDSs shall sustain the immunity levels given in Table 12. The manufacturer may verify immunity by calculation, simulation, or test, and shall state the chosen verification method in the test report.

Table 12 – Minimum immunity requirements for voltage unbalance and frequency variations on auxiliary low voltage power ports of PDSs

Phenomenon	Reference document	Level	Performance (acceptance) criterion
Voltage unbalance	IEC 61000-2-4 Class 3	3 % negative sequence component	A
Frequency variations	IEC 61000-2-4	±2 % ±4 % where the supply is separated from public supply networks	A ~~[b]~~ A ~~[c]~~
~~[a] The possible consequence of exceeding the level is F or T. In the latter case, the system supplier should provide information on the actual behaviour of the PDS (see note 3 in 5.2.1).~~ ~~[b] The possible consequence of exceeding the level is F (see note 3 in 5.2.1).~~ ~~[c] The possible consequence of exceeding the level is T (see note 3 in 5.2.1).~~			

5.2.5 Supply influences – Magnetic fields

Immunity tests according to IEC 61000-4-8 are not required (see Clause A.3 for explanation).

5.3 Basic immunity requirements – High-frequency disturbances

5.3.1 Conditions

In the following Table 13 and Table 14, the minimum immunity requirements for high-frequency disturbance tests and acceptance criteria are stated. The acceptance criteria refer to 5.1.1. Explanations are given in Clause A.3.

5.3.2 First environment

The levels in Table 13 shall be applied to PDSs which are intended to be used in the first environment.

If a CDM/BDM is designed to have immunity according to Table 13, it shall include a written warning in the instructions for use which indicates that it is not intended to be used in an industrial installation.

Documents
Document Sharing Hub
Full document details: IEC 61800-3 2017 RLV

Table 13 – Minimum immunity requirements for PDSs intended for use in the first environment

Port	Phenomenon	Basic standard for test method	Level	Performance (acceptance) criterion
Enclosure port	ESD (electrostatic discharge)	IEC 61000-4-2	4 kV CD or 8 kV AD if CD impossible	B
	Radio-frequency electromagnetic field, amplitude modulated	IEC 61000-4-3 see also 5.3.4	80 MHz to 1 000 MHz 3 V/m 80 % AM (1 kHz)	A
	Radio-frequency electromagnetic field, amplitude modulated	IEC 61000-4-3 See also 5.3.4	1,4 GHz to 2,0 GHz 3 V/m 80 % AM (1 kHz)	A
	Radio-frequency electromagnetic field, amplitude modulated	IEC 61000-4-3 See also 5.3.4	2,0 GHz to 2,7 GHz 1 V/m 80 % AM (1 kHz)	A
Power ports (except auxiliary DC power ports below 60 V)	Fast transient-burst	IEC 61000-4-4	1 kV/5 kHz [a]	B
	Surge [b] 1,2/50 µs, 8/20 µs	IEC 61000-4-5	1 kV [c] 2 kV [d]	B
	Conducted radio-frequency common mode	IEC 61000-4-6 see also 5.3.4	0,15 MHz to 80 MHz 3 V 80 % AM (1 kHz)	A
Power interfaces	Fast transient-burst [e]	IEC 61000-4-4	1 kV/5 kHz Capacitive clamp	B
Ports for process measurement control lines and signal interfaces Auxiliary DC power ports below 60 V	Fast transient-burst [e]	IEC 61000-4-4	~~1~~ 0,5 kV/5 kHz Capacitive clamp	B
	Conducted radio-frequency common mode [e]	IEC 61000-4-6 see also 5.3.4	0,15 MHz to 80 MHz 3 V 80 % AM (1 kHz)	A

CD: contact discharge AD: air discharge AM: amplitude modulation

[a] Power ports with current rating < 100 A: direct coupling using the coupling and decoupling network. Power ports with current rating ≥ 100 A: direct coupling or capacitive clamp without decoupling network. If the capacitive clamp is used, test level shall be 2 kV/5 kHz. The chosen test method shall be stated in the test report.

[b] Applicable only to power ports with current consumption < 63 A during light load test conditions as specified in 5.1.3. ~~The rated impulse voltage of the basic insulation shall not be exceeded (see IEC 60664-1).~~

[c] Coupling line-to-line.

[d] Coupling line-to-earth.

[e] Applicable only to ports or interfaces with cables whose total length according to the manufacturer's functional specification may exceed 3 m.

5.3.3 Second environment

The levels in Table 14 shall be applied to PDSs which are intended to be used in the second environment. This also applies to the low voltage ports, or the low voltage interfaces (power, signal) of PDSs of rated voltage above 1 000 V.

NOTE Examples of low voltage ports and interfaces of a PDS of rated voltage above 1 000 V are as follows:

AVA Documents Document Sharing Hub

Full document details: IEC 61800-3 2017 RLV

LV enclosure port	enclosure of auxiliaries, control and protection;
LV power ports	LV power supply of PDS;
LV power interfaces	auxiliary supply distribution within main components of PDS;
LV signal interfaces	LV signal interfaces within main components of PDS;
LV process port	signal port of the PDS.

Documents
Document Sharing Hub
Full document details: IEC 61800-3 2017 RLV

Table 14 – Minimum immunity requirements for PDSs intended for use in the second environment

Port	Phenomenon	Basic standard for test method	Level	Performance (acceptance) criterion
Enclosure port	ESD (electrostatic discharge)	IEC 61000-4-2	4 kV CD or 8 kV AD if CD impossible	B
	Radio-frequency electromagnetic field, amplitude modulated	IEC 61000-4-3 see also 5.3.4	80 MHz to 1 000 MHz 10 V/m 80 % AM (1 kHz)	A
	Radio-frequency electromagnetic field, amplitude modulated	IEC 61000-4-3 see also 5.3.4	1,4 GHz to 2,0 GHz 3 V/m 80 % AM (1 kHz)	A
	Radio-frequency electromagnetic field, amplitude modulated	IEC 61000-4-3 see also 5.3.4	2,0 GHz to 2,7 GHz 1 V/m 80 % AM (1 kHz)	A
Power ports (except auxiliary DC power ports below 60 V)	Fast transient-burst	IEC 61000-4-4	2 kV/5 kHz [a]	B
	Surge [b] 1,2/50 µs, 8/20 µs	IEC 61000-4-5	1 kV [c] 2 kV [d]	B
	Conducted radio-frequency common mode [e]	IEC 61000-4-6 see also 5.3.4	0,15 MHz to 80 MHz 10 V 80 % AM (1 kHz)	A
Power Interfaces	Fast transient-burst [e]	IEC 61000-4-4	2 kV/5 kHz Capacitive clamp	B
Signal interfaces	Fast transient-burst [e]	IEC 61000-4-4	1 kV/5 kHz Capacitive clamp	B
	Conducted radio-frequency common mode [e]	IEC 61000-4-6 see also 5.3.4	0,15 MHz to 80 MHz 10 V 80 % AM (1 kHz)	A
Ports for process measurement control lines Auxiliary DC power ports below 60 V	Fast transient-burst [e]	IEC 61000-4-4	2 kV/5 kHz Capacitive clamp	B
	Surge [f] 1,2/50 µs, 8/20 µs	IEC 61000-4-5	1 kV [d,f]	B
	Conducted radio-frequency common mode [e]	IEC 61000-4-6 see also 5.3.4	0,15 MHz to 80 MHz 10 V 80 % AM (1 kHz)	A
CD: contact discharge AD: air discharge AM: amplitude modulation				

[a] Power ports with current rating < 100 A: direct coupling using the coupling and decoupling network. Power ports with current rating ≥ 100 A: direct coupling or capacitive clamp without decoupling network. If the capacitive clamp is used, the test level shall be 4 kV/~~2,5~~ 5 kHz. The chosen test method shall be stated in the test report.

[b] Applicable only to power ports with current consumption < 63 A during light load test conditions as specified in 5.1.3. ~~The rated impulse voltage of the basic insulation shall not be exceeded (see IEC 60664-1).~~

[c] Coupling line-to-line.

[d] Coupling line-to-earth.

[e] Applicable only to ports or interfaces with cables whose total length according to the manufacturer's functional specification may exceed 3 m.

[f] Applicable only to ports with cables whose total length according to the manufacturer's functional specification may exceed 30 m. In the case of a shielded cable, a direct coupling to the shield is applied. This immunity requirement does not apply to fieldbus or other signal interfaces where the use of surge protection devices is not practical for technical reasons. The test is not required where normal functioning cannot be achieved because of the impact of the coupling/decoupling network on the equipment under test (EUT).

AVA Documents Document Sharing Hub

These phenomena are not relevant for application to the ports of rated insulation voltage above 1 000 V. For simplicity, such ports are named HV ports of PDSs of rated voltage above 1 000 V.

NOTE Examples of HV ports and interfaces of a PDS of rated voltage above 1 000 V are as follows:

HV enclosure port	enclosure of transformer, converter section and motor;
HV power port	primary side of transformer;
HV power interfaces	HV distribution within main components of PDS;
HV signal interfaces	HV signal interfaces within main components of PDS.

5.3.4 Immunity against electromagnetic fields

If the PDS is

– of rated voltage not more than 500 V,
– of rated current not more than 200 A,
– of total mass not more than 250 kg, and
– of height, width, and depth not more than 1,9 m,

the tests of IEC 61000-4-3 and IEC 61000-4-6 shall be performed (see 5.3.2 and 5.3.3).

If the PDS is larger or of higher rating than in the above paragraph, then the manufacturer shall choose either

– to perform the tests of IEC 61000-4-3 and IEC 61000-4-6 on the PDS, or
– to perform the tests of IEC 61000-4-3 and IEC 61000-4-6 on sensitive sub-components and state the chosen test method in the test report.

If the motor is too large to be put into service on a test site, the motor may be replaced by one of smaller size, provided this does not adversely affect the operation of the CDM/BDM.

~~In the case where only sub-components have been tested, a test against radio-communication devices of common industrial use should be performed on the complete PDS, as described in A.3.2.2. This test is only valid for the specific location, installed equipment and frequencies tested.~~

5.4 Application of immunity requirements – Statistical aspect

When choosing the acceptance level for a specific test of a PDS, it shall be understood that the test result implies only a probability of performance. Depending on the acceptance criterion and the application of a PDS, this probability shall be considered in specifying the number of test pulses or duration of the test.

Immunity requirements in 5.3 shall be verified by performing a type-test on a representative unit. The manufacturer or supplier shall ensure the EMC performance of the product is maintained in production by using some form of quality control.

Measurement results obtained for a PDS while installed in its place of use (not on a test site) shall relate to that installation only.

Documents
Document Sharing Hub
Full document details: IEC 61800-3 2017 RLV

6 Emission

6.1 General emission requirements

The measurements shall be made in the operating mode producing the largest emission in the frequency band, while being consistent with the normal application.

Table 15 summarises the requirements, according to the classification of the PDS (see 3.2).

Documents
Document Sharing Hub

Full document details: IEC 61800-3 2017 RLV

Table 15 – Summary of emission requirements

Category	Low-frequency Disturbance voltage (power port)	High-frequency Disturbance voltage (power port)	Radiated emissions (enclosure port and others)
Category C1	Product assessment Requirements: - 6.2.2, - 6.2.3.1 or 6.2.3.2 or 6.2.3.3, - 6.2.4, - 6.2.5 Recommendations on load conditions: - B.2.3.3 and B.3.2 ~~1st environment~~	Product assessment Conducted emission limits: - 6.4.1.1, Table 16	Product assessment Radiated emission limits: - 6.4.1.3, Table 17 Other emission requirements: - 6.4.1.2; - 6.4.1.4
Category C2	Product assessment Requirements: - 6.2.2, - 6.2.3.1 or 6.2.3.2 or 6.2.3.3, - 6.2.4, - 6.2.5 Recommendations on load conditions: - B.2.3.3 and B.3.2 ~~1st environment or public network.~~	Product assessment Conducted emission limits: - 6.4.1.1, Table 16 Warning in the instruction for use: - 6.4.1.1	Product assessment Radiated emission limits: - 6.4.1.3, Table 17 Other emission requirements: - 6.4.1.2; - 6.4.1.4 Warning in the instruction for use: - 6.4.1.3
Category C3	Product assessment Requirements: - 6.2.2, - 6.2.3.4, - 6.2.4, - 6.2.5 Recommendations on load conditions: - B.2.3.3 and general rules B.3.3 and B.4 ~~2nd environment~~	Product assessment Conducted emission limits: - 6.4.2.2, Table 19 Warning in the instruction for use: - 6.4.2.1	Product assessment Radiated emission limits: - 6.4.2.4, Table 20 Other emission requirements: - 6.4.2.3 Warning in the instruction for use: - 6.4.2.1
Category C4	Engineering practice Requirements: - 6.2.2, - 6.2.3.4, - 6.2.4, - 6.2.5 Recommendations on load conditions: - B.2.3.3 and general rules B.3.3 and B.4 ~~2nd environment~~	Engineering practice Either - apply the requirements of Category C3 above, or - 6.5~~ – EMC plan~~	Engineering practice Either - apply requirements of Category C3 above, or - 6.5~~ – EMC plan~~

Documents
Document Sharing Hub
Full document details: IEC 61800-3 2017 RLV

6.2 Basic low-frequency emission limits

6.2.1 Compliance method

Compliance can be verified by calculation, simulation or test. The chosen verification method shall be stated in the test report.

6.2.2 Commutation notches

Commutation notches are measured on the power ports using an oscilloscope (see B.1.1). They are produced by controlled line-commutated converters ~~(see 2.5.4.1 of IEC 60146-1-1)~~.

Where it is known that the input circuit of the PDS does not produce notches or only produces notches of negligible amplitude (for example diode rectifiers), emission of notches need not be considered.

~~NOTE 1~~ The main practical case where emission of notches should be considered is the case of thyristor converters (line commutated). RFI filters are practical cases of equipment which can be affected by notches. They can be overloaded or subjected to repetitive overvoltages.

NOTE A diode rectifier is an uncontrolled line-commutated converter, which produces commutation notches of negligible amplitude. Some self-commutated converters (for example an indirect converter of the voltage source inverter type with an active front end) can produce commutation notches depending on the PWM pattern.

Where notches are to be considered, the manufacturer shall provide the following information to the user:

- value of any decoupling reactances which are included in the PDS;
- available decoupling reactances which can be externally added for mitigation (see B.1.2).

The recommendations of B.1.3 should be followed.

6.2.3 Harmonics and interharmonics

6.2.3.1 Low-voltage public supply network – Equipment covered by IEC 61000-3-2

Equipment may contain one or several PDSs and also other loads.

When a PDS is ~~an equipment~~ within the scope of IEC 61000-3-2, the requirements of that standard apply. However, when one or more PDSs are included in equipment within the scope of IEC 61000-3-2, the requirements of that standard apply to the complete equipment and not to the individual PDS. It is the responsibility of the equipment manufacturer to define the boundary of the system or sub-system to which IEC 61000-3-2 applies, and the method which demonstrates compliance of the equipment.

6.2.3.2 Low-voltage public supply network – Equipment covered by IEC 61000-3-12

When a PDS is within the scope of IEC 61000-3-12, the requirements of that standard apply. However, when one or more PDSs are included in equipment within the scope of IEC 61000-3-12, the requirements of that standard apply to the complete equipment and not to the individual PDS. It is the responsibility of the equipment manufacturer to define the boundary of the system or sub-system to which IEC 61000-3-12 applies, and the method which demonstrates compliance of the equipment.

6.2.3.3 Low-voltage public supply network – Equipment not covered by IEC 61000-3-2 or IEC 61000-3-12

For equipment not covered by IEC 61000-3-2 or IEC 61000-3-12 (rated current above ~~16~~ 75 A) recommendations may be found ~~in the technical report IEC 61000-3-4 and~~ in Clause B.4. ~~Where, for technical or economic reasons as explained in Annexes B and C of this standard,~~

AVA Documents
Document Sharing Hub

~~stage 1 or stage 2 of IEC 61000-3-4 cannot be applied, the approach of stage 3 is facilitated by Annex B.~~

The manufacturer shall provide in the documentation of the PDS, or on request, the ratio of the current harmonic level *THC*, under rated load conditions, ~~as a percentage of the rated fundamental~~ to the RMS current on the power port, as well as the harmonic currents up to the 40th harmonic. This may be produced by calculation, simulation or test.

For the purpose of calculation or simulation, the applied voltage shall be assumed to have a *THD* less than 1 %. The internal impedance of the network shall be assumed to be purely inductive. If the specific location of the PDS is not known, the harmonic currents shall be calculated assuming that the PDS is connected to a PC with the highest value of R_{SI} permitted by the PDS manufacturer.

$$R_{SI} = \frac{I_{SC}}{I_{LN}}$$

where

I_{SC} is the short circuit current at the considered PC;

I_{LN} is the rated input current of the PDS.

If the manufacturer does not state a maximum value of R_{SI}, a value of 250 shall be assumed. If the specific location of the PDS is known, the supply impedance at that location ~~should~~ shall be used.

~~The PDS manufacturer shall calculate the harmonic currents for each order up to the 40th. The current *THD* (orders up to and including 40) shall also be calculated.~~

A guide for calculation of harmonics is given in Clause A.1 and Clause A.2 of IEC TR 61000-2-6:1995. Guidelines for the summation of harmonics of different sources are also given in 7.4 of IEC TR 61000-2-6:1995.

Effects of interharmonics are considered in B.4.3. Methods for calculation are given in Annex C of IEC TR 61000-2-6:1995.

6.2.3.4 Industrial networks

If a PDS is to be used in an installation which is not directly supplied from a public low voltage network, IEC 61000-3-2 and IEC ~~61000-3-4~~ 61000-3-12 are not applicable. Therefore, a reasonable approach which considers the total installation should be used (see Clause B.4).

NOTE For network voltages above 1 000 V, the total installation ~~may~~ can be subject to rules from the utility, usually based on IEC TR 61000-3-6. These rules apply to the installation as a whole, not to individual equipment. These rules usually take the existing harmonic currents and voltage distortion within the system into account. An efficient and simplified approach is provided by Table B.2.

In the case of a PDS of rated voltage above 1 000 V, harmonic emissions from the main power port and the auxiliary power ports shall be considered separately.

6.2.4 Voltage fluctuations

6.2.4.1 Conditions

Equipment may contain one or several PDSs and also other loads which are capable of causing voltage fluctuations.

NOTE 1 Voltage fluctuations ~~may~~ can be caused, for instance, by frequently changing the load of a PDS, or by sub-harmonics of slip energy recovery of asynchronous motors. Voltage fluctuations ~~may~~ can also be caused by interharmonics at frequencies slightly different from the fundamental or from predominant harmonics. The emission

AVA Documents Document Sharing Hub

is typically generated by cyclo-converters or current source inverters. See B.4.3 and B.6.2. Interharmonics are covered by compatibility levels given in IEC 61000-2-4 or in IEC 61000-2-12.

NOTE 2 Voltage fluctuations are dependent on the impedance of the installation and the duty cycle of the load. In some applications, the user ~~may~~ can reduce voltage fluctuations by adjusting the load duty cycle by changing speed ramp rate or using other techniques.

~~NOTE 3~~ Most voltage fluctuations depend upon the installation. Therefore, this system aspect should be the responsibility of the user or of the installer. The compatibility levels given in IEC 61000-2-4 for voltage changes should not be exceeded considering cumulative effects from all equipment.

~~**6.2.4.2 Low voltage PDSs**~~

~~When a PDS is equipment within the scope of IEC 61000-3-3, the requirements of that standard apply. However, when one or more PDSs are included in equipment within the scope of IEC 61000-3-3, the requirements of that standard apply to the complete equipment and not to the individual PDS.~~

~~When a PDS is an equipment within the scope of IEC 61000-3-11, the requirements of that standard apply. However, when one or more PDSs are included in equipment within the scope of IEC 61000-3-11, the requirements of that standard apply to the complete equipment and not to the individual PDS.~~

~~**6.2.4.3 PDSs of rated voltage above 1 000 V**~~

~~The technical report IEC 61000-3-7 applies to the total installation considering all circuits on the load side of the PCC. Application of this report generally results in local rules from the utility. Compliance with the rules requires the assessment of total fluctuation emission of the total installation to which the considered PDS contributes.~~

~~NOTE Most voltage fluctuations are relevant to the installation. Therefore, this system aspect should be the responsibility of the user or of the installer. The compatibility levels given in IEC 61000-2-12 for voltage changes should not be exceeded considering cumulative effects from all equipment.~~

6.2.4.2 PDS in the scope of IEC 61000-3-3 and IEC 61000-3-11

When a PDS is within the scope of IEC 61000-3-3, the requirements of that standard apply. However, when one or more PDSs are included in equipment within the scope of IEC 61000-3-3, the requirements of that standard apply to the complete equipment and not to the individual PDS.

When a PDS is within the scope of IEC 61000-3-11, the requirements of that standard apply. However, when one or more PDSs are included in equipment within the scope of IEC 61000-3-11, the requirements of that standard apply to the complete equipment and not to the individual PDS.

NOTE Application of the voltage fluctuation limits of IEC 61000-3-3 and 61000-3-11 is only possible when the characteristics of the load provided by the driven equipment are known. For that reason, only the machine builder and/or end user are capable of characterizing compliance with regard to the voltage fluctuation limits.

6.2.4.3 PDS not in the scope of IEC 61000-3-3 and IEC 61000-3-11

For equipment not in the scope of IEC 61000-3-3 and IEC 61000-3-11, emissions of voltage fluctuations are generally dependent on the loading conditions and this document cannot give requirements.

NOTE Local rules given by local authorities can apply to the complete installation.

6.2.5 Emissions in the frequency range from 2 kHz to 9 kHz

In the frequency range from 2 kHz to 9 kHz, limits are not specified.

Documents
Document Sharing Hub

Full document details: IEC 61800-3 2017 RLV

NOTE 1 IEC SC 77A is working on compatibility levels in this frequency range.

NOTE 2 Until limits are specified in this frequency range, design recommendations for emission values for PDS and CDM can be found in IEC TS 62578:2015, Annex B.

6.2.6 Common mode harmonic emission (low-frequency common mode voltage)

The switching frequency of the converter of the PDS is often in the audible frequency range and, in particular, the frequency range commonly used by telephone and data systems. To avoid the risk of crosstalk to signal cables, the installation instructions shall either recommend that the power interface cable be segregated from signal cables or state alternative mitigation methods.

6.3 Conditions related to high-frequency emission measurement

6.3.1 General requirements

6.3.1.1 Common conditions

The rate of change of voltage or current is expected to be the main source of high-frequency emission. For this type of ~~emission~~ disturbance, the highest values of the dv/dt ~~values of the PDS~~ are mostly relevant ~~and these can be achieved~~ which usually occurs with output currents lower than the rated current of the PDS. Therefore, these tests are light load tests. The tests shall be applied to the relevant ports where they exist and shall be performed in a well-defined and reproducible manner on a port-by-port basis.

The test method shall comply with 7.3 to 7.4 and Clause 8 of CISPR 11:2015/AMD1:2016~~, paying particular attention to earth connections~~. The requirements for configuration of test setup for the PDS considering cables arrangement are derived from 7.5 of CISPR 11:2015/AMD1:2016, paying particular attention to earth connections. An example for a typical PDS test set up and cable arrangement for measurements of radiated disturbances in 3 m separation distance is described in 6.3.1.3 below. The load and cable lengths shall be within the manufacturer's specification and the actual load and power interface cable length shall be noted in the test report.

It shall be stated in the test report whether the tests have been performed on a test site or as *in situ* tests.

6.3.1.2 Conducted emissions

The measurement equipment for evaluation of high-frequency mains terminal (power port) disturbance voltage emission is either the artificial mains network (50 Ω/50 μH, see CISPR 16-1-2 and CISPR 11) where it can be applied, or the high impedance voltage probe according to 5.2.1 of CISPR 16-1-2:2014, where the artificial mains network is not applicable. The chosen test method shall be stated in the test report. Common-mode absorption devices (CMAD) shall not be used as part of the test setup for conducted emission measurement.

NOTE A CMAD is a piece of test equipment placed on certain cables during radiated emission measurements to improve reproducibility (see 6.3.1.3.4).

For *in situ* measurement of the mains disturbance voltage, a high impedance voltage probe without an artificial mains network shall be used (see 7.3.3 of CISPR 11:2015). The same can be applied if the PDS has an input current greater than 100 A, or if the input voltage is greater than or equal to 500 V, or if the PDS contains a line commutated converter (see A.4.1.2).

6.3.1.3 Radiated emissions

6.3.1.3.1 Type of test site

Equipment of category C1 and category C2 shall be measured on a test site compliant with requirements of CISPR 16-1-4. The measurement distance shall be stated in the test report.

AVA Documents
Document Sharing Hub
Full document details: IEC 61800-3 2017 RLV

Equipment of category C3 should preferably be tested on a test site compliant with requirements of CISPR 16-1-4. However, when this proves to be impossible for practical reasons of weight, size or power, tests may be done in a location not fully compliant with the test site requirements. The use of this location shall be justified in the test report.

In the case of radiated emission tests on a test site, CISPR 11 allows test sites that are either an open-area test site (OATS) or a semi-anechoic chamber (SAC).

NOTE For radiated emissions measurement in a fully-anechoic room (FAR) test conditions and requirement are under consideration in CISPR/B. It is intended that they will be made available in CISPR 11.

6.3.1.3.2 Test volume

The measurement distance is considered between the reference point (RP) of the antenna calibration and the boundary of the EUT's test volume (see Figure 5 to Figure 7).

The selection of measurement distances shall comply with the requirements of 6.2.2.3 and 8.3.4 of CISPR 11:2015.

The boundary of the EUT's test volume is the imaginary cylinder around the complete configuration of the EUT. This boundary is shown as item H in Figure 5 and Figure 6. The motor and all the cables shall be inside the imaginary cylinder unless the cables leave the cylinder through CMAD(s). The height of the imaginary cylinder is measured from the floor, regardless of whether the EUT is table-top, wall-mounted equipment or standing on the floor.

The EUT is considered as small size equipment if the boundary of the EUT's test volume complies with the definition of 3.1.5. The maximum boundary for small size equipment is shown as item K in Figure 5 to Figure 7. The dimensions of the test volume should be measured with a tolerance of ±0,1 m.

The use of CMADs is recommended, as they contribute to reproducible test results. However, the use of CMADs is not mandatory. They serve to define the common mode impedance and resonances in the frequency range above 30 MHz, thus improving reproducibility.

6.3.1.3.3 Selection of measurement distance

Subclauses 6.4.1.3 and 6.4.2.4 give emission limits for tests at 10 m and 3 m distance.

Small size equipment meeting the size criterion defined in 3.1.5 may be tested at either 10 m or 3 m. Equipment not meeting this size criterion shall be tested at 10 m.

Special requirements relating to the test setup are specified in 6.3.1.3.4 to 6.3.1.3.6 for better reproducibility of measurement at 3 m. In cases where these requirements are practical for measurement at 10 m distance, they will also improve reproducibility at that distance.

6.3.1.3.4 Auxiliaries and peripherals

When auxiliaries or peripheral equipment are not part of the EUT (see EUT 2 in Figure 5 and Figure 6) they may be placed outside the test volume. However, if they cannot be excluded from the maximum test volume because the interconnecting cables are too short or for other reasons, these auxiliaries or peripheral equipment are put on the positioning table or on the insulated plane.

Restriction of radiation assessment to the cable fractions inside the test volume can be achieved for example by application at the cables of common-mode absorption devices (CMAD) at the position where they leave the test volume. CISPR 16-2-3 gives further guidance on the application of CMAD(s).

Documents
Document Sharing Hub
Full document details: IEC 61800-3 2017 RLV

6.3.1.3.5 Motor

For radiated emission, light load condition is usually acceptable for the PDS operation (see A.2.1 for information on load conditions).

The power rating of the motor used during the radiated emission test may be lower than the power rating of the CDM, but shall be large enough to allow correct operation of the inverter part of the CDM.

The motor can be put inside or outside the test volume. The power interface cable between the CDM/BDM and the motor shall be exposed to the antenna with at least 0,8 m length inside the test volume, unless the maximum cable length stated in the information for the user is shorter.

The position of the motor and the cable arrangement shall be stated in the test report.

6.3.1.3.6 Layout of setup for radiated emission tests

Examples of typical layouts for radiated emission tests are given in Figure 5 to Figure 7 below.

If a special earthing conductor is used (see "C" in Figure 7), its length shall be at least 1 m, and it shall be connected as shown in the user documentation.

NOTE 1 An example of a special earthing conductor is a second protective earthing conductor, which could be used for compliance with 4.3.5.5.2 of IEC 61800-5-1:2007.

If the motor is placed far from the turntable, the motor cable can be passed through the floor of the turntable (see dotted line path "A" in Figure 7). If the motor is placed beside the turntable (see "F" in Figure 7) and prevents the turntable from moving, special care should be considered for performing radiated emission measurement as for *in situ* condition (see A.4.2).

The use of an AMN in radiated emission tests is recommended but not mandatory.

Auxiliaries and peripheral equipment that are not part of the EUT should be located outside the test volume. However, if the connecting cables between them and the EUT cannot be extended to run outside the test volume, these auxiliaries and peripherals can be placed inside the test volume (see Figure 5 and Figure 6) or on the turntable (see Figure 7).

The spacing between all enclosures (EUT, peripheral etc.) should be ≥ 0,1 m. This is shown by item "D" in Figure 5 to Figure 7.

Where an interconnecting cable has an excess length, item "B" in Figure 5 and Figure 7 shows a cable bundle, as required by 7.5.2 of CISPR 11:2015. The excess cable is bundled between 0,3 m and 0,4 m in the middle of the cable length.

NOTE 2 The reference point of the antenna calibration is considered for the measuring distance as shown by item "RP" in Figure 5 to Figure 7.

Documents
Document Sharing Hub

Full document details: IEC 61800-3 2017 RLV

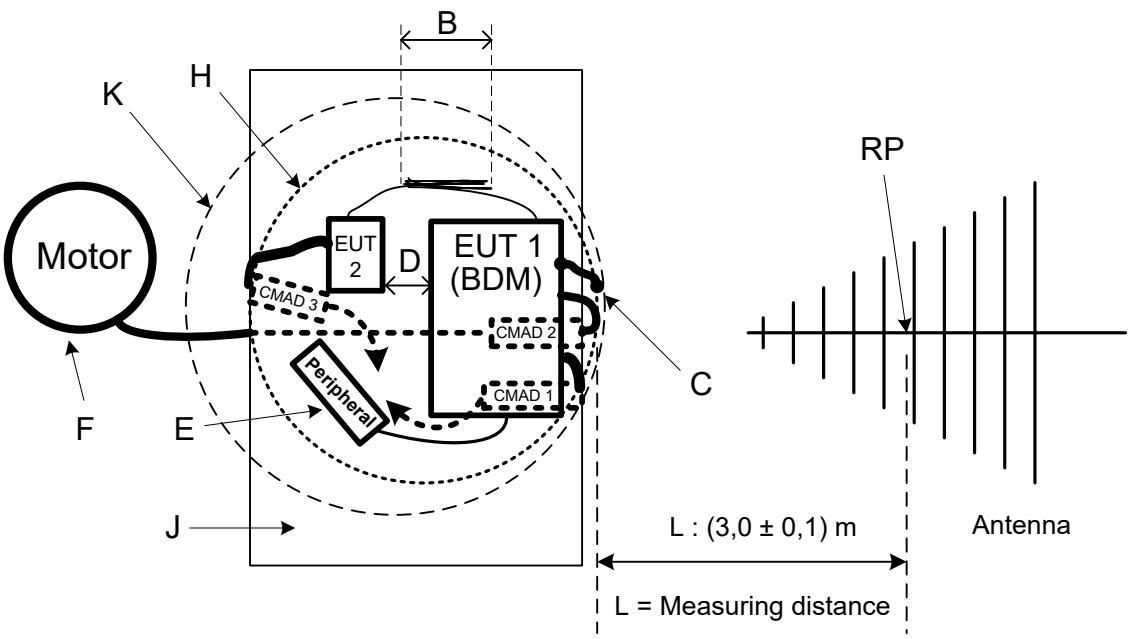

Key

B Excess cable is in a bundle of between 0,3 m and 0,4 m in the middle of the cable length.

C Special earthing connection, only if specified in the user documentation.

D Spacing between enclosures should be ≥ 0,1 m.

E The peripheral or auxiliary device is in the test volume only if the cables cannot be extended to allow the peripheral to be outside the test volume.

F Motor

H Test volume. This is the boundary of the imaginary cylinder around the complete configuration of the EUT (BDM/CDM parts of the PDS).

J Positioning table of insulating material, with height 0,8 m ± 0,01 m above the ground plane.

K Boundary of maximum test volume for small size equipment as defined in 3.1.5.

L Measuring distance. This distance is measured between the test volume, H, and the reference point of the antenna calibration, RP.

RP Reference point of the antenna calibration

Figure 5 – Example for a typical cable arrangement for measurements in 3 m separation distance, for a table-top or wall-mounted equipment, top view

Documents
Document Sharing Hub
Full document details: IEC 61800-3 2017 RLV