IEC 61837-2

Edition 3.0 2018-05

INTERNATIONAL STANDARD

Surface mounted piezoelectric devices for frequency control and selection – Standard outlines and terminal lead connections – Part 2: Ceramic enclosures

IEC 61837-2:2018-05(en)

Documents
Document Sharing Hub

Full document details: IEC 61837-2 2018

THIS PUBLICATION IS COPYRIGHT PROTECTED

Copyright © 2018 IEC, Geneva, Switzerland

All rights reserved. Unless otherwise specified, no part of this publication may be reproduced or utilized in any form or by any means, electronic or mechanical, including photocopying and microfilm, without permission in writing from either IEC or IEC's member National Committee in the country of the requester. If you have any questions about IEC copyright or have an enquiry about obtaining additional rights to this publication, please contact the address below or your local IEC member National Committee for further information.

IEC Central Office
3, rue de Varembé
CH-1211 Geneva 20
Switzerland

Tel.: +41 22 919 02 11
info@iec.ch
www.iec.ch

About the IEC
The International Electrotechnical Commission (IEC) is the leading global organization that prepares and publishes International Standards for all electrical, electronic and related technologies.

About IEC publications
The technical content of IEC publications is kept under constant review by the IEC. Please make sure that you have the latest edition, a corrigenda or an amendment might have been published.

IEC Catalogue - webstore.iec.ch/catalogue
The stand-alone application for consulting the entire bibliographical information on IEC International Standards, Technical Specifications, Technical Reports and other documents. Available for PC, Mac OS, Android Tablets and iPad.

IEC publications search - webstore.iec.ch/advsearchform
The advanced search enables to find IEC publications by a variety of criteria (reference number, text, technical committee,…). It also gives information on projects, replaced and withdrawn publications.

IEC Just Published - webstore.iec.ch/justpublished
Stay up to date on all new IEC publications. Just Published details all new publications released. Available online and also once a month by email.

Electropedia - www.electropedia.org
The world's leading online dictionary of electronic and electrical terms containing 21 000 terms and definitions in English and French, with equivalent terms in 16 additional languages. Also known as the International Electrotechnical Vocabulary (IEV) online.

IEC Glossary - std.iec.ch/glossary
67 000 electrotechnical terminology entries in English and French extracted from the Terms and Definitions clause of IEC publications issued since 2002. Some entries have been collected from earlier publications of IEC TC 37, 77, 86 and CISPR.

IEC Customer Service Centre - webstore.iec.ch/csc
If you wish to give us your feedback on this publication or need further assistance, please contact the Customer Service Centre: sales@iec.ch.

Documents
Document Sharing Hub

Full document details: IEC 61837-2 2018

IEC 61837-2

Edition 3.0 2018-05

INTERNATIONAL STANDARD

Surface mounted piezoelectric devices for frequency control and selection – Standard outlines and terminal lead connections – Part 2: Ceramic enclosures

INTERNATIONAL
ELECTROTECHNICAL
COMMISSION

ICS 31.140

ISBN 978-2-8322-5673-2

Warning! Make sure that you obtained this publication from an authorized distributor.

® Registered trademark of the International Electrotechnical Commission

Documents
Document Sharing Hub

Full document details: IEC 61837-2 2018

CONTENTS

FOREWORD 4
1 Scope 6
2 Normative references 6
3 Terms and definitions 6
4 Configuration of enclosures 6
5 Designation of types 6
6 Ceramic enclosure dimensions 7
7 Lead connections 7
8 Designation of ceramic enclosures 7
Sheet 1 9
Sheet 2 11
Sheet 3 13
Sheet 4 15
Sheet 5 17
Sheet 6 19
Sheet 7 21
Sheet 8 23
Sheet 9 25
Sheet 10 27
Sheet 11 29
Sheet 12 31
Sheet 13 33
Sheet 14 35
Sheet 15 37
Sheet 16 39
Sheet 17 41
Sheet 18 43
Sheet 19 45
Sheet 20 47
Sheet 21 49
Sheet 22 51
Sheet 23 53
Sheet 24 55
Sheet 25 57
Sheet 26 59
Sheet 27 61
Sheet 28 63
Sheet 29 65
Sheet 30 67
Sheet 31 69
Sheet 32 71
Sheet 33 73

AVA Documents
Document Sharing Hub

Full document details: IEC 61837-2 2018

Sheet 34 75
Sheet 35 77
Sheet 36 79
Sheet 37 81
Sheet 38 83
Sheet 39 85
Sheet 40 87
Sheet 41 89
Sheet 42 91
Sheet 43 93
Sheet 44 95
Sheet 45 97
Bibliography 99

Table 1 – Designation of ceramic enclosures 8

Documents
Document Sharing Hub

Full document details: IEC 61837-2 2018

INTERNATIONAL ELECTROTECHNICAL COMMISSION

SURFACE MOUNTED PIEZOELECTRIC DEVICES FOR FREQUENCY CONTROL AND SELECTION – STANDARD OUTLINES AND TERMINAL LEAD CONNECTIONS –

Part 2: Ceramic enclosures

FOREWORD

1) The International Electrotechnical Commission (IEC) is a worldwide organization for standardization comprising all national electrotechnical committees (IEC National Committees). The object of IEC is to promote international co-operation on all questions concerning standardization in the electrical and electronic fields. To this end and in addition to other activities, IEC publishes International Standards, Technical Specifications, Technical Reports, Publicly Available Specifications (PAS) and Guides (hereafter referred to as "IEC Publication(s)"). Their preparation is entrusted to technical committees; any IEC National Committee interested in the subject dealt with may participate in this preparatory work. International, governmental and non-governmental organizations liaising with the IEC also participate in this preparation. IEC collaborates closely with the International Organization for Standardization (ISO) in accordance with conditions determined by agreement between the two organizations.
2) The formal decisions or agreements of IEC on technical matters express, as nearly as possible, an international consensus of opinion on the relevant subjects since each technical committee has representation from all interested IEC National Committees.
3) IEC Publications have the form of recommendations for international use and are accepted by IEC National Committees in that sense. While all reasonable efforts are made to ensure that the technical content of IEC Publications is accurate, IEC cannot be held responsible for the way in which they are used or for any misinterpretation by any end user.
4) In order to promote international uniformity, IEC National Committees undertake to apply IEC Publications transparently to the maximum extent possible in their national and regional publications. Any divergence between any IEC Publication and the corresponding national or regional publication shall be clearly indicated in the latter.
5) IEC itself does not provide any attestation of conformity. Independent certification bodies provide conformity assessment services and, in some areas, access to IEC marks of conformity. IEC is not responsible for any services carried out by independent certification bodies.
6) All users should ensure that they have the latest edition of this publication.
7) No liability shall attach to IEC or its directors, employees, servants or agents including individual experts and members of its technical committees and IEC National Committees for any personal injury, property damage or other damage of any nature whatsoever, whether direct or indirect, or for costs (including legal fees) and expenses arising out of the publication, use of, or reliance upon, this IEC Publication or any other IEC Publications.
8) Attention is drawn to the Normative references cited in this publication. Use of the referenced publications is indispensable for the correct application of this publication.
9) Attention is drawn to the possibility that some of the elements of this IEC Publication may be the subject of patent rights. IEC shall not be held responsible for identifying any or all such patent rights.

International Standard IEC 61837-2 has been prepared by IEC technical committee 49: Piezoelectric, dielectric and electrostatic devices and associated materials for frequency control, selection and detection.

This third edition cancels and replaces the second edition published in 2011 and Amendment 1:2014. This edition constitutes a technical revision.

This edition includes the following significant technical changes with respect to the previous edition:

a) revision of the figures to match the notation of the drawings of IEC 61240:2016;
b) addition of 7 enclosures as follows: DCC-6/5032A, DCC-6/3225A, DCC-4/3215C, DCC-6/2016A, DCC-2/2012C, DCC-2/1610C, DCC-4/1210C.

As a result, this third edition contains a total of 45 enclosure types, which are listed in Table 1.

AVA Documents
Document Sharing Hub

Full document details: IEC 61837-2 2018

This International Standard is to be read in conjunction with IEC 61240:2016.

The text of this International Standard is based on the following documents:

CDV	Report on voting
49/1252/CDV	49/1276/RVC

Full information on the voting for the approval of this International Standard can be found in the report on voting indicated in the above table.

This document has been drafted in accordance with the ISO/IEC Directives, Part 2.

A list of all parts in the IEC 61837 series, published under the general title *Surface mounted piezoelectric devices for frequency control and selection – Standard outlines and terminal lead connections* , can be found on the IEC website.

The committee has decided that the contents of this document will remain unchanged until the stability date indicated on the IEC website under "http://webstore.iec.ch" in the data related to the specific document. At this date, the document will be

- reconfirmed,
- withdrawn,
- replaced by a revised edition, or
- amended.

A bilingual version of this publication may be issued at a later date.

Documents
Document Sharing Hub

Full document details: IEC 61837-2 2018

SURFACE MOUNTED PIEZOELECTRIC DEVICES FOR FREQUENCY CONTROL AND SELECTION – STANDARD OUTLINES AND TERMINAL LEAD CONNECTIONS –

Part 2: Ceramic enclosures

1 Scope

This part of IEC 61837 deals with standard outlines and terminal lead connections as they apply to surface-mounted devices (SMD) for frequency control and selection in ceramic enclosures, and is based on IEC 61240:2016.

2 Normative references

The following documents are referred to in the text in such a way that some or all of their content constitutes requirements of this document. For dated references, only the edition cited applies. For undated references, the latest edition of the referenced document (including any amendments) applies.

IEC 61240:2016, *Piezoelectric devices – Preparation of outline drawings of surface-mounted devices (SMD) for frequency control and selection – General rules*

3 Terms and definitions

No terms and definitions are listed in this document.

ISO and IEC maintain terminological databases for use in standardization at the following addresses:

- IEC Electropedia: available at http://www.electropedia.org/
- ISO Online browsing platform: available at http://www.iso.org/obp

4 Configuration of enclosures

The enclosures of the surface-mounted devices are made of ceramic materials with the terminals of deposited metal film (leadless type) based on a descriptive designation system for semiconductors – devices packages.

The configuration symbols are shown as follows:

- DCC (dual chip carrier);
- QCC (quad chip carrier).

5 Designation of types

The designation of types is shown on four parts as follows:

Documents
Document Sharing Hub

Full document details: IEC 61837-2 2018

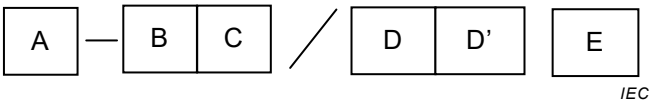

A: Configuration symbol of enclosures:
- DCC (dual chip carrier);
- QCC (quad chip carrier).

B: Structure of terminal leads: leadless type has no mark.

C: Number of terminal leads

D: Serial number of both figures

E: Arrangement of terminal land:

In the case of DCC types:
- A (arrangement in the width direction side or the width direction side and the corner);
- B (arrangement in the length direction side or the length direction side and the corner);
- C (arrangement in the corner only).

In the case of QCC types:
- A (arrangement in the side only);
- B (arrangement in the side and the corner).

6 Ceramic enclosure dimensions

The dimensions given in this document apply to all completed SMD-devices for frequency control and selection. Only those dimensions which meet the requirements of IEC 61240 are given.

7 Lead connections

Recommendations for the lead connections of all completed SMD-devices for frequency control and selection are given in the following individual sheets. Lead connections shall always be given in the detail specification.

8 Designation of ceramic enclosures

Table 1 is a list which includes all new enclosure types with their sheet numbers and brief descriptions. Old enclosure names are also listed as references.

Documents
Document Sharing Hub
Full document details: IEC 61837-2 2018

Table 1 – Designation of ceramic enclosures

No.	Type	Old type	Sheet No.	Description
1	QCC-18/1809A	QCC-18/01	Sheet 1	Ceramic, welded, eighteen leadless SMD outline
2	QCC-12/1407A		Sheet 2	Ceramic, welded, twelve leadless SMD outline
3	DCC-4/1206A	DCC-4/01	Sheet 3	Ceramic, four leadless SMD outline
4	DCC-2/1206A		Sheet 4	Ceramic, two leadless SMD outline
5	QCC-10/9272A		Sheet 5	Ceramic, welded, ten leadless SMD outline
6	DCC-4/9070A		Sheet 6	Ceramic, welded, four leadless SMD outline
7	DCC-4/8045B	DCC-04/02, 03	Sheet 7	Ceramic, welded, four leadless SMD outline
8	DCC-2/8045B		Sheet 8	Ceramic, welded, two leadless SMD outline
9	DCC-6/7834B		Sheet 9	Ceramic, welded, six leadless SMD outline
10	DCC-6/7050A		Sheet 10	Ceramic, welded, six leadless SMD outline
11	DCC-4/7050A	DCC-4/08	Sheet 11	Ceramic, welded, four leadless SMD outline
12	DCC-4/7050B	DCC-4/04, 05	Sheet 12	Ceramic, welded, four leadless SMD outline
13	QCC-10/7050A		Sheet 13	Ceramic, welded, ten leadless SMD outline
14	QCC-6/7050A	QCC-6/01, 02	Sheet 14	Ceramic, welded, six leadless SMD outline
15	DCC-6/6035A	DCC-4/06, 07	Sheet 15	Ceramic, welded, six leadless SMD outline
16	DCC-4/6035C		Sheet 16	Ceramic, welded, four leadless SMD outline
17	DCC-2/6035C		Sheet 17	Ceramic, welded, two leadless SMD outline
18	QCC-8/5050A	QCC-8/02	Sheet 18	Ceramic, welded, eight leadless SMD outline
19	QCC-12/5045A	QCC-12/02	Sheet 19	Ceramic, welded, twelve leadless SMD outline
20	QCC-8/5045A		Sheet 20	Ceramic, welded, eight leadless SMD outline
21	DCC-6/5032A		Sheet 21	Ceramic, welded, six leadless SMD outline
22	DCC-4/5032A		Sheet 22	Ceramic, welded, four leadless SMD outline
23	DCC-4/5032C		Sheet 23	Ceramic, welded, four leadless SMD outline
24	DCC-2/5032B	DCC-2/01	Sheet 24	Ceramic, welded, two leadless SMD outline
25	DCC-2/4818C		Sheet 25	Ceramic, welded, two leadless SMD outline
26	DCC-2/4115C		Sheet 26	Ceramic, welded, two leadless SMD outline
27	DCC-4/4025C	DCC-6/01	Sheet 27	Ceramic, welded, four leadless SMD outline
28	QCC-8/3838A		Sheet 28	Ceramic, welded, eight leadless SMD outline
29	DCC-6/3838A		Sheet 29	Ceramic, welded, six leadless SMD outline
30	DCC-6/3225A		Sheet 30	Ceramic, welded, six leadless SMD outline
31	DCC-4/3225C		Sheet 31	Ceramic, welded, four leadless SMD outline
32	DCC-4/3215C		Sheet 32	Ceramic, welded, four leadless SMD outline
33	DCC-2/3215C		Sheet 33	Ceramic, welded, two leadless SMD outline
34	QCC-8/3030B		Sheet 34	Ceramic, welded, eight leadless SMD outline
35	DCC-6/3030A		Sheet 35	Ceramic, welded, six leadless SMD outline
36	DCC-6/2520A		Sheet 36	Ceramic, welded, six leadless SMD outline
37	DCC-4/2520C/01,02,03		Sheet 37	Ceramic, welded, four leadless SMD outline
38	DCC-4/2020C		Sheet 38	Ceramic, welded, six leadless SMD outline
39	DCC-6/2016A		Sheet 39	Ceramic, welded, four leadless SMD outline
40	DCC-4/2016C/01,02,03		Sheet 40	Ceramic, welded, four leadless SMD outline
41	DCC-2/2012C		Sheet 41	Ceramic, welded, two leadless SMD outline
42	DCC-4/1612C/01,02		Sheet 42	Ceramic, welded, four leadless SMD outline
43	DCC-2/1612C		Sheet 43	Ceramic, welded, two leadless SMD outline
44	DCC-2/1610C		Sheet 44	Ceramic, welded, two leadless SMD outline
45	DCC-4/1210C		Sheet 45	Ceramic, welded, four leadless SMD outline

AVA Documents
Document Sharing Hub
Full document details: IEC 61837-2 2018

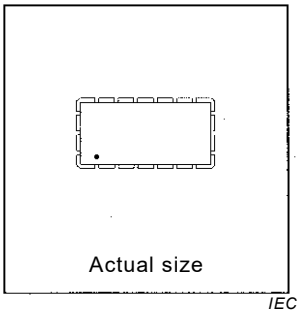

Ref.	Dimensions (mm)			Notes
	Min.	Nom.	Max.	
A	–	(18,0)	18,30	
B	–	(9,0)	9,30	
G	–	–	2,00	
K	0,50	–	1,10	
L_B	1,20	–	1,80	Note
e	–	2,54	–	
y	–	–	0,10	

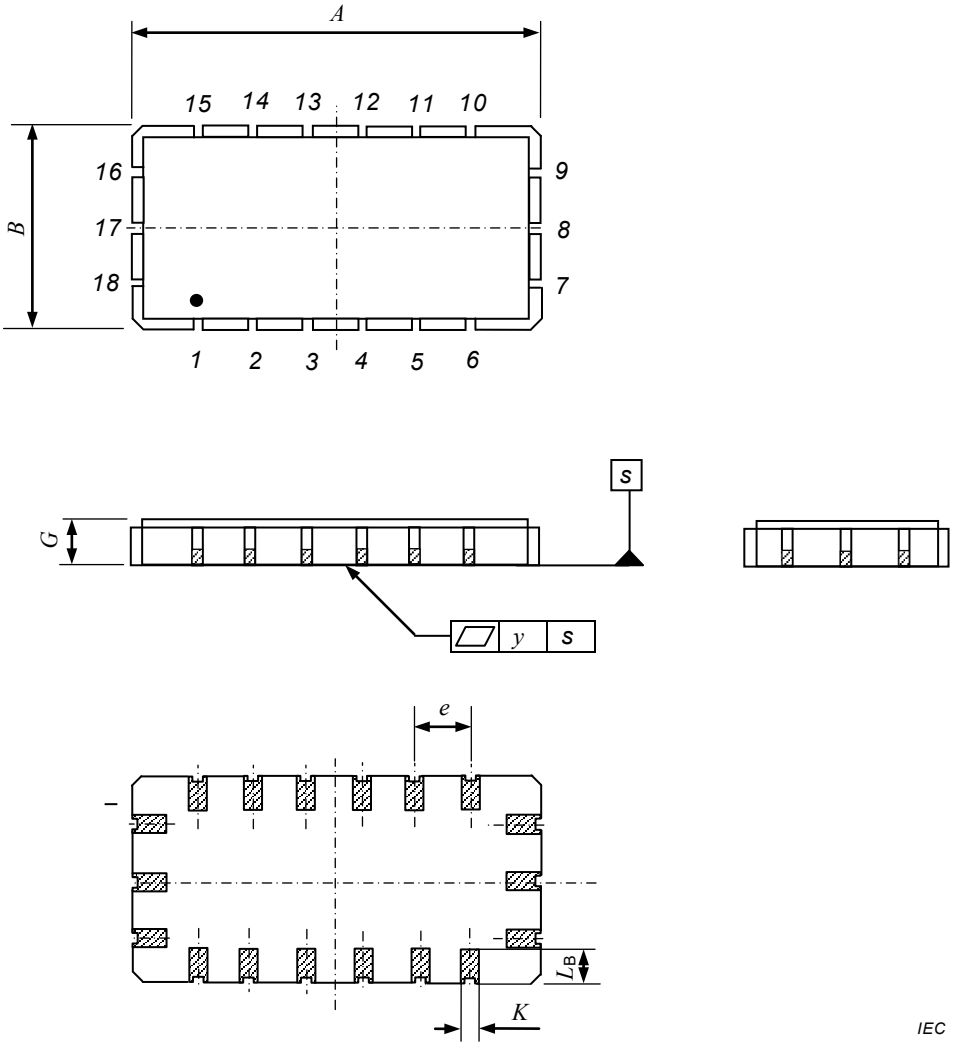

NOTE Dimension L_B max. can be increased to 2,10 mm for lead 1 to identity the orientation.

Ceramic, welded, eighteen leadless SMD outline – Type QCC-18/1809A	Scale 3: 1	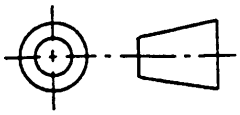
Sheet 1		

Documents
Document Sharing Hub
Full document details: IEC 61837-2 2018

Terminal land connections of Type QCC-18/1809A

No.	Crystal unit	Crystal oscillator	Crystal filter	SAW devices
1				Ground
2				Option
3				Option
4				Option
5				Option
6				Ground
7				Input/Output
8				Ground
9				Input/Output /Ground
10				Ground
11				Option
12				Option
13				Option
14				Option
15				Ground
16				Output/Input
17				Ground
18				Output/Input /Ground

Documents
Document Sharing Hub
Full document details: IEC 61837-2 2018

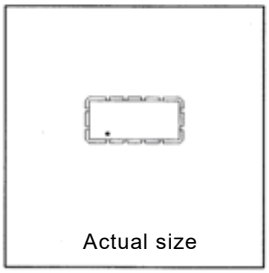

IEC

Ref.	Dimensions (mm)			Notes
	Min.	Nom.	Max.	
A	–	(14,0)	14,30	
B	–	(6,5)	6,80	
G	–	–	2,00	
K	0,50	–	1,10	
L_B	1,70	–	2,30	
e	–	2,54	–	
y	–	–	0,10	

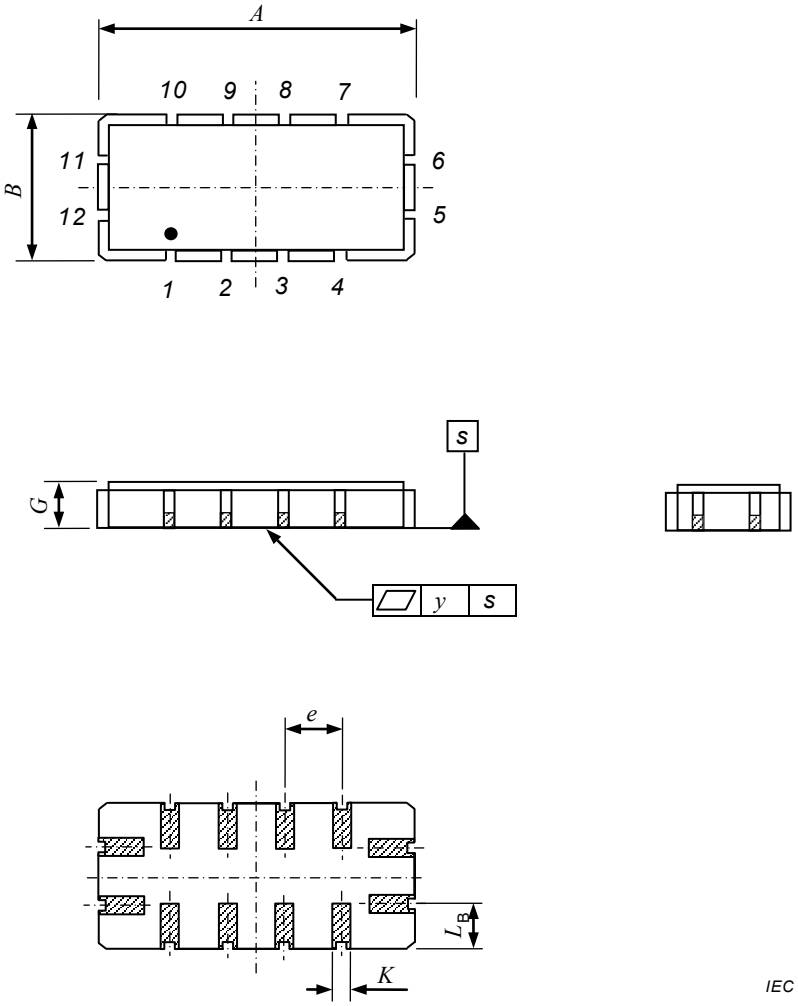

IEC

Ceramic, welded, twelve leadless SMD outline – Type QCC-12/1407A	Scale 3: 1	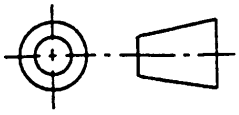
Sheet 2		

Documents
Document Sharing Hub
Full document details: IEC 61837-2 2018

Terminal land connections of Type QCC-12/1407A

No.	Crystal unit	Crystal oscillator	Crystal filter	SAW devices
1				Option
2				Option
3				Ground
4				Option
5				Output/Input
6				Output/Input /Ground
7				Option
8				Ground
9				Option
10				Option
11				Input/Output
12				Input/Output /Ground

Documents
Document Sharing Hub
Full document details: IEC 61837-2 2018

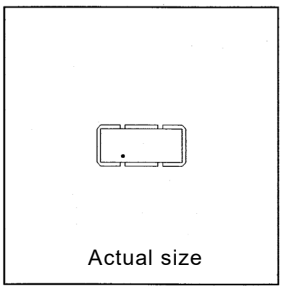

IEC

Ref.	Dimensions (mm)			Notes
	Min.	Nom.	Max.	
A	–	(12,0)	12,30	
B	–	(5,5)	5,80	
G	–	–	2,30	
K	1,80	–	2,20	
L_B	1,30	–	1,90	
e	–	5,08	–	
e_1	–	3,90	–	
y	–	–	0,10	

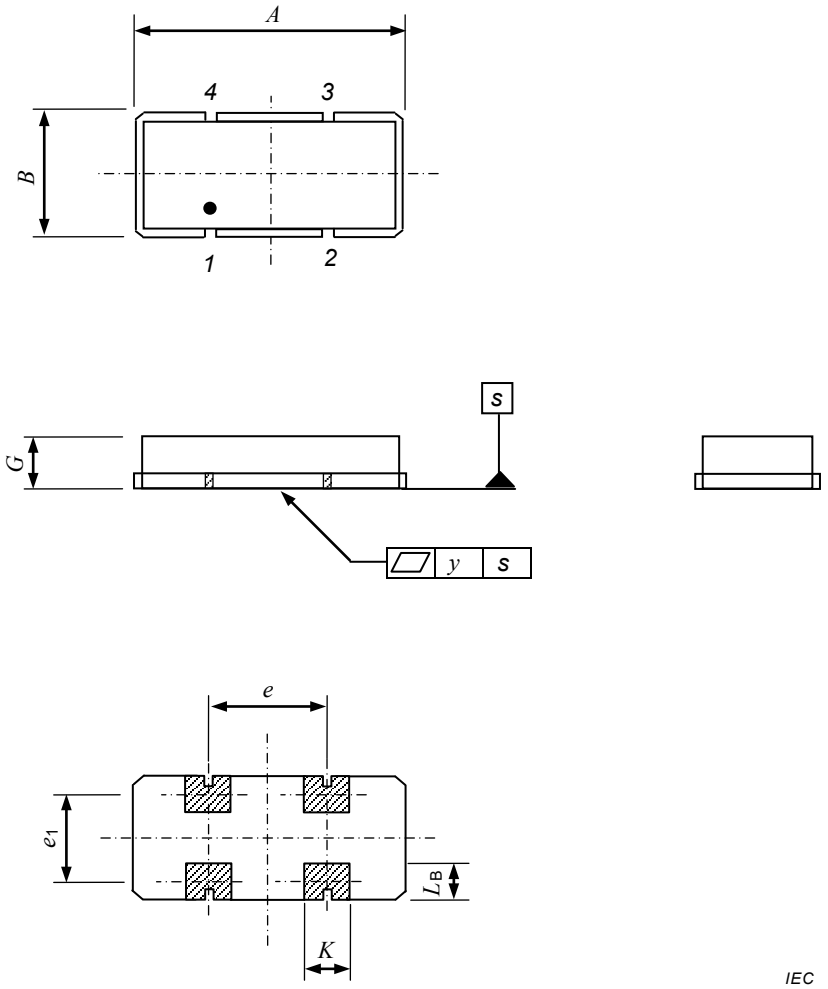

IEC

Ceramic, welded, four leadless SMD outline – Type DCC-4/1206A	Scale 3: 1	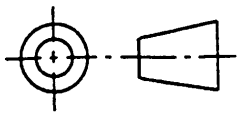
Sheet 3		

Documents
Document Sharing Hub
Full document details: IEC 61837-2 2018

Terminal land connections of Type DCC-4/1206A

No.	Crystal unit	Crystal oscillator	Crystal filter	SAW devices
1	Terminal 1	Control voltage		
2	NC	Ground		
3	Terminal 2	Output		
4	NC	DC supply		

Documents
Document Sharing Hub
Full document details: IEC 61837-2 2018

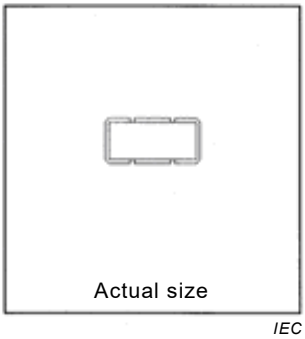

Ref.	Dimensions (mm)			Notes
	Min.	Nom.	Max.	
A	–	(12,0)	12,30	
B	–	(5,5)	5,80	
G	–	–	2,70	
K	1,60	–	2,20	
L_B	5,20	–	5,80	
e	–	5,08	–	
y	–	–	0,10	

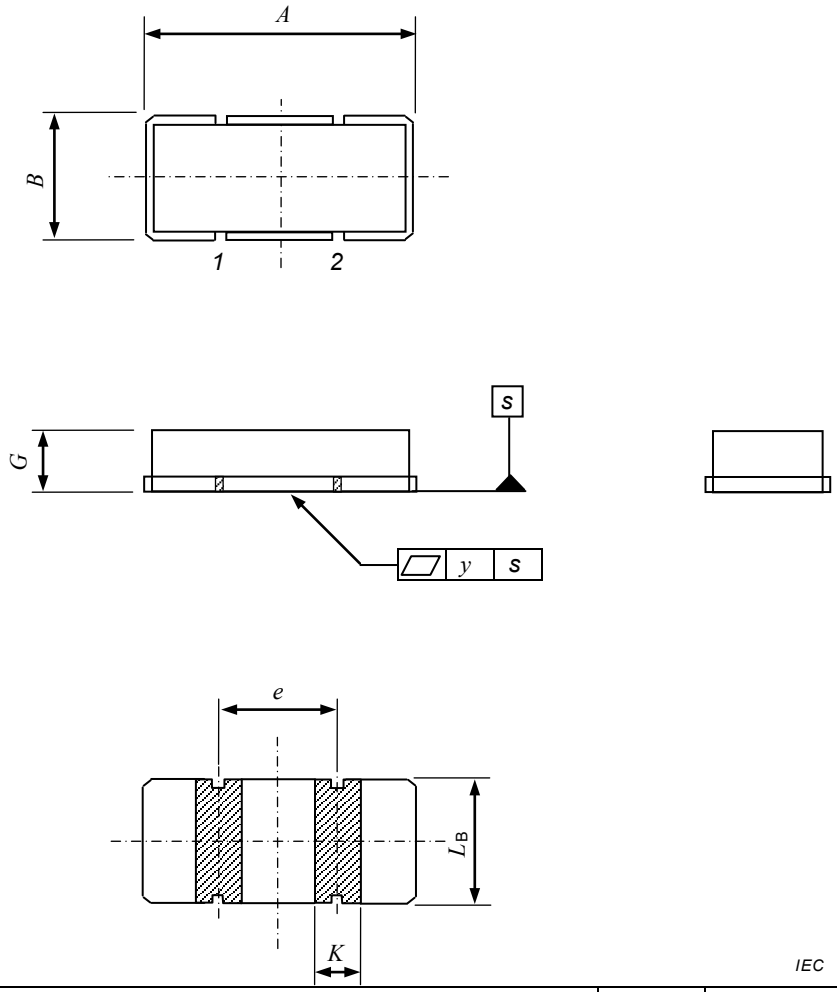

Ceramic, welded, two leadless SMD outline – Type DCC-2/1206A	Scale 3: 1	
Sheet 4		

Documents
Document Sharing Hub
Full document details: IEC 61837-2 2018

Terminal land connections of Type DCC-2/1206A

No.	Crystal unit	Crystal oscillator	Crystal filter	SAW devices
1	Terminal 1			
2	Terminal 2			

Documents
Document Sharing Hub

Full document details: IEC 61837-2 2018

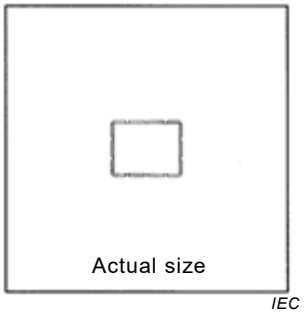

Ref.	Dimensions (mm)			Notes
	Min.	Nom.	Max.	
A	–	(9,2)	9,50	
B	–	(7,2)	7,50	
G	–	–	2,00	
K	0,60	–	1,20	
L_B	0,80	–	1,40	Note
e	–	2,54	–	
y	–	–	0,10	

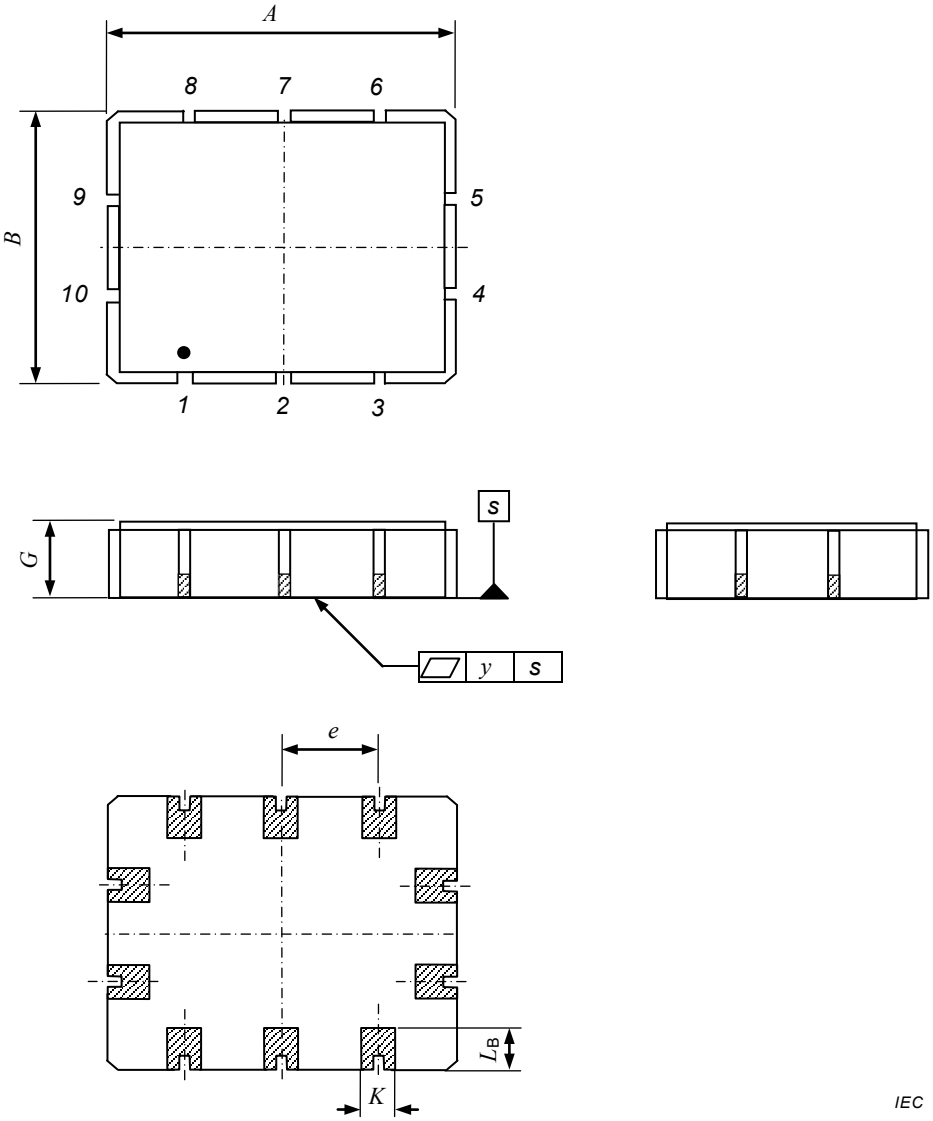

NOTE Dimension L_B max. can be increased to 2,00 mm for lead 1 to identify the orientation.

Ceramic, welded, ten leadless SMD outline – Type QCC-10/9272A	Scale 5: 1	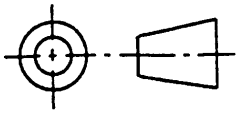
Sheet 5		

Documents
Document Sharing Hub
Full document details: IEC 61837-2 2018

Terminal land connections of Type QCC-10/9272A

No.	Crystal unit	Crystal oscillator	Crystal filter	SAW devices
1				Input/Output /Ground
2				Input/Output
3				Ground
4				Ground
5				Ground
6				Output/Input /Ground
7				Output/Input
8				Option
9				Ground
10				Ground

Documents
Document Sharing Hub
Full document details: IEC 61837-2 2018

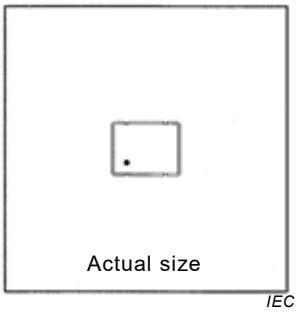

Ref.	Dimensions (mm)			Notes
	Min.	Nom.	Max.	
A	–	(9,0)	9,30	
B	–	(7,0)	7,30	
G	–	–	2,00	
K	1,10	–	1,70	
L_B	0,90	–	1,50	
e	–	5,08	–	
e_1	–	5,80	–	
y	–	–	0,10	

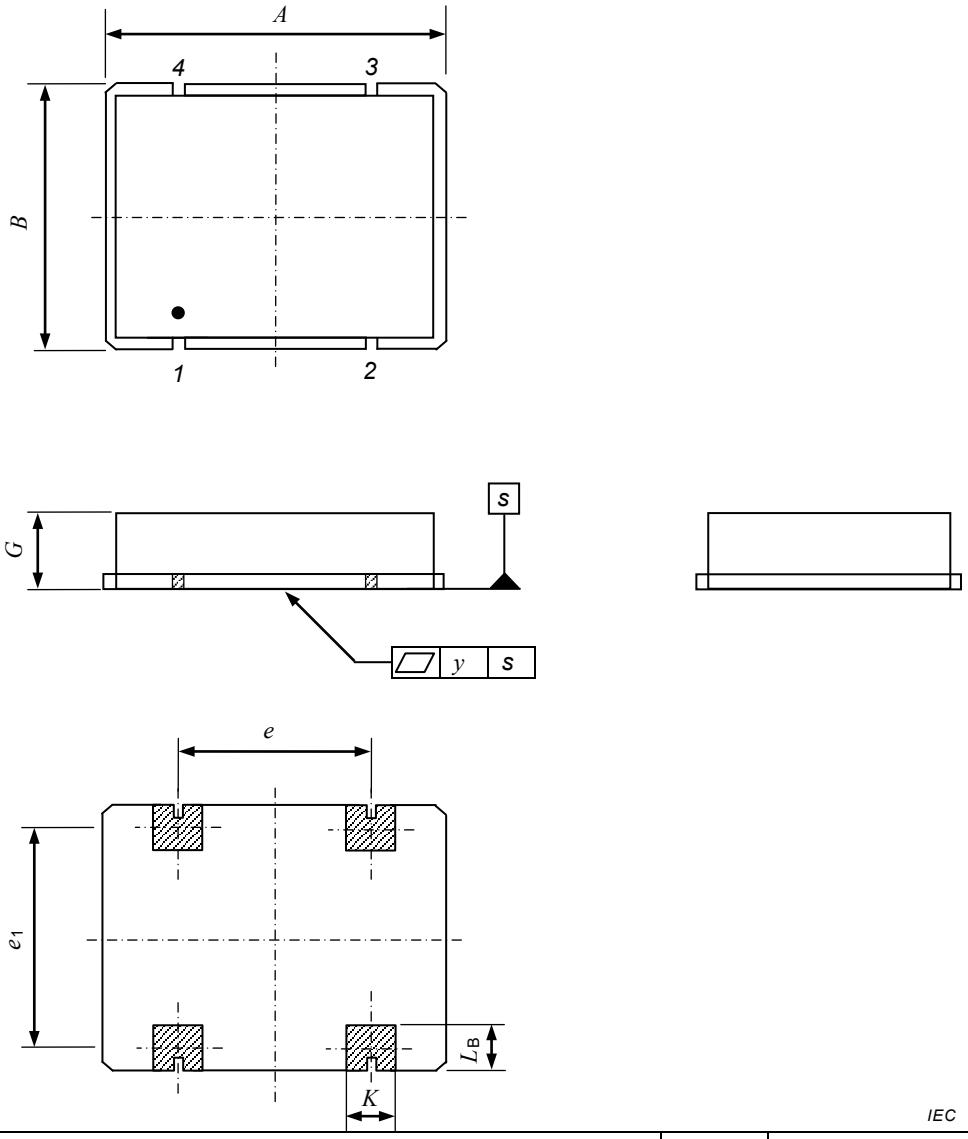

Ceramic, welded, four leadless SMD outline –

Type DCC-4/9070A

Scale

5: 1

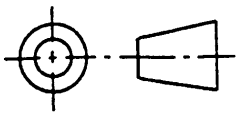

Sheet 6

Documents
Document Sharing Hub

Full document details: IEC 61837-2 2018

Terminal land connections of Type DCC-4/9070A

No.	Crystal unit	Crystal oscillator	Crystal filter	SAW devices
1		Control voltage		
2		Ground		
3		Output		
4		DC supply		

Documents
Document Sharing Hub
Full document details: IEC 61837-2 2018

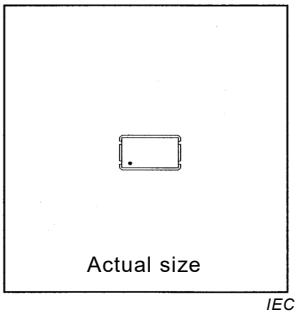

Ref.	Dimensions (mm)			Notes
	Min.	Nom.	Max.	
A	–	(8,0)	8,30	
B	–	(4,5)	4,80	
G	–	–	2,00	
K	0,70	–	1,30	
L_B	0,80	–	1,40	
e	–	2,54	–	
e_1	–	6,90	–	
y	–	–	0,10	

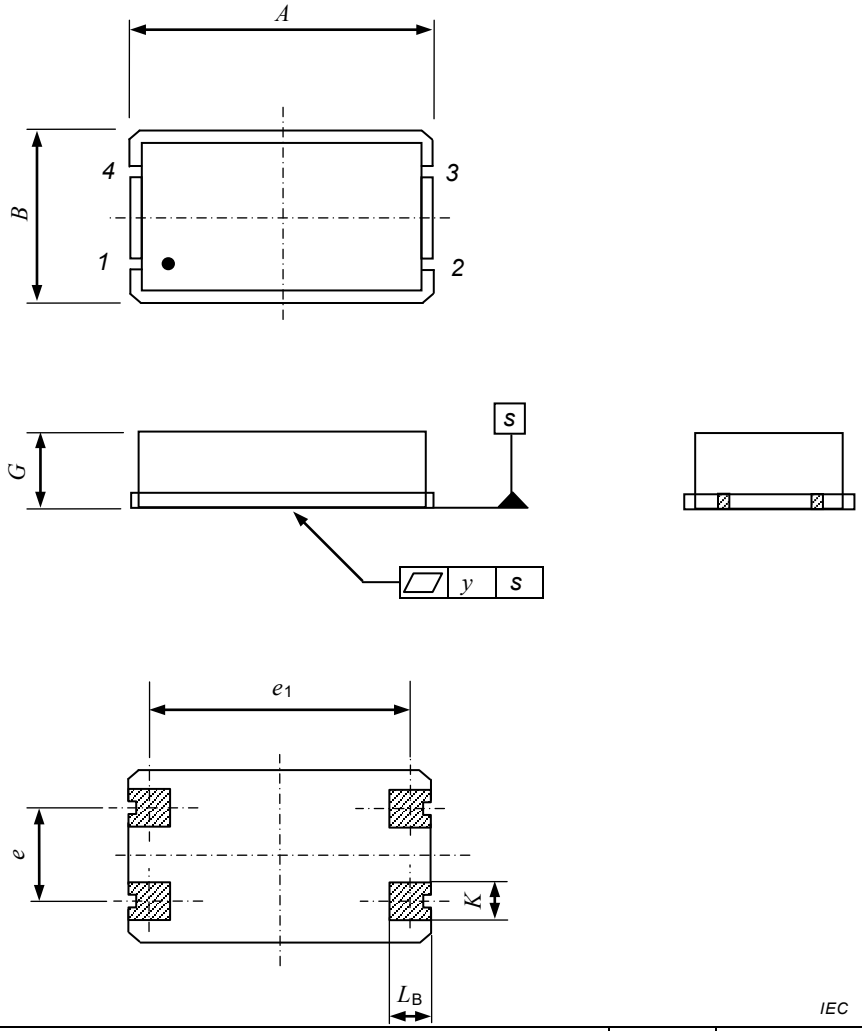

Ceramic, welded, four leadless SMD outline – Type DCC-4/8045B	Scale 5: 1	
Sheet 7		

Documents
Document Sharing Hub
Full document details: IEC 61837-2 2018

Terminal land connections of Type DCC-4/8045B

No.	Crystal unit	Crystal oscillator	Crystal filter	SAW devices
1	Terminal 1	Control voltage		
2	Option	Ground		
3	Terminal 2	Output		
4	Option	DC supply		

Documents
Document Sharing Hub
Full document details: IEC 61837-2 2018

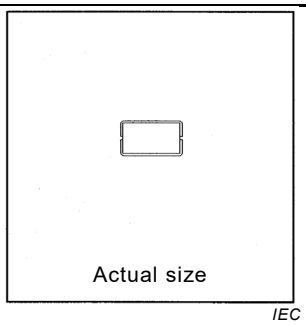

Ref.	Dimensions (mm)			Notes
	Min.	Nom.	Max	
A	–	(8,0)	8,30	
B	–	(4,5)	4,80	
G	–	–	1,60	
K	1,60	–	2,20	
L_B	0,70	–	1,30	
e_1	–	7,00	–	
y	–	–	0,10	

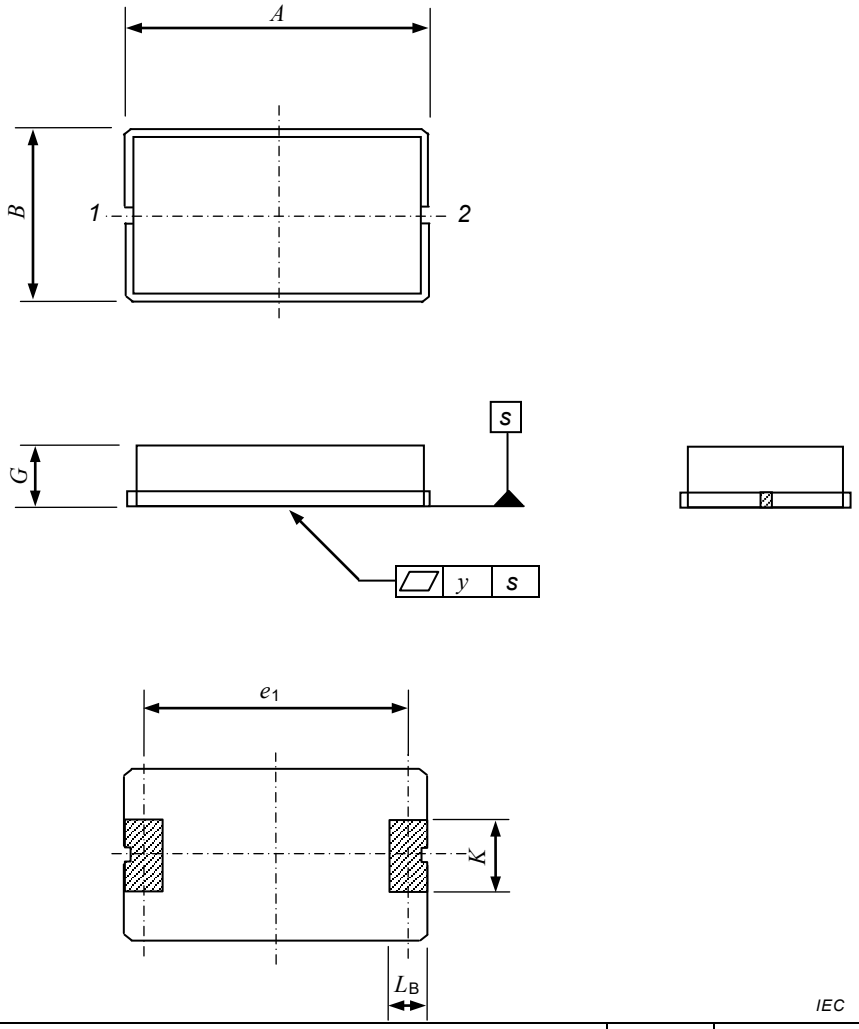

Ceramic, welded, two leadless SMD outline – Type DCC-2/8045B	Scale 5: 1	
Sheet 8		

Documents
Document Sharing Hub
Full document details: IEC 61837-2 2018

Terminal land connections of Type DCC-2/8045B

No.	Crystal unit	Crystal oscillator	Crystal filter	SAW devices
1	Terminal 1			
2	Terminal 2			

Documents
Document Sharing Hub
Full document details: IEC 61837-2 2018

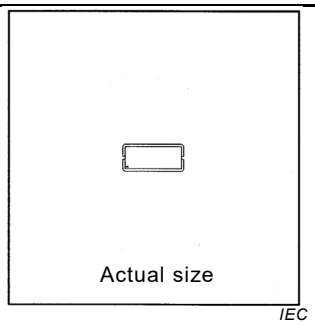

Ref.	Dimensions (mm)			Notes
	Min.	Nom.	Max.	
A	–	(7,8)	8,10	
B	–	(3,4)	3,70	
G	–	–	1,20	
K_1	0,70	–	1,30	
K_2	0,80	–	1,40	
L_{B1}	0,30	–	0,90	
L_{B2}	1,10	–	1,70	
e_1	–	6,70	–	
e_2	–	1,40	–	
y	–	–	0,10	

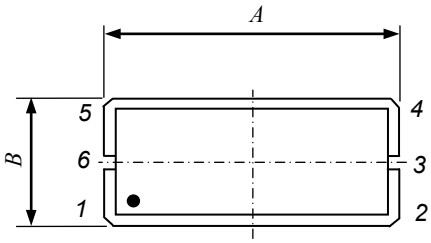

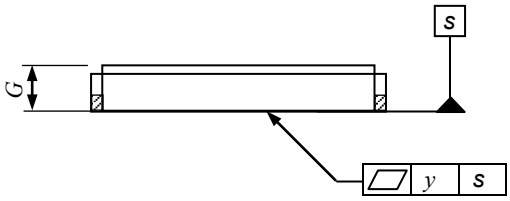

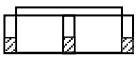

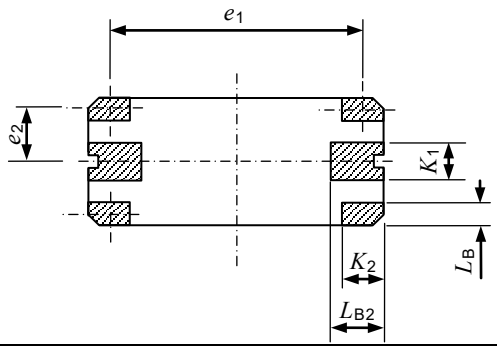

Ceramic, welded, six leadless SMD outline – Type DCC-6/7834B	Scale 5: 1	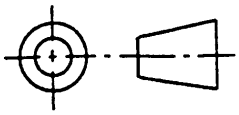
Sheet 9		

Documents
Document Sharing Hub
Full document details: IEC 61837-2 2018

Terminal land connections of Type DCC-6/7834B

No.	Crystal unit	Crystal oscillator	Crystal filter	SAW devices
1	Option			
2	Option			
3	Terminal 1			
4	Option			
5	Option			
6	Terminal 2			

Documents
Document Sharing Hub
Full document details: IEC 61837-2 2018

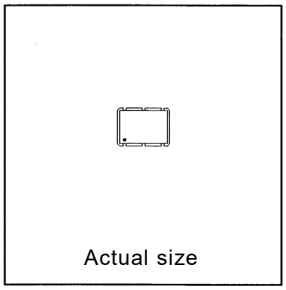

IEC

Ref.	Dimensions (mm)			Notes
	Min.	Nom.	Max.	
A	–	(7,0)	7,30	
B	–	(5,0)	5,30	
G	–	–	2,00	
K	1,10	–	1,70	
L_B	0,80	–	1,40	
e	–	2,54	–	
e_1	–	3,90	–	
y	–	–	0,10	

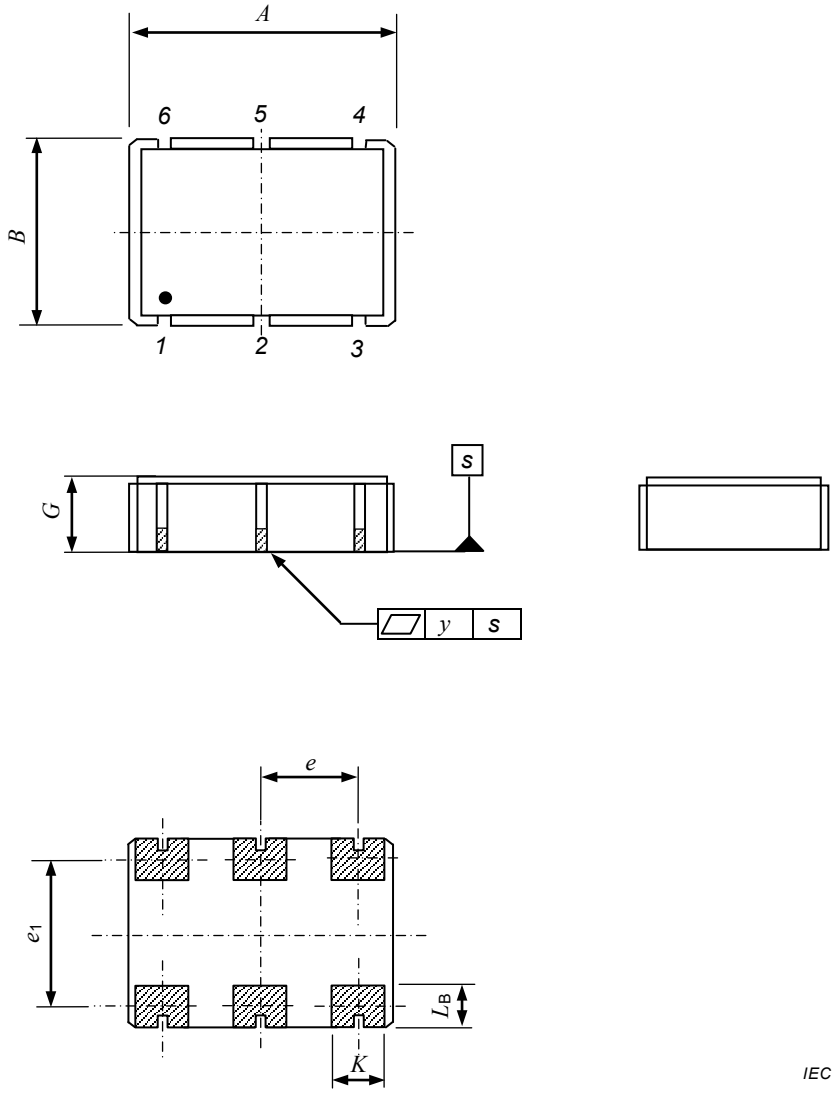

IEC

Ceramic, welded, six leadless SMD outline –

Type DCC-6/7050A

Scale

5: 1

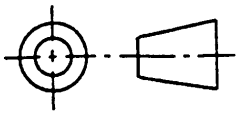

Sheet 10

Documents
Document Sharing Hub

Full document details: IEC 61837-2 2018

Terminal land connections of Type DCC-6/7050A

No.	Crystal unit	Crystal oscillator	Crystal filter	SAW devices
1		Output enable		
2		NC		
3		Ground		
4		Output		
5		Output		
6		DC supply		

Documents
Document Sharing Hub
Full document details: IEC 61837-2 2018

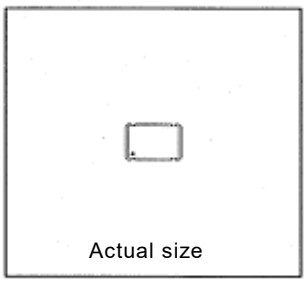

Ref.	Dimensions (mm)			Notes
	Min.	Nom.	Max.	
A	–	(7,0)	7,30	
B	–	(5,0)	5,30	
G	–	–	1,90	
K	1,10	–	1,70	
L_B	0,90	–	1,50	
e	–	5,08	–	
e_1	–	3,80	–	
y	–	–	0,10	

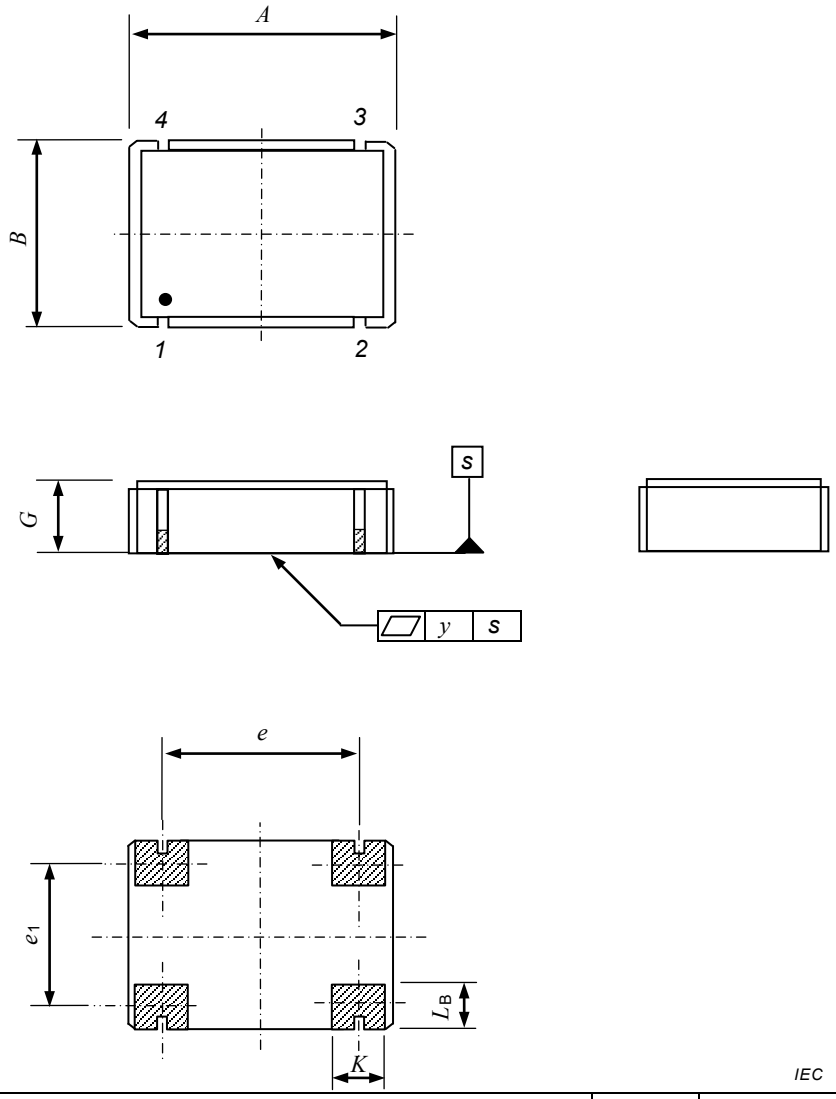

Ceramic, welded, four leadless SMD outline – Type DCC-4/7050A	Scale 5: 1	
Sheet 11		

Documents
Document Sharing Hub
Full document details: IEC 61837-2 2018

Terminal land connections of Type DCC-4/7050A

No.	Crystal unit	Crystal oscillator	Crystal filter	SAW devices
1		Control voltage		
2		Ground		
3		Output		
4		DC supply		

Documents
Document Sharing Hub
Full document details: IEC 61837-2 2018