IEC 61837-2

Edition 3.1 2020-09
CONSOLIDATED VERSION

INTERNATIONAL STANDARD

NORME INTERNATIONALE

colour inside

Surface mounted piezoelectric devices for frequency control and selection – Standard outlines and terminal lead connections – Part 2: Ceramic enclosures

Dispositifs piézoélectriques à montage en surface pour la commande et le choix de la fréquence – Encombrements normalisés et connexions des sorties – Partie 2: Enveloppes en céramique

IEC 61837-2:2018-05+AMD1:2020-09 CSV (en-fr)

Documents
Document Sharing Hub
Full document details: IEC 61837-2-2020

THIS PUBLICATION IS COPYRIGHT PROTECTED
Copyright © 2020 IEC, Geneva, Switzerland

All rights reserved. Unless otherwise specified, no part of this publication may be reproduced or utilized in any form or by any means, electronic or mechanical, including photocopying and microfilm, without permission in writing from either IEC or IEC's member National Committee in the country of the requester. If you have any questions about IEC copyright or have an enquiry about obtaining additional rights to this publication, please contact the address below or your local IEC member National Committee for further information.

Droits de reproduction réservés. Sauf indication contraire, aucune partie de cette publication ne peut être reproduite ni utilisée sous quelque forme que ce soit et par aucun procédé, électronique ou mécanique, y compris la photocopie et les microfilms, sans l'accord écrit de l'IEC ou du Comité national de l'IEC du pays du demandeur. Si vous avez des questions sur le copyright de l'IEC ou si vous désirez obtenir des droits supplémentaires sur cette publication, utilisez les coordonnées ci-après ou contactez le Comité national de l'IEC de votre pays de résidence.

IEC Central Office
3, rue de Varembé
CH-1211 Geneva 20
Switzerland

Tel.: +41 22 919 02 11
info@iec.ch
www.iec.ch

About the IEC
The International Electrotechnical Commission (IEC) is the leading global organization that prepares and publishes International Standards for all electrical, electronic and related technologies.

About IEC publications
The technical content of IEC publications is kept under constant review by the IEC. Please make sure that you have the latest edition, a corrigendum or an amendment might have been published.

IEC publications search - webstore.iec.ch/advsearchform
The advanced search enables to find IEC publications by a variety of criteria (reference number, text, technical committee, …). It also gives information on projects, replaced and withdrawn publications.

IEC Just Published - webstore.iec.ch/justpublished
Stay up to date on all new IEC publications. Just Published details all new publications released. Available online and once a month by email.

IEC Customer Service Centre - webstore.iec.ch/csc
If you wish to give us your feedback on this publication or need further assistance, please contact the Customer Service Centre: sales@iec.ch.

IEC online collection - oc.iec.ch
Discover our powerful search engine and read freely all the publications previews. With a subscription you will always have access to up to date content tailored to your needs.

Electropedia - www.electropedia.org
The world's leading online dictionary on electrotechnology, containing more than 22 000 terminological entries in English and French, with equivalent terms in 18 additional languages. Also known as the International Electrotechnical Vocabulary (IEV) online.

A propos de l'IEC
La Commission Electrotechnique Internationale (IEC) est la première organisation mondiale qui élabore et publie des Normes internationales pour tout ce qui a trait à l'électricité, à l'électronique et aux technologies apparentées.

A propos des publications IEC
Le contenu technique des publications IEC est constamment revu. Veuillez vous assurer que vous possédez l'édition la plus récente, un corrigendum ou amendement peut avoir été publié.

Recherche de publications IEC - webstore.iec.ch/advsearchform
La recherche avancée permet de trouver des publications IEC en utilisant différents critères (numéro de référence, texte, comité d'études, …). Elle donne aussi des informations sur les projets et les publications remplacées ou retirées.

IEC Just Published - webstore.iec.ch/justpublished
Restez informé sur les nouvelles publications IEC. Just Published détaille les nouvelles publications parues. Disponible en ligne et une fois par mois par email.

Service Clients - webstore.iec.ch/csc
Si vous désirez nous donner des commentaires sur cette publication ou si vous avez des questions contactez-nous: sales@iec.ch.

IEC online collection - oc.iec.ch
Découvrez notre puissant moteur de recherche et consultez gratuitement tous les aperçus des publications. Avec un abonnement, vous aurez toujours accès à un contenu à jour adapté à vos besoins.

Electropedia - www.electropedia.org
Le premier dictionnaire d'électrotechnologie en ligne au monde, avec plus de 22 000 articles terminologiques en anglais et en français, ainsi que les termes équivalents dans 16 langues additionnelles. Egalement appelé Vocabulaire Electrotechnique International (IEV) en ligne.

AVA Documents
Document Sharing Hub

Full document details: IEC 61837-2-2020

IEC 61837-2

Edition 3.1 2020-09
CONSOLIDATED VERSION

INTERNATIONAL STANDARD

NORME INTERNATIONALE

colour inside

Surface mounted piezoelectric devices for frequency control and selection – Standard outlines and terminal lead connections – Part 2: Ceramic enclosures

Dispositifs piézoélectriques à montage en surface pour la commande et le choix de la fréquence – Encombrements normalisés et connexions des sorties – Partie 2: Enveloppes en céramique

INTERNATIONAL
ELECTROTECHNICAL
COMMISSION

COMMISSION
ELECTROTECHNIQUE
INTERNATIONALE

ICS 31.140

ISBN 978-2-8322-9295-2

Warning! Make sure that you obtained this publication from an authorized distributor.
Attention! Veuillez vous assurer que vous avez obtenu cette publication via un distributeur agréé.

AVA Documents
Document Sharing Hub

® Registered trademark of the International Electrotechnical Commission
Marque déposée de la Commission Electrotechnique Internationale

Full document details: IEC 61837-2-2020

Documents
Document Sharing Hub

Full document details: IEC 61837-2-2020

IEC 61837-2

Edition 3.1 2020-09
CONSOLIDATED VERSION

REDLINE VERSION

VERSION REDLINE

colour inside

Surface mounted piezoelectric devices for frequency control and selection – Standard outlines and terminal lead connections – Part 2: Ceramic enclosures

Dispositifs piézoélectriques à montage en surface pour la commande et le choix de la fréquence – Encombrements normalisés et connexions des sorties – Partie 2: Enveloppes en céramique

IEC 61837-2:2018-05+AMD1:2020-09 CSV (en-fr)

Documents
Document Sharing Hub

Full document details: IEC 61837-2-2020

CONTENTS

FOREWORD 4
1 Scope 6
2 Normative references 6
3 Terms and definitions 6
4 Configuration of enclosures 6
5 Designation of types 6
6 Ceramic enclosure dimensions 7
7 Lead connections 7
8 Designation of ceramic enclosures 7
Sheet 1 10
Sheet 2 12
Sheet 3 14
Sheet 4 16
Sheet 5 18
Sheet 6 20
Sheet 7 22
Sheet 8 24
Sheet 9 26
Sheet 10 30
Sheet 11 34
Sheet 12 36
Sheet 13 38
Sheet 14 40
Sheet 15 42
Sheet 16 44
Sheet 17 46
Sheet 18 48
Sheet 19 50
Sheet 20 52
Sheet 21 56
Sheet 22 60
Sheet 23 62
Sheet 24 64
Sheet 25 66
Sheet 26 68
Sheet 27 70
Sheet 28 72
Sheet 29 74
Sheet 30 78
Sheet 31 82
Sheet 32 84

AVA Documents
Document Sharing Hub

Full document details: IEC 61837-2-2020

Sheet 33 86
Sheet 34 88
Sheet 35 90
Sheet 36 92
Sheet 37 94
Sheet 38 96
Sheet 39 98
Sheet 40 102
Sheet 41 104
Sheet 42 108
Sheet 43 110
Sheet 44 112
Sheet 45 114
Sheet 46 116
Sheet 47 118
Bibliography 120

Table 1 – Designation of ceramic enclosures 8

Documents
Document Sharing Hub

Full document details: IEC 61837-2-2020

INTERNATIONAL ELECTROTECHNICAL COMMISSION

SURFACE MOUNTED PIEZOELECTRIC DEVICES FOR FREQUENCY CONTROL AND SELECTION – STANDARD OUTLINES AND TERMINAL LEAD CONNECTIONS –

Part 2: Ceramic enclosures

FOREWORD

1) The International Electrotechnical Commission (IEC) is a worldwide organization for standardization comprising all national electrotechnical committees (IEC National Committees). The object of IEC is to promote international co-operation on all questions concerning standardization in the electrical and electronic fields. To this end and in addition to other activities, IEC publishes International Standards, Technical Specifications, Technical Reports, Publicly Available Specifications (PAS) and Guides (hereafter referred to as "IEC Publication(s)"). Their preparation is entrusted to technical committees; any IEC National Committee interested in the subject dealt with may participate in this preparatory work. International, governmental and non-governmental organizations liaising with the IEC also participate in this preparation. IEC collaborates closely with the International Organization for Standardization (ISO) in accordance with conditions determined by agreement between the two organizations.
2) The formal decisions or agreements of IEC on technical matters express, as nearly as possible, an international consensus of opinion on the relevant subjects since each technical committee has representation from all interested IEC National Committees.
3) IEC Publications have the form of recommendations for international use and are accepted by IEC National Committees in that sense. While all reasonable efforts are made to ensure that the technical content of IEC Publications is accurate, IEC cannot be held responsible for the way in which they are used or for any misinterpretation by any end user.
4) In order to promote international uniformity, IEC National Committees undertake to apply IEC Publications transparently to the maximum extent possible in their national and regional publications. Any divergence between any IEC Publication and the corresponding national or regional publication shall be clearly indicated in the latter.
5) IEC itself does not provide any attestation of conformity. Independent certification bodies provide conformity assessment services and, in some areas, access to IEC marks of conformity. IEC is not responsible for any services carried out by independent certification bodies.
6) All users should ensure that they have the latest edition of this publication.
7) No liability shall attach to IEC or its directors, employees, servants or agents including individual experts and members of its technical committees and IEC National Committees for any personal injury, property damage or other damage of any nature whatsoever, whether direct or indirect, or for costs (including legal fees) and expenses arising out of the publication, use of, or reliance upon, this IEC Publication or any other IEC Publications.
8) Attention is drawn to the Normative references cited in this publication. Use of the referenced publications is indispensable for the correct application of this publication.
9) Attention is drawn to the possibility that some of the elements of this IEC Publication may be the subject of patent rights. IEC shall not be held responsible for identifying any or all such patent rights.

This consolidated version of the official IEC Standard and its amendment has been prepared for user convenience.

IEC 61837-2 edition 3.1 contains the third edition (2018-05) [documents 49/1252/CDV and 49/1276/RVC] and its amendment 1 (2020-09) [documents 49/1338/CDV and 49/1347/RVC].

In this Redline version, a vertical line in the margin shows where the technical content is modified by amendment 1. Additions are in green text, deletions are in strikethrough red text. A separate Final version with all changes accepted is available in this publication.

AVA Documents
Document Sharing Hub

Full document details: IEC 61837-2-2020

International Standard IEC 61837-2 has been prepared by IEC technical committee 49: Piezoelectric, dielectric and electrostatic devices and associated materials for frequency control, selection and detection.

This third edition constitutes a technical revision.

This edition includes the following significant technical changes with respect to the previous edition:

a) revision of the figures to match the notation of the drawings of IEC 61240:2016;

b) addition of 7 enclosures as follows: DCC-6/5032A, DCC-6/3225A, DCC-4/3215C, DCC-6/2016A, DCC-2/2012C, DCC-2/1610C, DCC-4/1210C.

As a result, this third edition contains a total of 45 enclosure types, which are listed in Table 1.

This International Standard is to be read in conjunction with IEC 61240:2016.

This document has been drafted in accordance with the ISO/IEC Directives, Part 2.

A list of all parts in the IEC 61837 series, published under the general title *Surface mounted piezoelectric devices for frequency control and selection – Standard outlines and terminal lead connections* , can be found on the IEC website.

The committee has decided that the contents of the base publication and its amendment will remain unchanged until the stability date indicated on the IEC web site under "http://webstore.iec.ch" in the data related to the specific publication. At this date, the publication will be

- reconfirmed,
- withdrawn,
- replaced by a revised edition, or
- amended.

IMPORTANT – The 'colour inside' logo on the cover page of this publication indicates that it contains colours which are considered to be useful for the correct understanding of its contents. Users should therefore print this document using a colour printer.

Documents
Document Sharing Hub

Full document details: IEC 61837-2-2020

SURFACE MOUNTED PIEZOELECTRIC DEVICES FOR FREQUENCY CONTROL AND SELECTION – STANDARD OUTLINES AND TERMINAL LEAD CONNECTIONS –

Part 2: Ceramic enclosures

1 Scope

This part of IEC 61837 deals with standard outlines and terminal lead connections as they apply to surface-mounted devices (SMD) for frequency control and selection in ceramic enclosures, and is based on IEC 61240:2016.

2 Normative references

The following documents are referred to in the text in such a way that some or all of their content constitutes requirements of this document. For dated references, only the edition cited applies. For undated references, the latest edition of the referenced document (including any amendments) applies.

IEC 61240:2016, *Piezoelectric devices – Preparation of outline drawings of surface-mounted devices (SMD) for frequency control and selection – General rules*

3 Terms and definitions

No terms and definitions are listed in this document.

ISO and IEC maintain terminological databases for use in standardization at the following addresses:

- IEC Electropedia: available at http://www.electropedia.org/
- ISO Online browsing platform: available at http://www.iso.org/obp

4 Configuration of enclosures

The enclosures of the surface-mounted devices are made of ceramic materials with the terminals of deposited metal film (leadless type) based on a descriptive designation system for semiconductors – devices packages.

The configuration symbols are shown as follows:

- DCC (dual chip carrier);
- QCC (quad chip carrier).

5 Designation of types

The designation of types is shown on four parts as follows:

Documents
Document Sharing Hub
Full document details: IEC 61837-2-2020

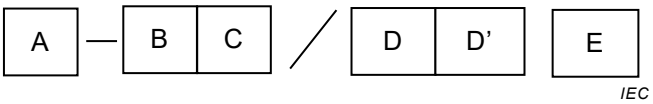

A: Configuration symbol of enclosures:
- DCC (dual chip carrier);
- QCC (quad chip carrier).

B: Structure of terminal leads: leadless type has no mark.

C: Number of terminal leads

D: Serial number of both figures

E: Arrangement of terminal land:

In the case of DCC types:
- A (arrangement in the width direction side or the width direction side and the corner);
- B (arrangement in the length direction side or the length direction side and the corner);
- C (arrangement in the corner only).

In the case of QCC types:
- A (arrangement in the side only);
- B (arrangement in the side and the corner).

6 Ceramic enclosure dimensions

The dimensions given in this document apply to all completed SMD-devices for frequency control and selection. Only those dimensions which meet the requirements of IEC 61240 are given.

7 Lead connections

Recommendations for the lead connections of all completed SMD-devices for frequency control and selection are given in the following individual sheets. Lead connections shall always be given in the detail specification.

8 Designation of ceramic enclosures

Table 1 is a list which includes all new enclosure types with their sheet numbers and brief descriptions. Old enclosure names are also listed as references.

Documents
Document Sharing Hub
Full document details: IEC 61837-2-2020

Table 1 – Designation of ceramic enclosures

No.	Type	Old type	Sheet No.	Description
1	QCC-18/1809A	QCC-18/01	Sheet 1	Ceramic, welded, eighteen leadless SMD outline
2	QCC-12/1407A		Sheet 2	Ceramic, welded, twelve leadless SMD outline
3	DCC-4/1206A	DCC-4/01	Sheet 3	Ceramic, four leadless SMD outline
4	DCC-2/1206A		Sheet 4	Ceramic, two leadless SMD outline
5	QCC-10/9272A		Sheet 5	Ceramic, welded, ten leadless SMD outline
6	DCC-4/9070A		Sheet 6	Ceramic, welded, four leadless SMD outline
7	DCC-4/8045B	DCC-04/02, 03	Sheet 7	Ceramic, welded, four leadless SMD outline
8	DCC-2/8045B		Sheet 8	Ceramic, welded, two leadless SMD outline
9	DCC-6/7834B		Sheet 9	Ceramic, welded, six leadless SMD outline
10	DCC-6/7050A		Sheet 10	Ceramic, welded, six leadless SMD outline
11	DCC-4/7050A	DCC-4/08	Sheet 11	Ceramic, welded, four leadless SMD outline
12	DCC-4/7050B	DCC-4/04, 05	Sheet 12	Ceramic, welded, four leadless SMD outline
13	QCC-10/7050A		Sheet 13	Ceramic, welded, ten leadless SMD outline
14	QCC-6/7050A	QCC-6/01, 02	Sheet 14	Ceramic, welded, six leadless SMD outline
15	DCC-6/6035A	DCC-4/06, 07	Sheet 15	Ceramic, welded, six leadless SMD outline
16	DCC-4/6035C		Sheet 16	Ceramic, welded, four leadless SMD outline
17	DCC-2/6035C		Sheet 17	Ceramic, welded, two leadless SMD outline
18	QCC-8/5050A	QCC-8/02	Sheet 18	Ceramic, welded, eight leadless SMD outline
19	QCC-12/5045A	QCC-12/02	Sheet 19	Ceramic, welded, twelve leadless SMD outline
20	QCC-8/5045A		Sheet 20	Ceramic, welded, eight leadless SMD outline
21	DCC-6/5032A		Sheet 21	Ceramic, welded, six leadless SMD outline
22	DCC-4/5032A		Sheet 22	Ceramic, welded, four leadless SMD outline
23	DCC-4/5032C		Sheet 23	Ceramic, welded, four leadless SMD outline
24	DCC-2/5032B	DCC-2/01	Sheet 24	Ceramic, welded, two leadless SMD outline
25	DCC-2/4818C		Sheet 25	Ceramic, welded, two leadless SMD outline
26	DCC-2/4115C		Sheet 26	Ceramic, welded, two leadless SMD outline
27	DCC-4/4025C	DCC-6/01	Sheet 27	Ceramic, welded, four leadless SMD outline
28	QCC-8/3838A		Sheet 28	Ceramic, welded, eight leadless SMD outline
29	DCC-6/3838A		Sheet 29	Ceramic, welded, six leadless SMD outline
30	DCC-6/3225A		Sheet 30	Ceramic, welded, six leadless SMD outline
31	DCC-4/3225C		Sheet 31	Ceramic, welded, four leadless SMD outline
32	DCC-4/3215C		Sheet 32	Ceramic, welded, four leadless SMD outline
33	DCC-2/3215C		Sheet 33	Ceramic, welded, two leadless SMD outline
34	QCC-8/3030B		Sheet 34	Ceramic, welded, eight leadless SMD outline
35	DCC-6/3030A		Sheet 35	Ceramic, welded, six leadless SMD outline
36	DCC-6/2520A		Sheet 36	Ceramic, welded, six leadless SMD outline
37	DCC-4/2520C/01,02,03		Sheet 37	Ceramic, welded, four leadless SMD outline
38	DCC-4/2020C		Sheet 38	Ceramic, welded, six leadless SMD outline
39	DCC-6/2016A		Sheet 39	Ceramic, welded, ~~four~~ six leadless SMD outline
40	DCC-4/2016C/01,02,03		Sheet 40	Ceramic, welded, four leadless SMD outline
41	DCC-2/2012C		Sheet 41	Ceramic, welded, two leadless SMD outline
42	DCC-4/1612C/01,02		Sheet 42	Ceramic, welded, four leadless SMD outline
43	DCC-2/1612C		Sheet 43	Ceramic, welded, two leadless SMD outline
44	DCC-2/1610C		Sheet 44	Ceramic, welded, two leadless SMD outline
45	DCC-4/1210C		Sheet 45	Ceramic, welded, four leadless SMD outline

AVA Documents
Document Sharing Hub
Full document details: IEC 61837-2-2020

No.	Type	Old type	Sheet No.	Description
46	DCC-8/3225A		Sheet 46	Ceramic, welded, eight leadless SMD outline
47	DCC-4/1008C/0,1,02		Sheet 47	Ceramic, welded, four leadless SMD outline

Documents
Document Sharing Hub
Full document details: IEC 61837-2-2020

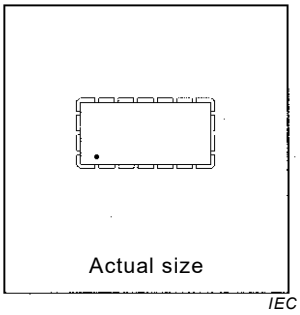

Ref.	Dimensions (mm)			Notes
	Min.	Nom.	Max.	
A	–	(18,0)	18,30	
B	–	(9,0)	9,30	
G	–	–	2,00	
K	0,50	–	1,10	
L_B	1,20	–	1,80	Note
e	–	2,54	–	
y	–	–	0,10	

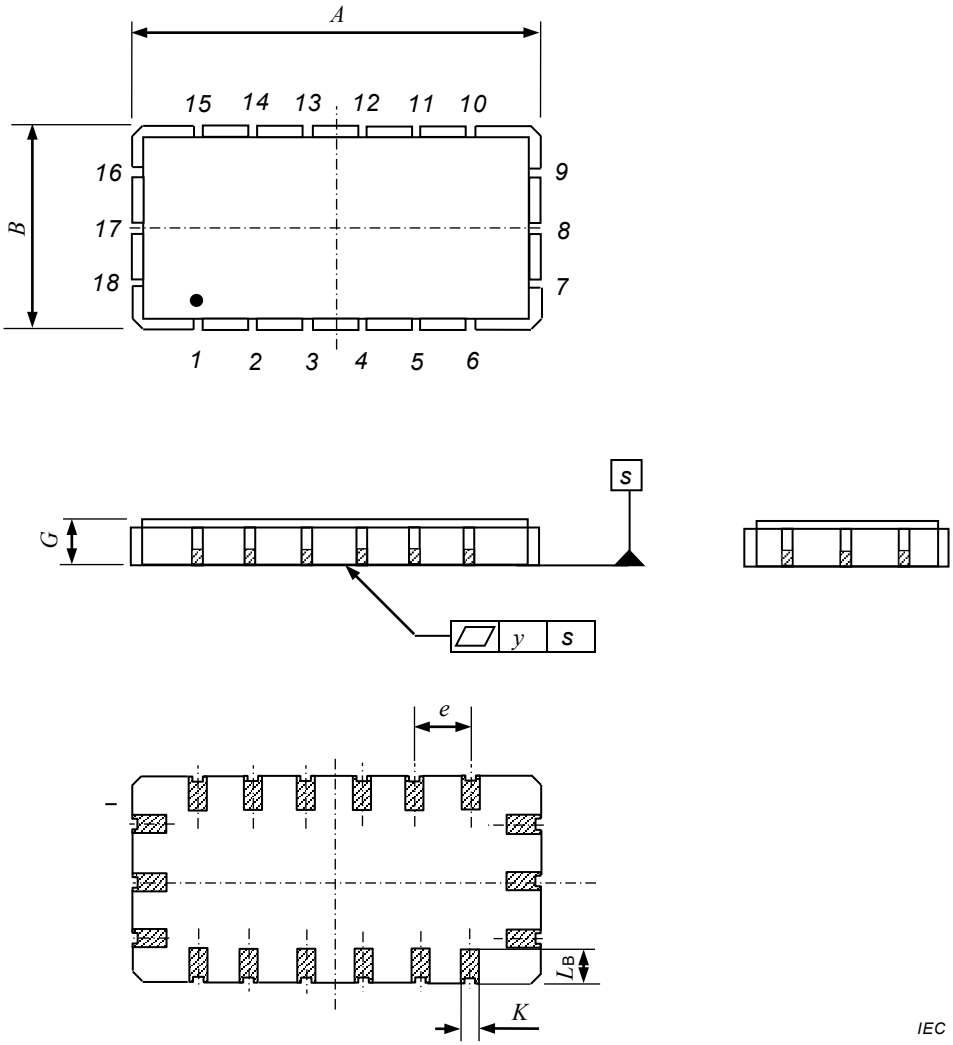

NOTE Dimension L_B max. can be increased to 2,10 mm for lead 1 to identity the orientation.

Ceramic, welded, eighteen leadless SMD outline – Type QCC-18/1809A	Scale 3: 1	
Sheet 1		

Documents
Document Sharing Hub
Full document details: IEC 61837-2-2020

Terminal land connections of Type QCC-18/1809A

No.	Crystal unit	Crystal oscillator	Crystal filter	SAW devices
1				Ground
2				Option
3				Option
4				Option
5				Option
6				Ground
7				Input/Output
8				Ground
9				Input/Output /Ground
10				Ground
11				Option
12				Option
13				Option
14				Option
15				Ground
16				Output/Input
17				Ground
18				Output/Input /Ground

Documents
Document Sharing Hub
Full document details: IEC 61837-2-2020

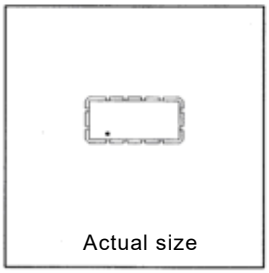

IEC

Ref.	Dimensions (mm)			Notes
	Min.	Nom.	Max.	
A	–	(14,0)	14,30	
B	–	(6,5)	6,80	
G	–	–	2,00	
K	0,50	–	1,10	
L_B	1,70	–	2,30	
e	–	2,54	–	
y	–	–	0,10	

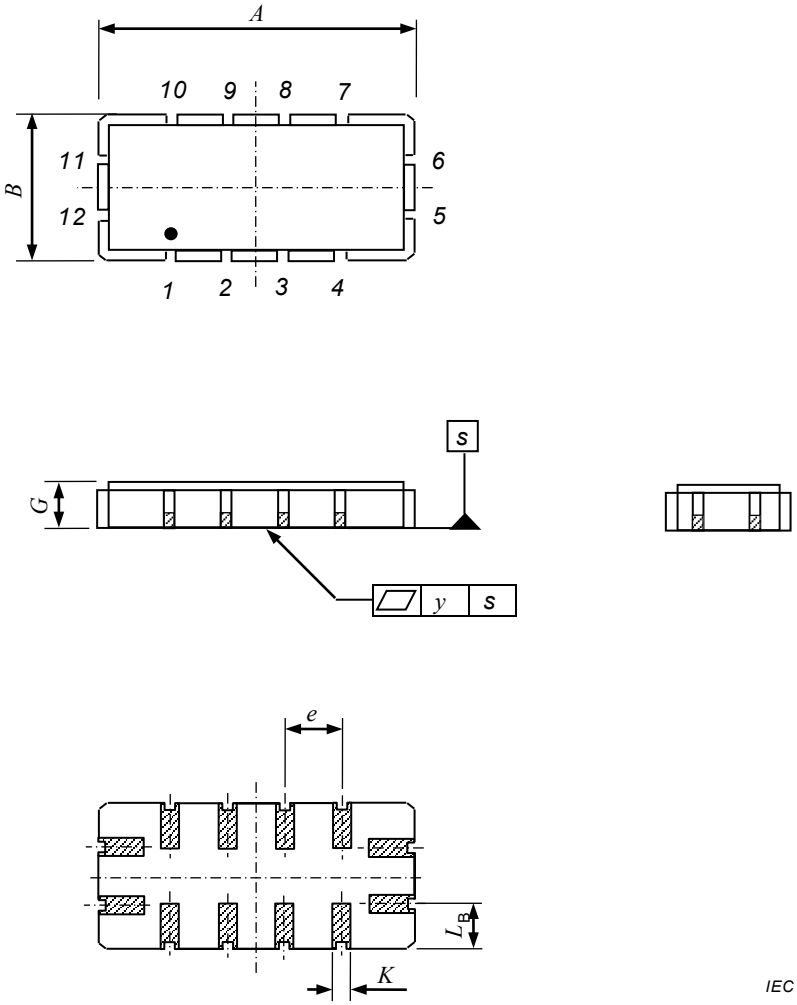

IEC

Ceramic, welded, twelve leadless SMD outline – Type QCC-12/1407A	Scale 3: 1	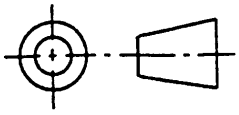
Sheet 2		

Documents
Document Sharing Hub
Full document details: IEC 61837-2-2020

© IEC 2020

Terminal land connections of Type QCC-12/1407A

No.	Crystal unit	Crystal oscillator	Crystal filter	SAW devices
1				Option
2				Option
3				Ground
4				Option
5				Output/Input
6				Output/Input /Ground
7				Option
8				Ground
9				Option
10				Option
11				Input/Output
12				Input/Output /Ground

Documents
Document Sharing Hub
Full document details: IEC 61837-2-2020

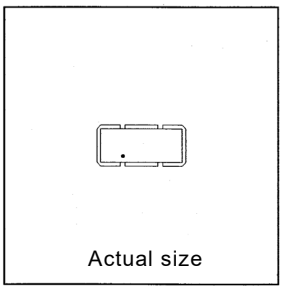

IEC

Ref.	Dimensions (mm)			Notes
	Min.	Nom.	Max.	
A	–	(12,0)	12,30	
B	–	(5,5)	5,80	
G	–	–	2,30	
K	1,80	–	2,20	
L_B	1,30	–	1,90	
e	–	5,08	–	
e_1	–	3,90	–	
y	–	–	0,10	

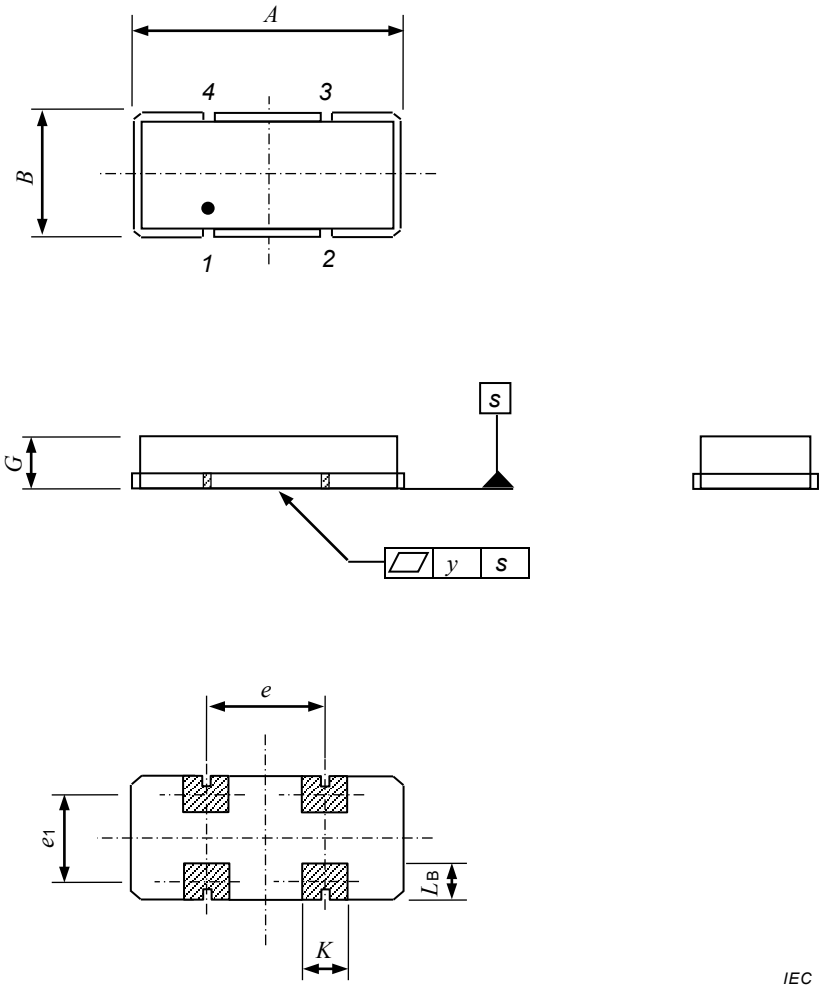

IEC

Ceramic, welded, four leadless SMD outline – Type DCC-4/1206A	Scale 3: 1	
Sheet 3		

Documents
Document Sharing Hub
Full document details: IEC 61837-2-2020

Terminal land connections of Type DCC-4/1206A

No.	Crystal unit	Crystal oscillator	Crystal filter	SAW devices
1	Terminal 1	Control voltage		
2	NC	Ground		
3	Terminal 2	Output		
4	NC	DC supply		

Documents
Document Sharing Hub
Full document details: IEC 61837-2-2020

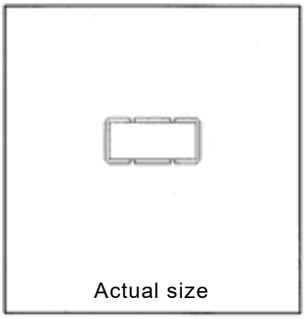

Ref.	Dimensions (mm)			Notes
	Min.	Nom.	Max.	
A	–	(12,0)	12,30	
B	–	(5,5)	5,80	
G	–	–	2,70	
K	1,60	–	2,20	
L_B	5,20	–	5,80	
e	–	5,08	–	
y	–	–	0,10	

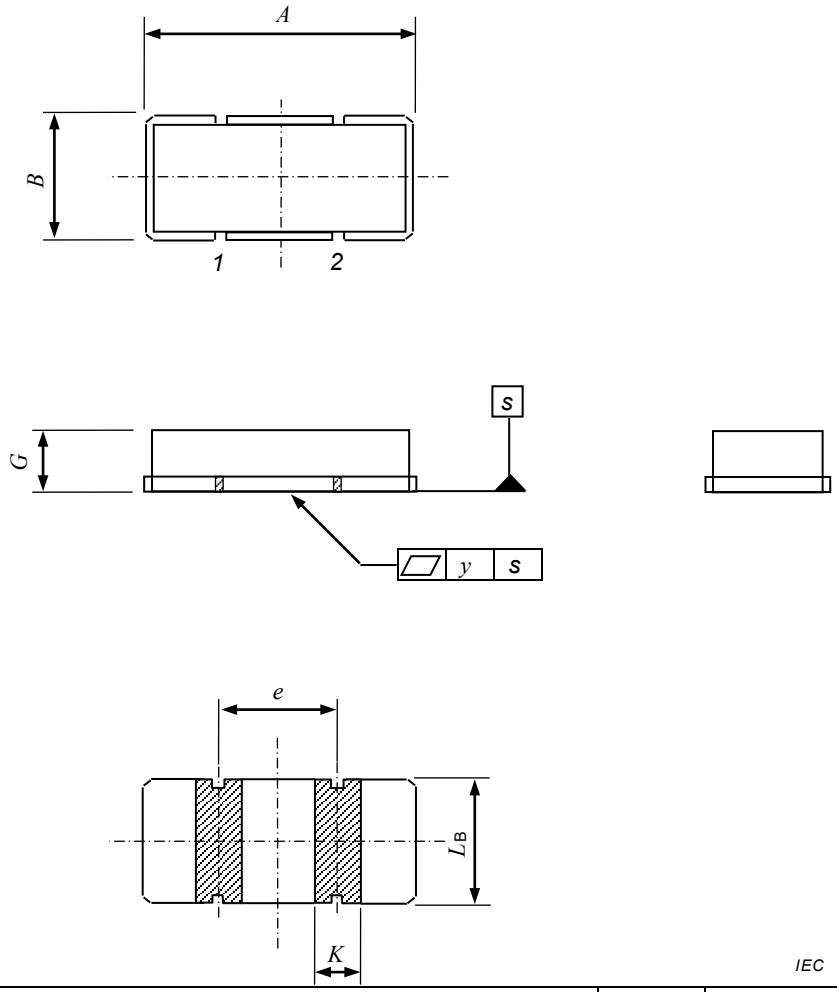

Ceramic, welded, two leadless SMD outline – Type DCC-2/1206A	Scale 3: 1	
Sheet 4		

Documents
Document Sharing Hub
Full document details: IEC 61837-2-2020

Terminal land connections of Type DCC-2/1206A

No.	Crystal unit	Crystal oscillator	Crystal filter	SAW devices
1	Terminal 1			
2	Terminal 2			

Documents
Document Sharing Hub
Full document details: IEC 61837-2-2020

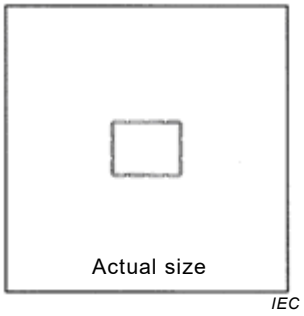

Ref.	Dimensions (mm)			Notes
	Min.	Nom.	Max.	
A	–	(9,2)	9,50	
B	–	(7,2)	7,50	
G	–	–	2,00	
K	0,60	–	1,20	
L_B	0,80	–	1,40	Note
e	–	2,54	–	
y	–	–	0,10	

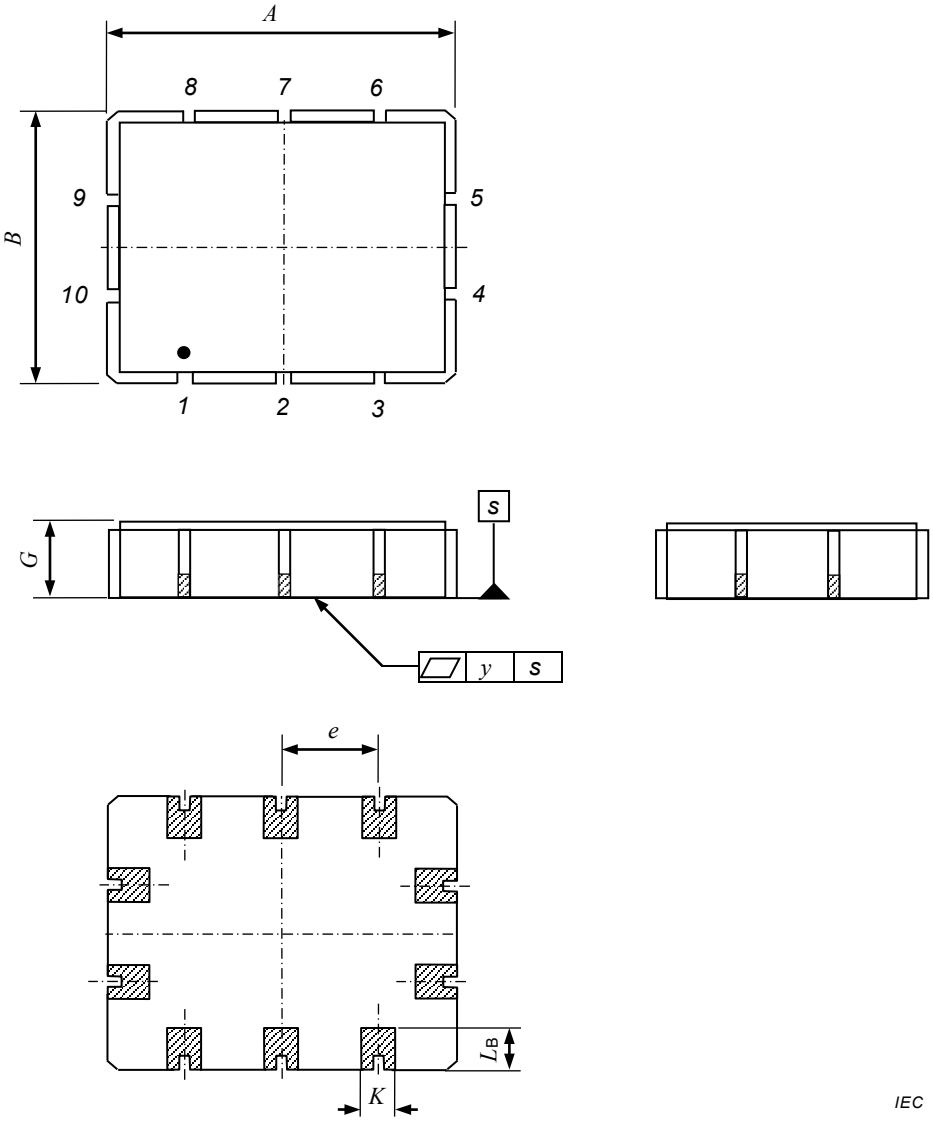

NOTE Dimension L_B max. can be increased to 2,00 mm for lead 1 to identify the orientation.

Ceramic, welded, ten leadless SMD outline – Type QCC-10/9272A	Scale 5: 1	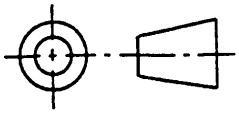
Sheet 5		

Documents
Document Sharing Hub
Full document details: IEC 61837-2-2020

Terminal land connections of Type QCC-10/9272A

No.	Crystal unit	Crystal oscillator	Crystal filter	SAW devices
1				Input/Output /Ground
2				Input/Output
3				Ground
4				Ground
5				Ground
6				Output/Input /Ground
7				Output/Input
8				Option
9				Ground
10				Ground

Documents
Document Sharing Hub
Full document details: IEC 61837-2-2020

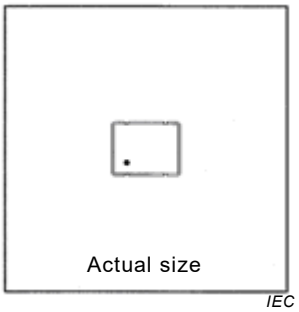

Ref.	Dimensions (mm)			Notes
	Min.	Nom.	Max.	
A	–	(9,0)	9,30	
B	–	(7,0)	7,30	
G	–	–	2,00	
K	1,10	–	1,70	
L_B	0,90	–	1,50	
e	–	5,08	–	
e_1	–	5,80	–	
y	–	–	0,10	

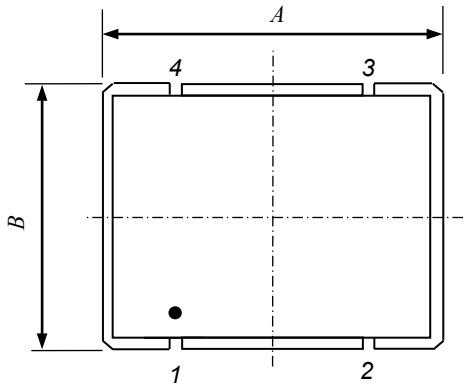

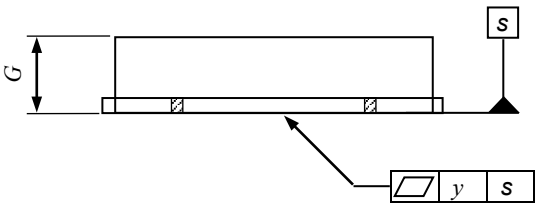

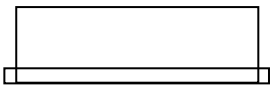

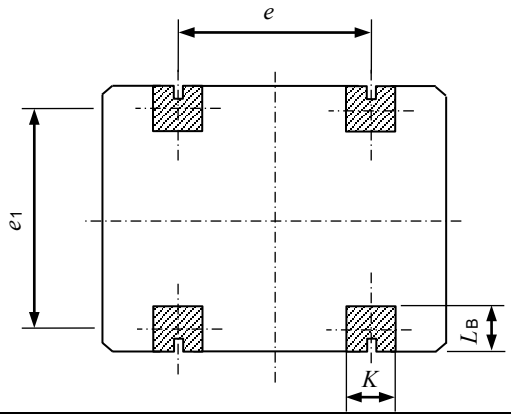

IEC

Ceramic, welded, four leadless SMD outline – Type DCC-4/9070A	Scale 5: 1	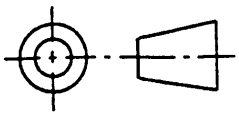
Sheet 6		

Documents
Document Sharing Hub
Full document details: IEC 61837-2-2020

Terminal land connections of Type DCC-4/9070A

No.	Crystal unit	Crystal oscillator	Crystal filter	SAW devices
1		Control voltage		
2		Ground		
3		Output		
4		DC supply		

Documents
Document Sharing Hub
Full document details: IEC 61837-2-2020

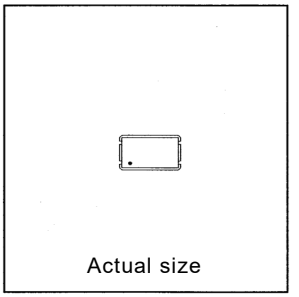

Ref.	Dimensions (mm)			Notes
	Min.	Nom.	Max.	
A	–	(8,0)	8,30	
B	–	(4,5)	4,80	
G	–	–	2,00	
K	0,70	–	1,30	
L_B	0,80	–	1,40	
e	–	2,54	–	
e_1	–	6,90	–	
y	–	–	0,10	

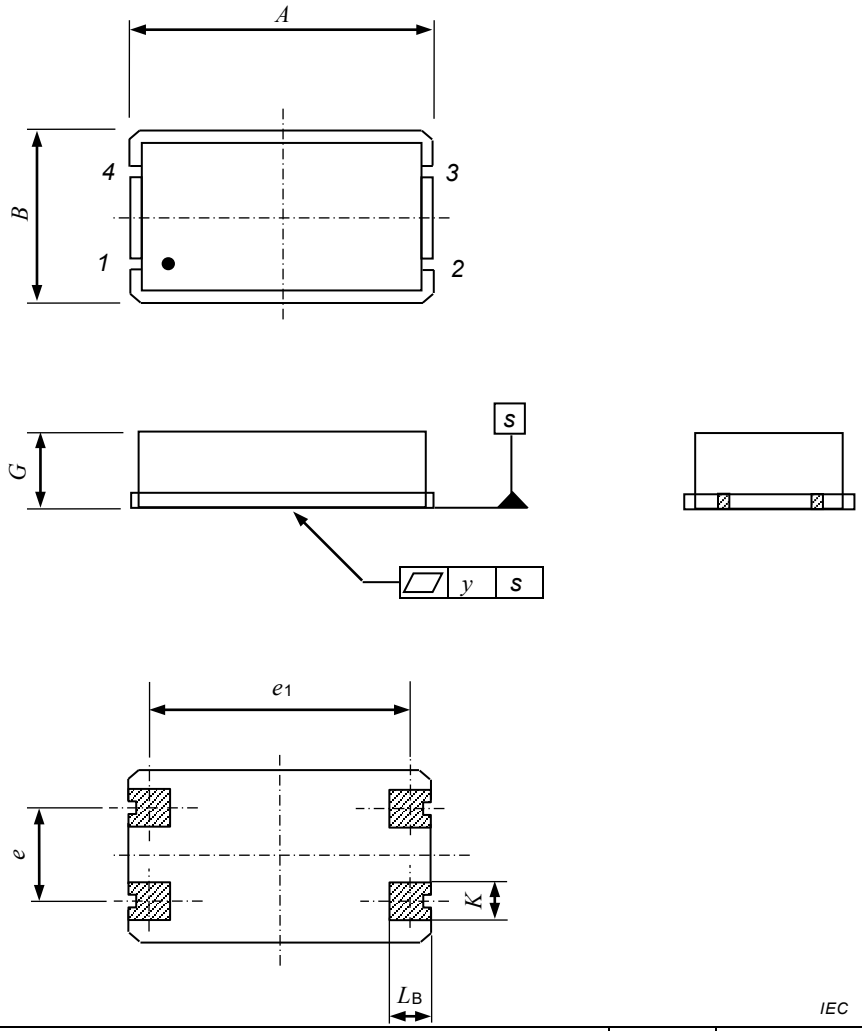

Ceramic, welded, four leadless SMD outline – Type DCC-4/8045B	Scale 5: 1	
Sheet 7		

Documents
Document Sharing Hub
Full document details: IEC 61837-2-2020

Terminal land connections of Type DCC-4/8045B

No.	Crystal unit	Crystal oscillator	Crystal filter	SAW devices
1	Terminal 1	Control voltage		
2	Option	Ground		
3	Terminal 2	Output		
4	Option	DC supply		

Documents
Document Sharing Hub
Full document details: IEC 61837-2-2020

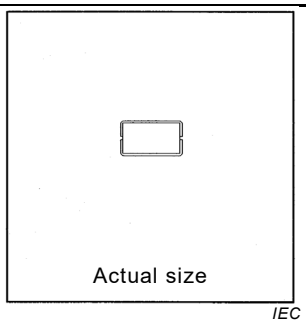

Ref.	Dimensions (mm)			Notes
	Min.	Nom.	Max	
A	–	(8,0)	8,30	
B	–	(4,5)	4,80	
G	–	–	1,60	
K	1,60	–	2,20	
L_B	0,70	–	1,30	
e_1	–	7,00	–	
y	–	–	0,10	

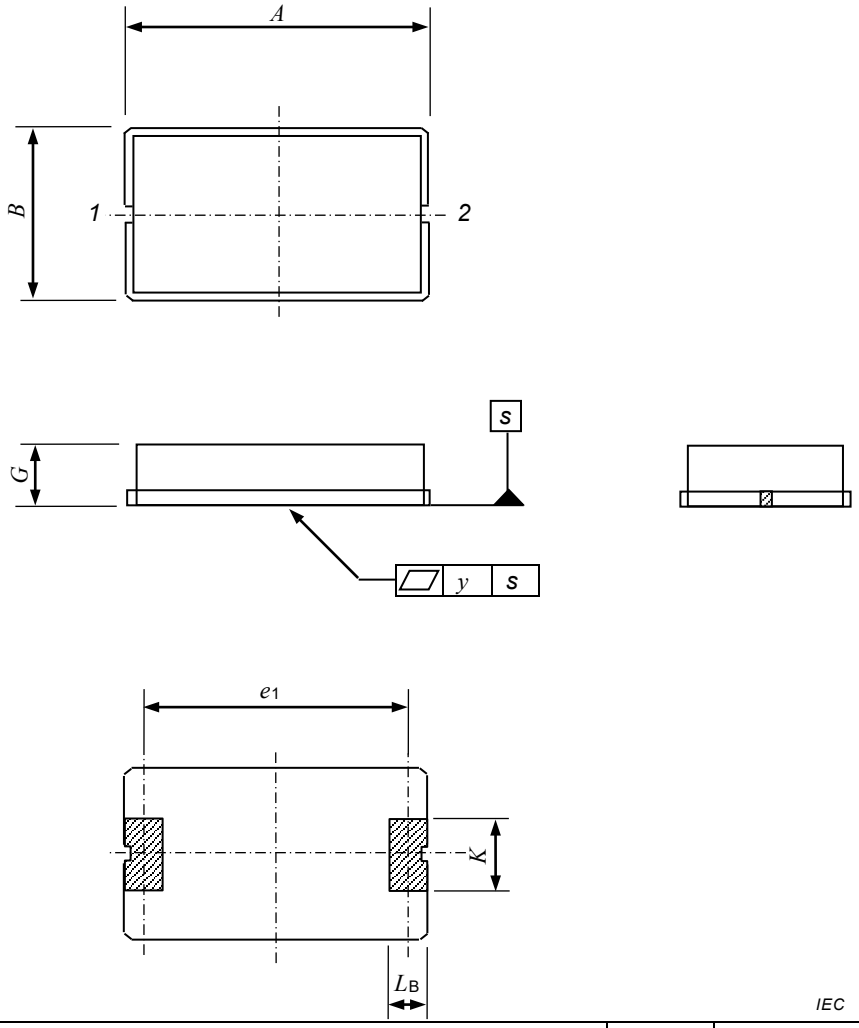

Ceramic, welded, two leadless SMD outline – Type DCC-2/8045B	Scale 5: 1	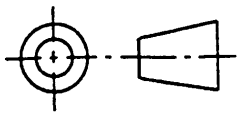
Sheet 8		

Documents
Document Sharing Hub
Full document details: IEC 61837-2-2020

Terminal land connections of Type DCC-2/8045B

No.	Crystal unit	Crystal oscillator	Crystal filter	SAW devices
1	Terminal 1			
2	Terminal 2			

Documents
Document Sharing Hub
Full document details: IEC 61837-2-2020

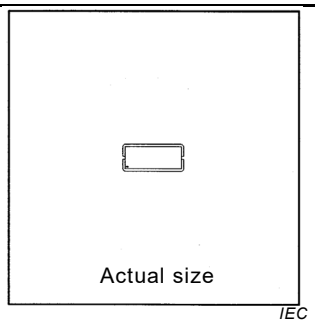

Ref.	Dimensions (mm)			Notes
	Min.	Nom.	Max.	
A	–	(7,8)	8,10	
B	–	(3,4)	3,70	
G	–	–	1,20	
K_1	0,70	–	1,30	
K_2	0,80	–	1,40	
L_{B1}	0,30	–	0,90	
L_{B2}	1,10	–	1,70	
e_1	–	6,70	–	
e_2	–	1,40	–	
y	–	–	0,10	

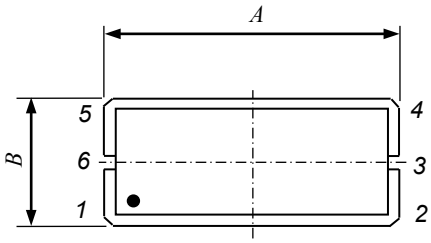

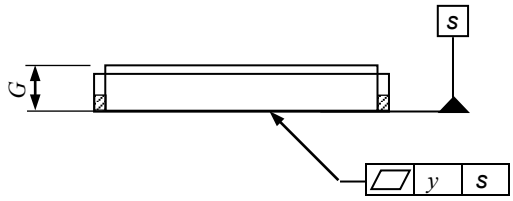

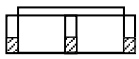

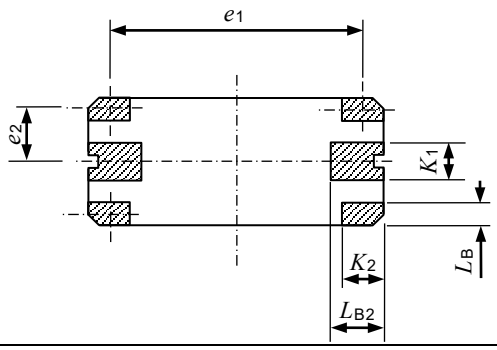

Ceramic, welded, six leadless SMD outline – Type DCC-6/7834B	Scale 5: 1	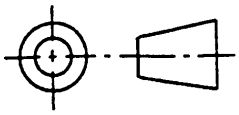
Sheet 9		

Documents
Document Sharing Hub
Full document details: IEC 61837-2-2020

Terminal land connections of Type DCC-6/7834B

No.	Crystal unit	Crystal oscillator	Crystal filter	SAW devices
1	Option			
2	Option			
3	Terminal 1			
4	Option			
5	Option			
6	Terminal 2			

Documents
Document Sharing Hub
Full document details: IEC 61837-2-2020

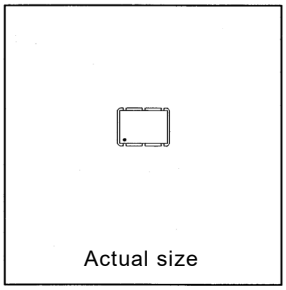

IEC

Ref.	Dimensions (mm)			Notes
	Min.	Nom.	Max.	
A	–	(7,0)	7,30	
B	–	(5,0)	5,30	
G	–	–	2,00	
K	1,10	–	1,70	
L_B	0,80	–	1,40	
e	–	2,54	–	
e_1	–	3,90	–	
y	–	–	0,10	

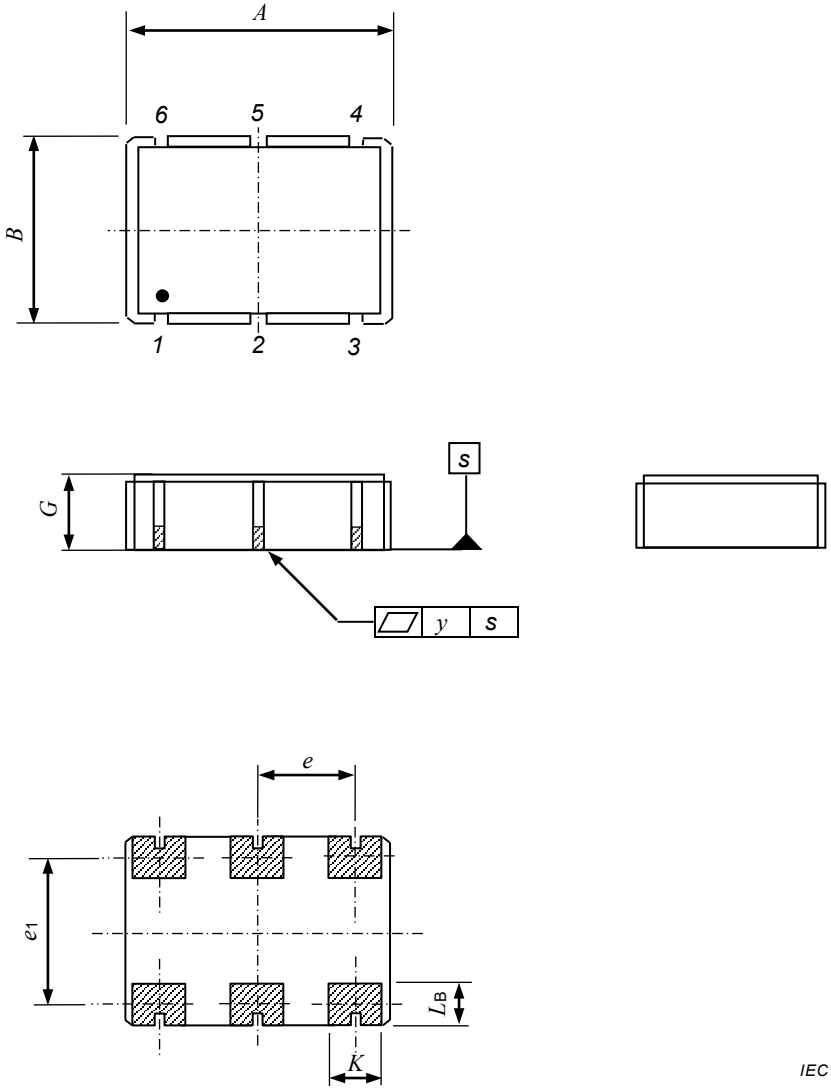

IEC

Ceramic, welded, six leadless SMD outline – Type DCC-6/7050A	Scale 5: 1	
Sheet 10		

Documents
Document Sharing Hub
Full document details: IEC 61837-2-2020

Terminal land connections of Type DCC-6/7050A

No.	Crystal unit	Crystal oscillator	Crystal filter	SAW devices
1		Output enable		
2		NC		
3		Ground		
4		Output		
5		Output		
6		DC supply		

Documents
Document Sharing Hub
Full document details: IEC 61837-2-2020

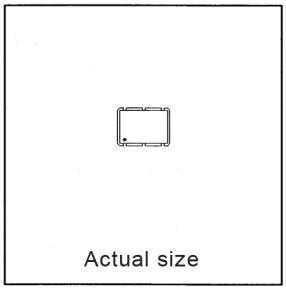

IEC

Ref.	Dimensions (mm)			Notes
	Min.	Nom.	Max.	
A	—	(7,0)	7,30	
B	—	(5,0)	5,30	
G	—	—	2,00	
K	1,10	—	1,70	
L_B	0,80	—	1,40	
e	—	2,54	—	
e_1	—	3,90	—	
y	—	—	0,10	

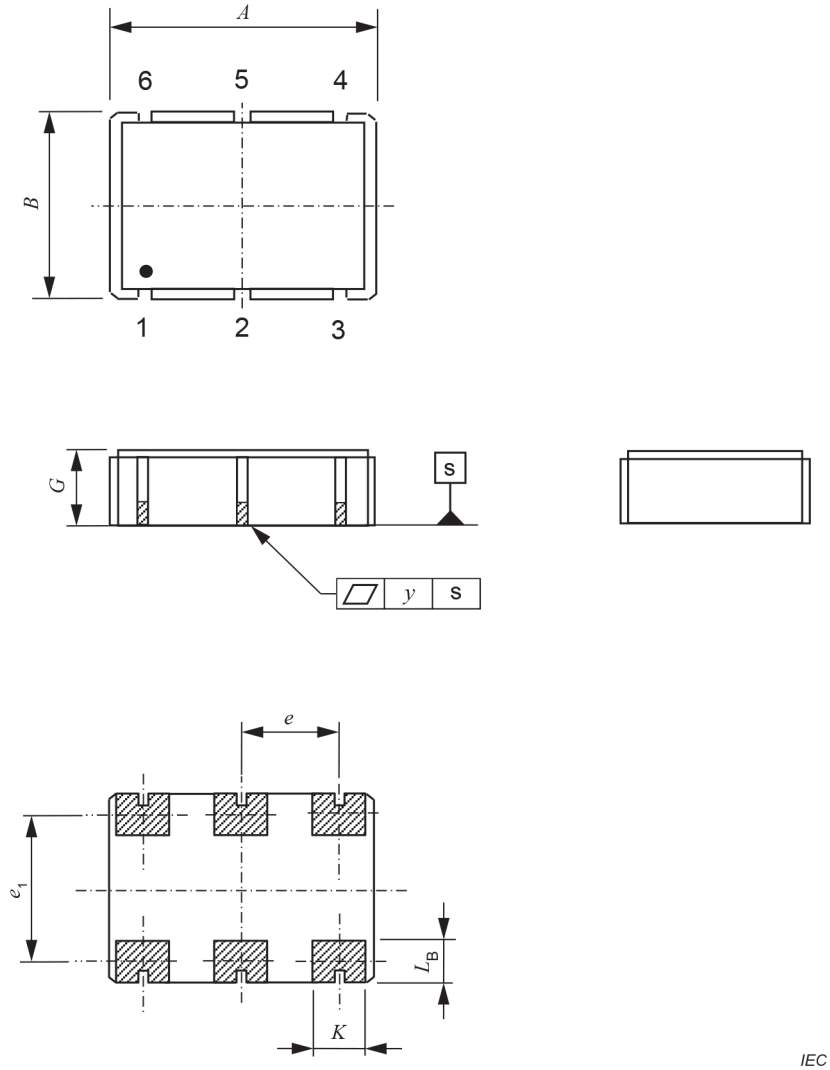

IEC

Ceramic, welded, six leadless SMD outline – Type DCC-6/7050A	Scale 15: 1	
Sheet 10		

Documents
Document Sharing Hub
Full document details: IEC 61837-2-2020

Terminal land connections of Type DCC-6/7050A

No.	Crystal unit	Crystal oscillator	Crystal filter	SAW devices
1		Option		
2		Option		
3		Ground		
4		Output		
5		Option		
6		DC supply		

Documents
Document Sharing Hub
Full document details: IEC 61837-2-2020

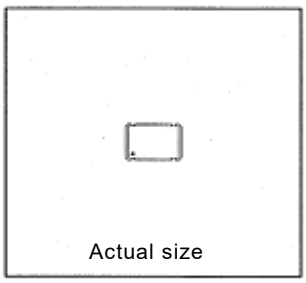

Ref.	Dimensions (mm)			Notes
	Min.	Nom.	Max.	
A	–	(7,0)	7,30	
B	–	(5,0)	5,30	
G	–	–	1,90	
K	1,10	–	1,70	
L_B	0,90	–	1,50	
e	–	5,08	–	
e_1	–	3,80	–	
y	–	–	0,10	

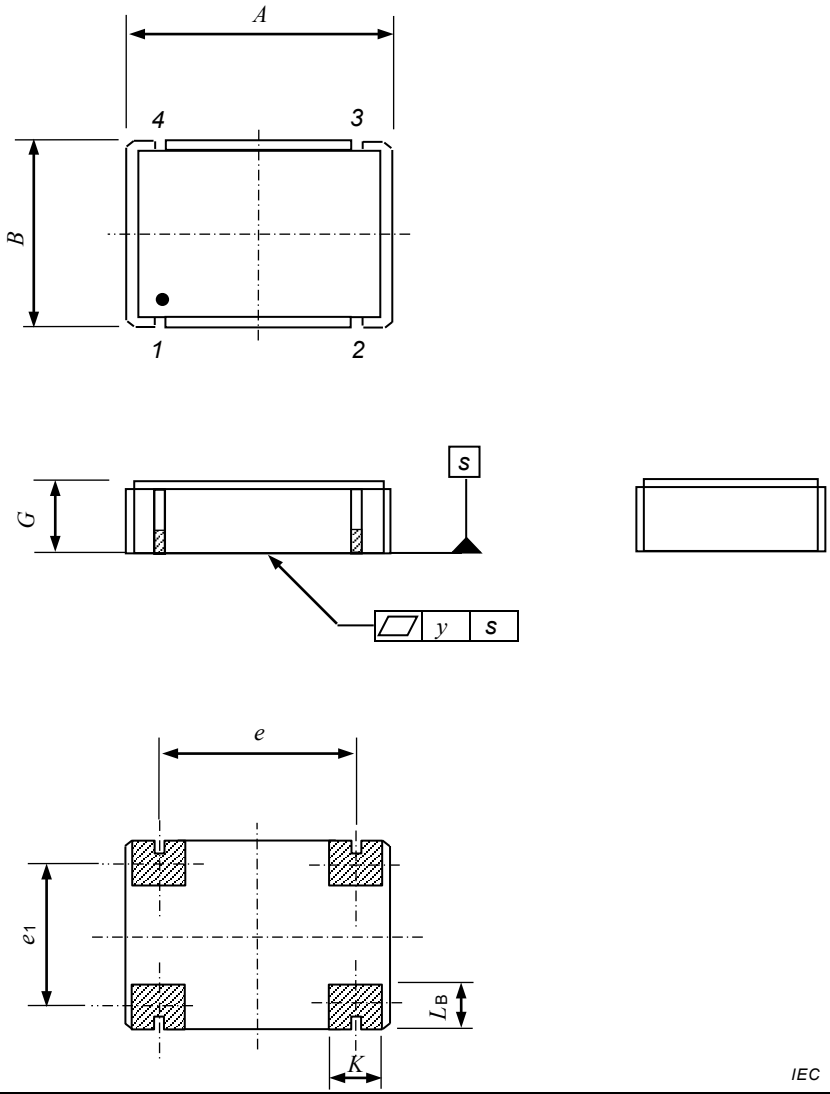

Ceramic, welded, four leadless SMD outline – Type DCC-4/7050A	Scale 5: 1	
Sheet 11		

Documents
Document Sharing Hub
Full document details: IEC 61837-2-2020

Terminal land connections of Type DCC-4/7050A

No.	Crystal unit	Crystal oscillator	Crystal filter	SAW devices
1		Control voltage		
2		Ground		
3		Output		
4		DC supply		

Documents
Document Sharing Hub
Full document details: IEC 61837-2-2020

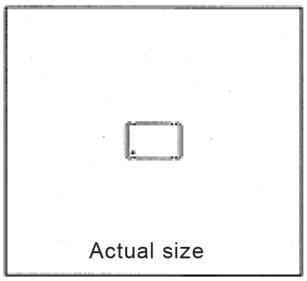

IEC

Ref.	Dimensions (mm)			Notes
	Min.	Nom.	Max.	
A	—	(7,0)	7,30	
B	—	(5,0)	5,30	
G	—	—	1,90	
K	1,10	—	1,70	
L_B	0,90	—	1,50	
e	—	5,08	—	
e_1	—	3,80	—	
y	—	—	0,10	

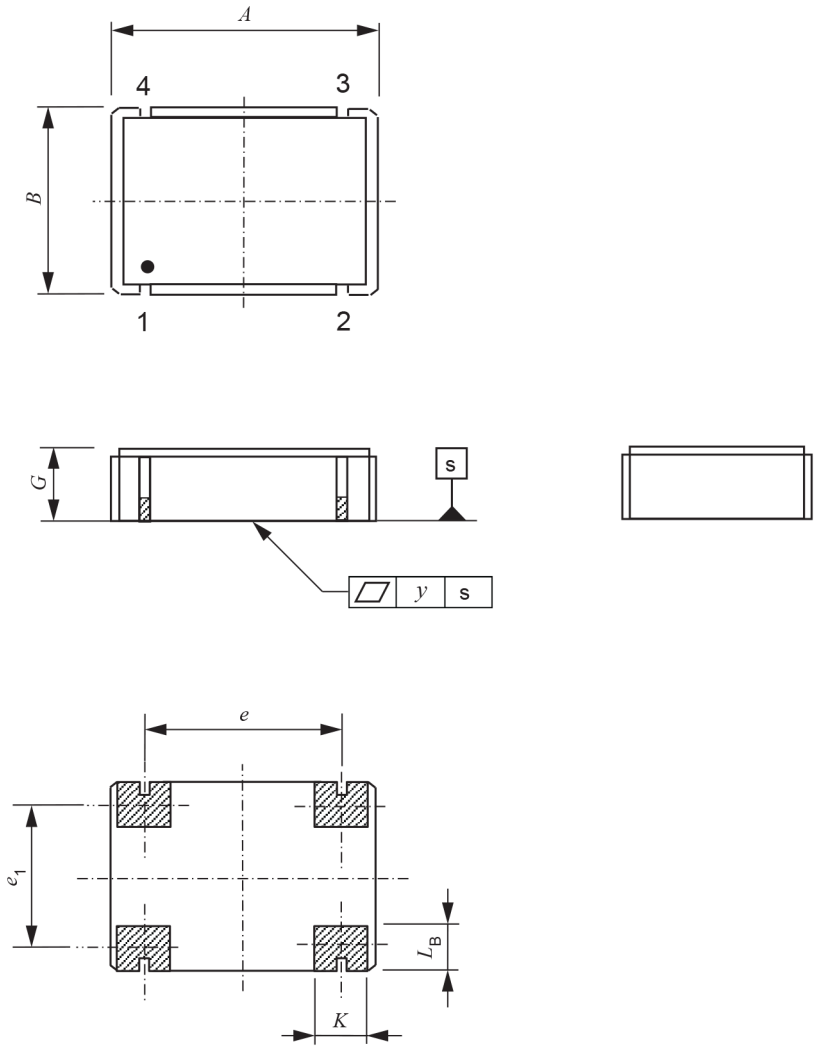

IEC

Ceramic, welded, four leadless SMD outline – Type DCC-4/7050A	Scale 5: 1	
Sheet 11		

Documents
Document Sharing Hub
Full document details: IEC 61837-2-2020

Terminal land connections of Type DCC-4/7050A

No.	Crystal unit	Crystal oscillator	Crystal filter	SAW devices
1		Option		
2		Ground		
3		Output		
4		DC supply		

Documents
Document Sharing Hub
Full document details: IEC 61837-2-2020

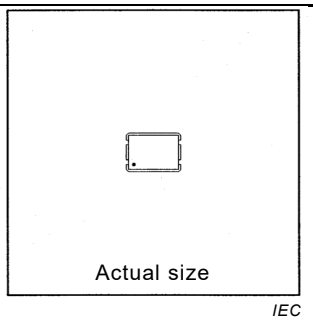

Ref.	Dimensions (mm)			Notes
	Min.	Nom.	Max.	
A	–	(7,0)	7,30	
B	–	(5,0)	5,30	
G	–	–	1,50	
K	0,70	–	1, 30	
L_B	0,70	–	1,30	
e	–	2,54	–	
e_1	–	6,00	–	
y	–	–	0,10	

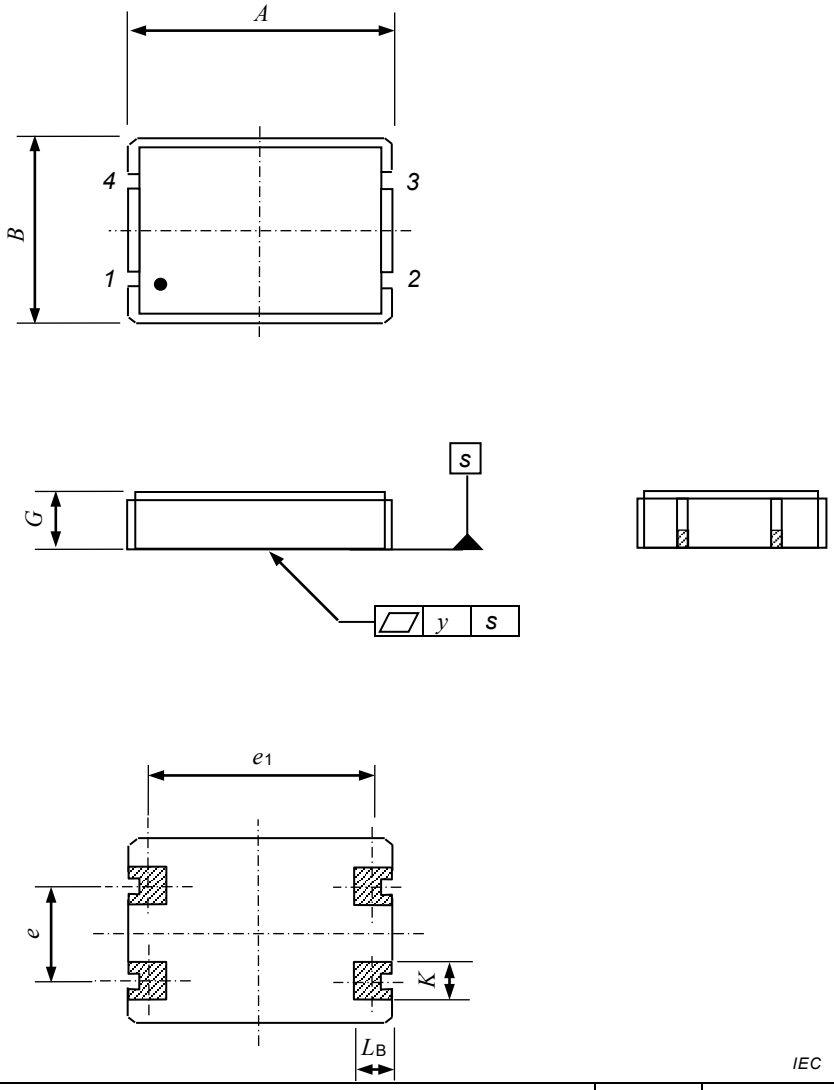

Ceramic, welded, four leadless SMD outline – Type DCC-4/7050B	Scale 5: 1	
Sheet 12		

Documents
Document Sharing Hub
Full document details: IEC 61837-2-2020

Terminal land connections of Type DCC-4/7050B

No.	Crystal unit	Crystal oscillator	Crystal filter	SAW devices
1	Terminal 1			
2	Option			
3	Terminal 2			
4	Option			

Documents
Document Sharing Hub
Full document details: IEC 61837-2-2020

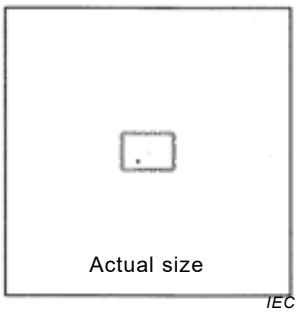

Ref.	Dimensions (mm)			Notes
	Min.	Nom.	Max.	
A	–	(7,0)	7,30	
B	–	(5,0)	5,30	
G	–	–	2,00	
K	0,40	–	1,00	
L_B	0,80	–	1,20	Note
e	–	1,27	–	
e_1	–	4,00	–	
y	–	–	0,10	

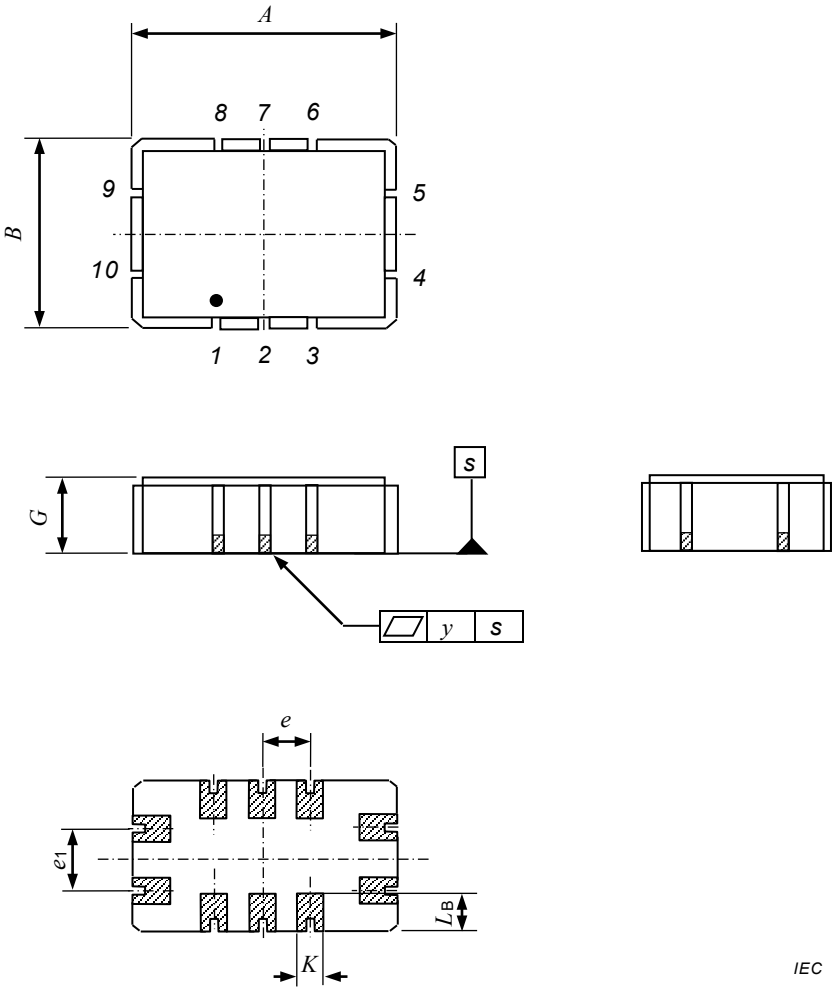

NOTE Dimension L_B max. can be increased to 1,60 mm for lead 1 to identify the orientation.

Ceramic, welded, ten leadless SMD outline – Type QCC-10/7050A	Scale 5: 1	
Sheet 13		

Documents
Document Sharing Hub
Full document details: IEC 61837-2-2020

Terminal land connections of Type QCC-10/7050A

No.	Crystal unit	Crystal oscillator	Crystal filter	SAW devices
1		Option		Option
2		Option		Output/Input
3		Option		Option
4		Ground		Option
5		Output		Option
6		Option		Option
7		Option		Input/Output
8		Option		Option
9		DC supply		Ground
10		Option/Control voltage		Ground

Documents
Document Sharing Hub
Full document details: IEC 61837-2-2020

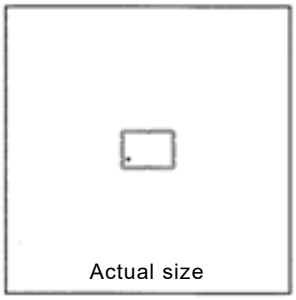

IEC

Ref.	Dimensions (mm)			Notes
	Min.	Nom.	Max.	
A	–	(7,0)	7,30	
B	–	(5,0)	5,30	
G	–	–	1,50	
K	0,70	–	1,30	
L_B	0,70	–	1,30	
e	–	2,54	–	
e_1	–	6,00	–	
y	–	–	0,10	

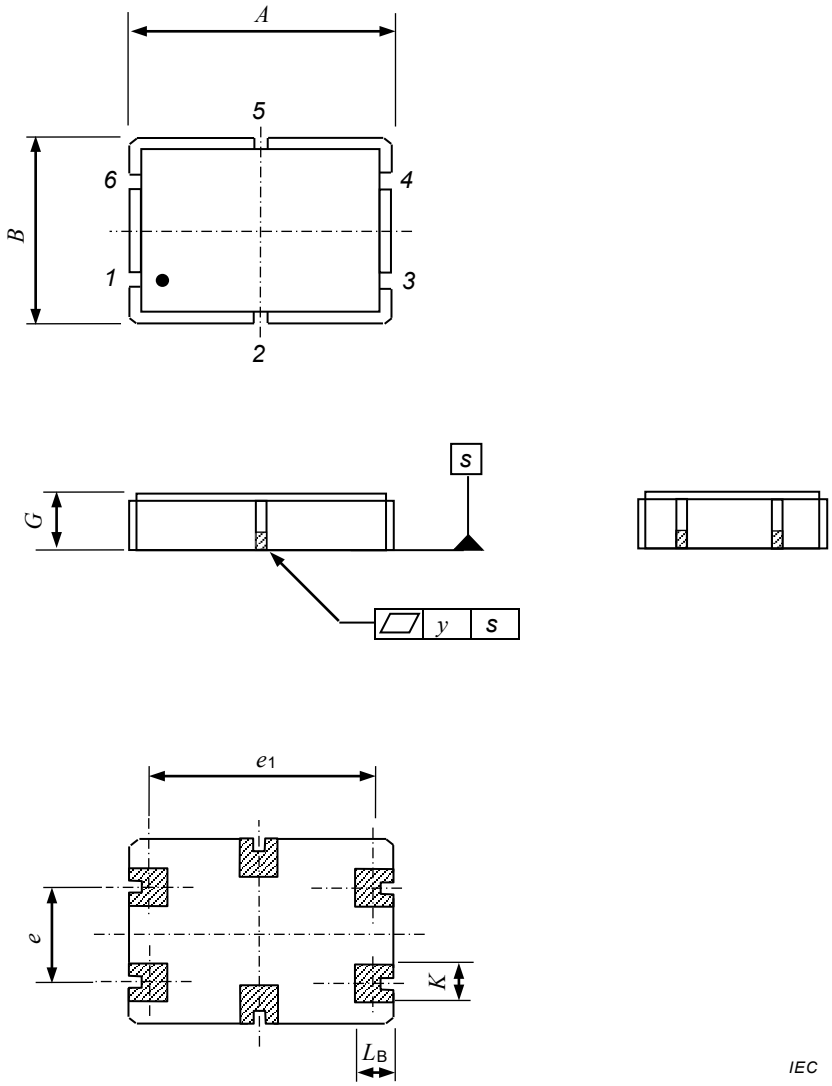

IEC

Ceramic, welded, six leadless SMD outline – Type QCC-6/7050A	Scale 5: 1	
Sheet 14		

Documents
Document Sharing Hub
Full document details: IEC 61837-2-2020

Terminal land connections of Type QCC-6/7050A

No.	Crystal unit	Crystal oscillator	Crystal filter	SAW devices
1			Ground	
2			Option	
3			Output/Input	
4			Ground	
5			Option	
6			Input/Output	

Documents
Document Sharing Hub
Full document details: IEC 61837-2-2020

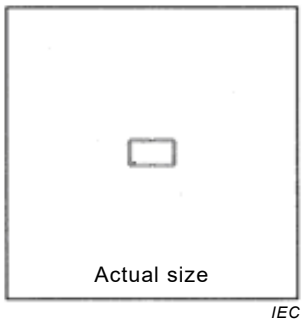

Ref.	Dimensions (mm)			Notes
	Min.	Nom.	Max.	
A	–	(6,0)	6,20	
B	–	(3,5)	3,70	
G	–	–	1,25	
K_1	0,80	–	1,20	
L_B	1,30		1,70	
e_1	–	4,50	–	
e_2	–	2,50	–	
y	–	–	0,10	

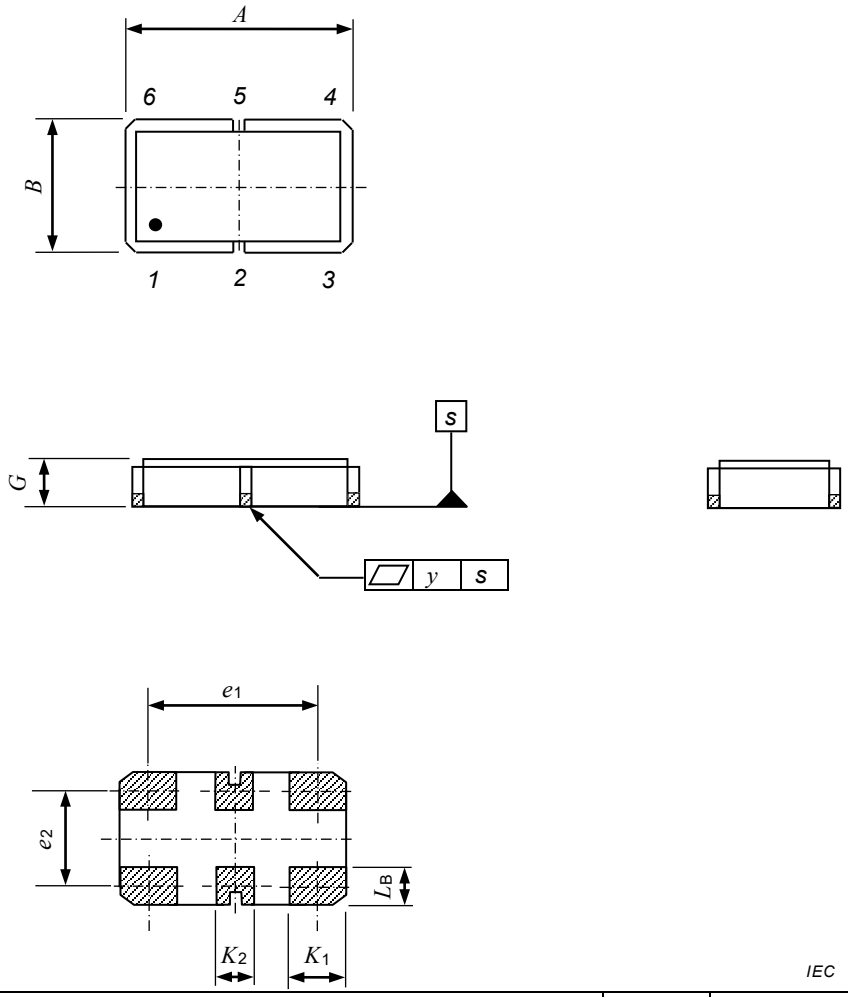

Ceramic, welded, six leadless SMD outline –

Type DCC-6/6035A

Scale

5: 1

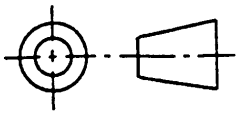

Sheet 15

Documents
Document Sharing Hub
Full document details: IEC 61837-2-2020

Terminal land connections of Type DCC-6/6035A

No.	Crystal unit	Crystal oscillator	Crystal filter	SAW devices
1			Ground	Ground
2			Ground	Input/Output
3			Output/Input	Ground
4			Ground	Ground
5			Ground	Output/Input
6			Input/Output	Ground

Documents
Document Sharing Hub
Full document details: IEC 61837-2-2020

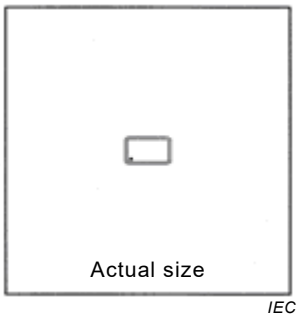

Ref.	Dimensions (mm)			Notes
	Min.	Nom.	Max.	
A	–	(6,0)	6,20	
B	–	(3,5)	3,70	
G	–	–	1,20	
K	1,30	–	1,70	
L_B	0,76		1,16	
e	–	2,54	–	
e_1	–	4,50	–	
y	–	–	0,10	

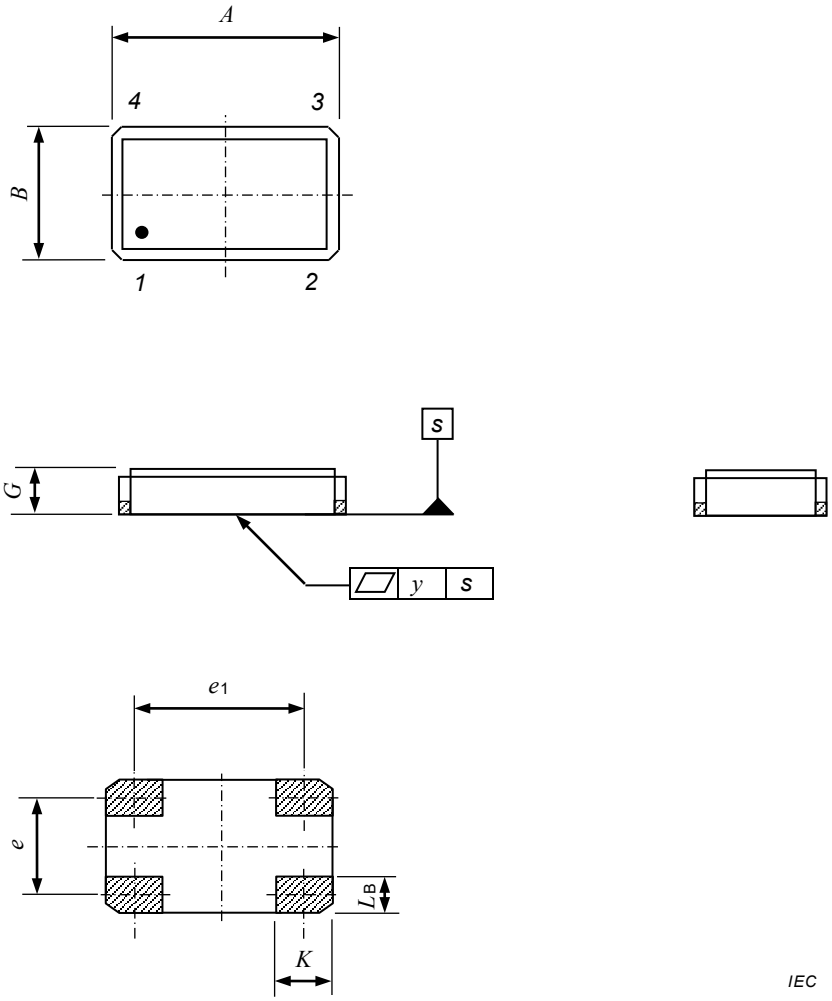

Ceramic, welded, four leadless SMD outline – Type DCC-4/6035C	Scale 5: 1	
Sheet 16		

Documents
Document Sharing Hub
Full document details: IEC 61837-2-2020

Terminal land connections of Type DCC-4/6035C

No.	Crystal unit	Crystal oscillator	Crystal filter	SAW devices
1	Terminal 1	Control voltage		
2	Option	Ground		
3	Terminal 2	Output		
4	Option	DC supply		

Documents
Document Sharing Hub
Full document details: IEC 61837-2-2020

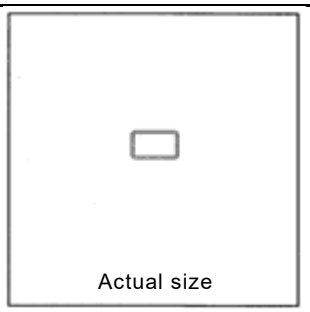

IEC

Ref.	Dimensions (mm)			Notes
	Min.	Nom.	Max.	
A	–	(6,0)	6,20	
B	–	(3,5)	3,70	
G	–	–	1,60	
K	3,30	–	3,70	
L_B	1,30		1,70	
e_1	–	4,50	–	
y	–	–	0,10	

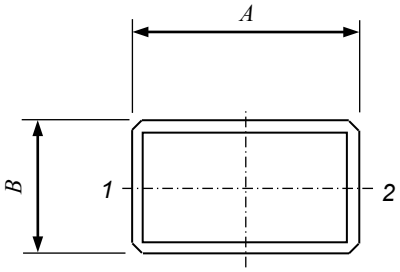

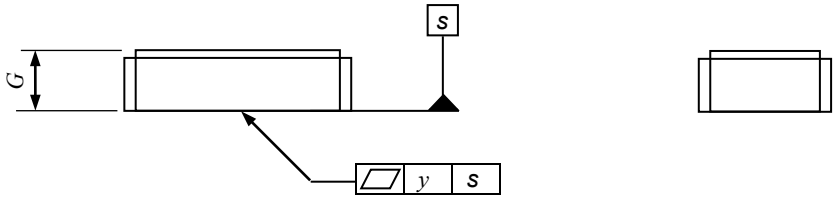

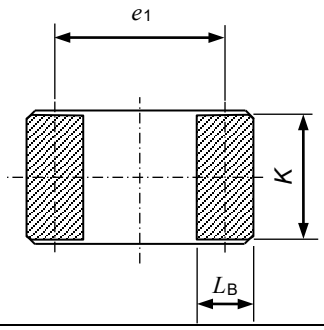

IEC

Ceramic, welded, two leadless SMD outline –
Type DCC-2/6035C

Scale
5: 1

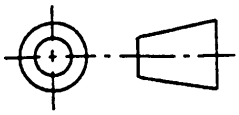

Sheet 17

Documents
Document Sharing Hub
Full document details: IEC 61837-2-2020