IEC 61851-21-1

Edition 1.0 2017-06

INTERNATIONAL STANDARD

colour inside

Electric vehicle conductive charging system –
Part 21-1: Electric vehicle on-board charger EMC requirements for conductive connection to an AC/DC supply

IEC 61851-21-1:2017-06(en)

Documents
Document Sharing Hub

Full document details: IEC 61851-21-1 2017

THIS PUBLICATION IS COPYRIGHT PROTECTED

Copyright © 2017 IEC, Geneva, Switzerland

All rights reserved. Unless otherwise specified, no part of this publication may be reproduced or utilized in any form or by any means, electronic or mechanical, including photocopying and microfilm, without permission in writing from either IEC or IEC's member National Committee in the country of the requester. If you have any questions about IEC copyright or have an enquiry about obtaining additional rights to this publication, please contact the address below or your local IEC member National Committee for further information.

IEC Central Office
3, rue de Varembé
CH-1211 Geneva 20
Switzerland

Tel.: +41 22 919 02 11
Fax: +41 22 919 03 00
info@iec.ch
www.iec.ch

About the IEC
The International Electrotechnical Commission (IEC) is the leading global organization that prepares and publishes International Standards for all electrical, electronic and related technologies.

About IEC publications
The technical content of IEC publications is kept under constant review by the IEC. Please make sure that you have the latest edition, a corrigenda or an amendment might have been published.

IEC Catalogue - webstore.iec.ch/catalogue
The stand-alone application for consulting the entire bibliographical information on IEC International Standards, Technical Specifications, Technical Reports and other documents. Available for PC, Mac OS, Android Tablets and iPad.

IEC publications search - www.iec.ch/searchpub
The advanced search enables to find IEC publications by a variety of criteria (reference number, text, technical committee,…). It also gives information on projects, replaced and withdrawn publications.

IEC Just Published - webstore.iec.ch/justpublished
Stay up to date on all new IEC publications. Just Published details all new publications released. Available online and also once a month by email.

Electropedia - www.electropedia.org
The world's leading online dictionary of electronic and electrical terms containing 20 000 terms and definitions in English and French, with equivalent terms in 16 additional languages. Also known as the International Electrotechnical Vocabulary (IEV) online.

IEC Glossary - std.iec.ch/glossary
65 000 electrotechnical terminology entries in English and French extracted from the Terms and Definitions clause of IEC publications issued since 2002. Some entries have been collected from earlier publications of IEC TC 37, 77, 86 and CISPR.

IEC Customer Service Centre - webstore.iec.ch/csc
If you wish to give us your feedback on this publication or need further assistance, please contact the Customer Service Centre: csc@iec.ch.

AVA Documents
Document Sharing Hub

Full document details: IEC 61851-21-1 2017

IEC 61851-21-1

Edition 1.0 2017-06

INTERNATIONAL STANDARD

colour inside

Electric vehicle conductive charging system –
Part 21-1: Electric vehicle on-board charger EMC requirements for conductive connection to an AC/DC supply

INTERNATIONAL
ELECTROTECHNICAL
COMMISSION

ICS 43.120

ISBN 978-2-8322-4432-6

Warning! Make sure that you obtained this publication from an authorized distributor.

® Registered trademark of the International Electrotechnical Commission

Documents
Document Sharing Hub

Full document details: IEC 61851-21-1 2017

CONTENTS

FOREWORD 5
1 Scope 7
2 Normative references 7
3 Terms and definitions 8
4 General test conditions 9
5 Test methods and requirements 10
5.1 General 10
5.1.1 Overview 10
5.1.2 Exceptions 10
5.2 Immunity 10
5.2.1 General 10
5.2.2 Function performance criteria 11
5.2.3 Test severity level 11
5.2.4 Immunity of vehicles to electrical fast transient/burst disturbances conducted along AC and DC power lines 12
5.2.5 Immunity of vehicles to surges conducted along AC and DC power lines 12
5.2.6 Immunity to electromagnetic radiated RF-fields 15
5.2.7 Immunity to pulses on supply lines 20
5.2.8 Immunity test and severity level overview 20
5.3 Emissions 23
5.3.1 Test conditions 23
5.3.2 Emissions of harmonics on AC power lines 23
5.3.3 Emission of voltage changes, voltage fluctuations and flicker on AC power lines 26
5.3.4 High-frequency conducted disturbances on AC or DC power lines 27
5.3.5 High-frequency conducted disturbances on network and telecommunication access 30
5.3.6 High-frequency radiated disturbances 32
5.3.7 Radiated disturbances on supply lines 37
Annex A (normative) Artificial networks, asymmetric artificial networks and integration of charging stations into the test setup 38
A.1 Overview 38
A.2 Charging station and power mains connection 38
A.3 Artificial networks (AN) 39
A.3.1 General 39
A.3.2 Low voltage (LV) powered component 39
A.3.3 High voltage (HV) powered component 40
A.3.4 Components involved in charging mode connected to DC power supply 42
A.4 Artificial mains networks (AMN) 43
A.5 Asymmetric artificial networks (AAN) 43
A.5.1 General 43
A.5.2 Symmetric communication lines (e.g. CAN) 43
A.5.3 PLC on power lines 44
A.5.4 PLC (technology) on control pilot 45
Bibliography 47

Figure 1 – Electrical fast transient/burst test vehicle setup 12

Documents
Document Sharing Hub

Full document details: IEC 61851-21-1 2017

Figure 2 – Vehicle in configuration "REESS charging mode coupled to the power grid" – coupling between lines for AC (single phase) and DC power lines 13
Figure 3 – Vehicle in configuration "REESS charging mode coupled to the power grid" – coupling between each line and earth for AC (single phase) and DC power lines 13
Figure 4 – Vehicle in configuration "REESS charging mode coupled to the power grid" – coupling between lines for AC (three phases) power lines 14
Figure 5 – Vehicle in configuration "REESS charging mode coupled to the power grid" – coupling between each line and earth for AC (three phases) power lines 14
Figure 6 – Example of test setup for vehicle with inlet located on the vehicle side (AC/DC power charging without communication) 16
Figure 7 – Example of test setup for vehicle with inlet located at the front/rear of the vehicle (AC/DC power charging without communication) 17
Figure 8 – Example of test setup for vehicle with inlet located on vehicle side (AC or DC power charging with communication) 18
Figure 9 – Example of test setup for vehicle with inlet located at the front/rear of the vehicle (AC or DC power charging with communication) 19
Figure 10 – Vehicle in configuration "REESS charging mode coupled to the power grid" – Single-phase charger test setup 25
Figure 11 – Vehicle in configuration "REESS charging mode coupled to the power grid" – Three-phase charger test setup 25
Figure 12 – Vehicle in configuration "REESS charging mode coupled to the power grid" 26
Figure 13 – Vehicle in configuration "REESS charging mode coupled to the power grid" 29
Figure 14 – Vehicle in configuration "REESS charging mode coupled to the power grid" 31
Figure 15 – Example of vehicle in configuration "REESS charging mode coupled to the power grid" 34
Figure 16 – Test configuration for ESAs involved in REESS charging mode coupled to the power grid (example for horn antenna) 36
Figure A.1 – Example of 5 μH AN schematic 39
Figure A.2 – Characteristics of the AN impedance 40
Figure A.3 – Example of 5 μH HV AN schematic 41
Figure A.4 – Characteristics of the HV AN impedance 41
Figure A.5 – Example of 5 μH HV AN combination in a single shielded box 42
Figure A.6 – Impedance matching network attached between HV ANs and EUT 42
Figure A.7 – Example of an impedance stabilization network for symmetric communication lines 44
Figure A.8 – Example of a circuit for emission tests of PLC on AC or DC powerlines 45
Figure A.9 – Example of a circuit for immunity tests of PLC on AC or DC powerlines 45
Figure A.10 – Example of a circuit for emission tests of PLC on control pilot line 46
Figure A.11 – Example of a circuit for immunity tests of PLC on control pilot line 46

Table 1 – Immunity tests 21
Table 2 – Maximum allowed harmonics (input current ≤ 16 A per phase) 24
Table 3 – Acceptable harmonics for R_{sce} = 33 (16 A < I_i ≤ 75 A) 24
Table 4 – Maximum allowed radiofrequency conducted disturbances on AC power lines 27
Table 5 – Maximum allowed radiofrequency conducted disturbances on DC power lines 28
Table 6 – Maximum allowed radiofrequency conducted disturbances on network and telecommunication access 30

AVA Documents
Document Sharing Hub
Full document details: IEC 61851-21-1 2017

Table 7 – Maximum allowed vehicle high-frequency radiated disturbances 32
Table 8 – Maximum allowed ESA high-frequency radiated disturbances 35
Table 9 – Maximum allowed ESA radiated disturbances on supply lines 37

Documents
Document Sharing Hub

Full document details: IEC 61851-21-1 2017

INTERNATIONAL ELECTROTECHNICAL COMMISSION

ELECTRIC VEHICLE CONDUCTIVE CHARGING SYSTEM –

Part 21-1: Electric vehicle on-board charger EMC requirements for conductive connection to an AC/DC supply

FOREWORD

1) The International Electrotechnical Commission (IEC) is a worldwide organization for standardization comprising all national electrotechnical committees (IEC National Committees). The object of IEC is to promote international co-operation on all questions concerning standardization in the electrical and electronic fields. To this end and in addition to other activities, IEC publishes International Standards, Technical Specifications, Technical Reports, Publicly Available Specifications (PAS) and Guides (hereafter referred to as "IEC Publication(s)"). Their preparation is entrusted to technical committees; any IEC National Committee interested in the subject dealt with may participate in this preparatory work. International, governmental and non-governmental organizations liaising with the IEC also participate in this preparation. IEC collaborates closely with the International Organization for Standardization (ISO) in accordance with conditions determined by agreement between the two organizations.
2) The formal decisions or agreements of IEC on technical matters express, as nearly as possible, an international consensus of opinion on the relevant subjects since each technical committee has representation from all interested IEC National Committees.
3) IEC Publications have the form of recommendations for international use and are accepted by IEC National Committees in that sense. While all reasonable efforts are made to ensure that the technical content of IEC Publications is accurate, IEC cannot be held responsible for the way in which they are used or for any misinterpretation by any end user.
4) In order to promote international uniformity, IEC National Committees undertake to apply IEC Publications transparently to the maximum extent possible in their national and regional publications. Any divergence between any IEC Publication and the corresponding national or regional publication shall be clearly indicated in the latter.
5) IEC itself does not provide any attestation of conformity. Independent certification bodies provide conformity assessment services and, in some areas, access to IEC marks of conformity. IEC is not responsible for any services carried out by independent certification bodies.
6) All users should ensure that they have the latest edition of this publication.
7) No liability shall attach to IEC or its directors, employees, servants or agents including individual experts and members of its technical committees and IEC National Committees for any personal injury, property damage or other damage of any nature whatsoever, whether direct or indirect, or for costs (including legal fees) and expenses arising out of the publication, use of, or reliance upon, this IEC Publication or any other IEC Publications.
8) Attention is drawn to the Normative references cited in this publication. Use of the referenced publications is indispensable for the correct application of this publication.
9) Attention is drawn to the possibility that some of the elements of this IEC Publication may be the subject of patent rights. IEC shall not be held responsible for identifying any or all such patent rights.

International Standard IEC 61851-21-1 has been prepared by subcommittee 69: Electric road vehicles and electric industrial trucks.

This first edition, together with IEC 61851-21-2, cancels and replaces IEC 61851-21:2001. It constitutes a technical revision.

This edition includes the following significant technical changes with respect to IEC 61851-21:2001:

a) this document addresses now only EMC tests instead of other electrical tests;
b) test setups are defined more precisely;
c) Annex A "Artificial networks, asymmetric artificial networks and integration of charging stations into the test setup" was added.

AVA Documents
Document Sharing Hub

Full document details: IEC 61851-21-1 2017

The text of this International Standard is based on the following documents:

FDIS	Report on voting
69/507/FDIS	69/516/RVD

Full information on the voting for the approval of this International Standard can be found in the report on voting indicated in the above table.

This document has been drafted in accordance with the ISO/IEC Directives, Part 2.

A list of all parts of the IEC 61851 series, under the general title: *Electric vehicle conductive charging system,* can be found on the IEC website.

The committee has decided that the contents of this document will remain unchanged until the stability date indicated on the IEC website under "http://webstore.iec.ch" in the data related to the specific document. At this date, the document will be

- reconfirmed,
- withdrawn,
- replaced by a revised edition, or
- amended.

A bilingual version of this publication may be issued at a later date.

IMPORTANT – The 'colour inside' logo on the cover page of this publication indicates that it contains colours which are considered to be useful for the correct understanding of its contents. Users should therefore print this document using a colour printer.

Documents
Document Sharing Hub

Full document details: IEC 61851-21-1 2017

ELECTRIC VEHICLE CONDUCTIVE CHARGING SYSTEM –

Part 21-1: Electric vehicle on-board charger EMC requirements for conductive connection to an AC/DC supply

1 Scope

This part of IEC 61851, together with IEC 61851-1:2010, gives requirements for conductive connection of an electric vehicle (EV) to an AC or DC supply. It applies only to on-board charging units either tested on the complete vehicle or tested on the charging system component level (ESA – electronic sub assembly).

This document covers the electromagnetic compatibility (EMC) requirements for electrically propelled vehicles in any charging mode while connected to the mains supply.

This document is not applicable to trolley buses, rail vehicles, industrial trucks and vehicles designed primarily to be used off-road, such as forestry and construction machines.

NOTE 1 Specific safety requirements that apply to equipment on the vehicle during charging are treated in separate documents as indicated in the corresponding clauses of this document.

NOTE 2 Electric vehicle (EV) includes pure electric vehicles as well as plug-in hybrid electric vehicles with additional combustion engine.

2 Normative references

The following documents are referred to in the text in such a way that some or all of their content constitutes requirements of this document. For dated references, only the edition cited applies. For undated references, the latest edition of the referenced document (including any amendments) applies.

IEC 60038:2009, *IEC standard voltages*

IEC 61000-3-2:2014, *Electromagnetic compatibility (EMC) – Part 3-2: Limits – Limits for harmonic current emissions (equipment input current ≤ 16 A per phase)*

IEC 61000-3-3:2013, *Electromagnetic compatibility (EMC) – Part 3-3: Limits – Limitation of voltage changes, voltage fluctuations and flicker in public low-voltage supply systems, for equipment with rated current ≤ 16 A per phase and not subject to conditional connection*

IEC 61000-3-11:2000, *Electromagnetic compatibility (EMC) – Part 3-11 – Limits – Limitation of voltage changes, voltage fluctuations and flicker in public low-voltage supply systems – Equipment with rated current ≤ 75 A and subject to conditional connection*

IEC 61000-3-12:2011, *Electromagnetic compatibility (EMC) – Part 3-12 – Limits for harmonic currents produced by equipment connected to public low-voltage systems with input current > 16 A and ≤ 75 A per phase*

IEC 61000-4-4:2012, *Electromagnetic compatibility (EMC) – Part 4-4: Testing and measurement techniques – Electrical fast transient/burst immunity test*

IEC 61000-4-5:2014, *Electromagnetic compatibility (EMC) – Part 4-5: Testing and measurement techniques – Surge immunity test*

AVA Documents
Document Sharing Hub

Full document details: IEC 61851-21-1 2017

IEC 61000-6-3:2006, *Electromagnetic compatibility (EMC) – Part 6-3: Generic standards – Emission standard for residential, commercial and light-industrial environments*
IEC 61000-6-3:2006/AMD1:2010

IEC 61851-1:2010, *Electric vehicle conductive charging system – Part 1: General requirements*

CISPR 12:2007, *Vehicles, boats and internal combustion engines – Radio disturbance characteristics – Limits and methods of measurement for the protection of off-board receivers*
CISPR 12:2007/AMD1:2009

CISPR 16-1-2:2014, *Specification for radio disturbance and immunity measuring apparatus and methods – Part 1-2: Radio disturbance and immunity measuring apparatus – Coupling devices for conducted disturbance measurements*

CISPR 16-2-1:2014, *Specification for radio disturbance and immunity measuring apparatus and methods – Part 2-1: Methods of measurement of disturbances and immunity – Conducted disturbance measurements*

CISPR 22:2008, *Information technology equipment – Radio disturbance characteristics – Limits and methods of measurement*

CISPR 25:2016, *Vehicles, boats and internal combustion engines – Radio disturbance characteristics – Limits and methods of measurement for the protection of on-board receivers*

ISO/TR 8713:2012, *Electrically propelled road vehicles – Vocabulary*

ISO 7637-2:2011, *Road vehicles – Electrical disturbances from conduction and coupling -- Part 2: Electrical transient conduction along supply lines only*

ISO 11451-1:2015, *Road vehicles – Vehicle test methods for electrical disturbances from narrowband radiated electromagnetic energy – Part 1: General principles and terminology*

ISO 11451-2:2015, *Road vehicles – Vehicle test methods for electrical disturbances from narrowband radiated electromagnetic energy – Part 2: Off-vehicle radiation sources*

ISO 11452-1:2015, *Road vehicles – Component test methods for electrical disturbances from narrowband radiated electromagnetic energy – Part 1: General principles and terminology*

ISO 11452-2:2004, *Road vehicles – Component test methods for electrical disturbances from narrowband radiated electromagnetic energy – Part 2: Absorber-lined shielded enclosure*

ISO 11452-4:2011, *Road vehicles – Component test methods for electrical disturbances from narrowband radiated electromagnetic energy – Part 4: Harness excitation methods*

3 Terms and definitions

For the purposes of this document, the terms and definitions given in IEC 61851-1:2010 and ISO/TR 8713:2012, as well as the following apply.

ISO and IEC maintain terminological databases for use in standardization at the following addresses:

- IEC Electropedia: available at http://www.electropedia.org/
- ISO Online browsing platform: available at http://www.iso.org/obp

Documents
Document Sharing Hub

Full document details: IEC 61851-21-1 2017

3.1
REESS
rechargeable energy storage system that provides electric energy for electric propulsion of the vehicle

3.2
on-board EV charging system
all equipment in the charge power supply chain inside the vehicle

Note 1 to entry: It includes the plug and cable if physically connected to the vehicle (cable cannot be removed without any tool, i.e. case A as defined in IEC 61851-1:2010).

3.3
electrical/electronic sub-assembly
ESA
electrical and/or electronic device or set(s) of devices intended to be part of a vehicle, together with any associated electrical connections and wiring, which performs one or more specialized functions

3.4
low voltage
LV
operating DC voltage below 60 V

EXAMPLE Nominal voltages of 12 V, 24 V, 48 V.

3.5
LV harness
low voltage harness with operating voltages below 60 V

3.6
high voltage
HV
operating voltages of 60 V to 1000 V

Note 1 to entry: HV+ and HV- are abbreviations for the positive and negative terminal line, respectively.

Note 2 to entry: HV definition is in accordance to CISPR 25, ISO 11451-1 and ISO 11452-1.

3.7
electric vehicle
EV
pure electric vehicles as well as plug-in hybrid electric vehicles with additional combustion engine

4 General test conditions

The vehicle systems shall operate correctly within +10 % to –15 % of the standard nominal supply voltage. This takes into account variations that are induced by the installation as defined in Annex A of IEC 60038:2009. The rated value of the frequency is 50 Hz ± 1 % or 60 Hz ± 1 %.

NOTE IEC 60038:2009 specifies the voltage at the delivery point. Annex A proposes to specify wider values to allow for further voltage variations due to installations.

Test methods concern only the electric vehicle charging system with "REESS in charging mode coupled to the power grid". Tests shall be performed either on separate samples or on the whole vehicle at the vehicle manufacturer's request as defined in the test plan.

The vehicle shall be in an unladen condition except for necessary test equipment.

Documents
Document Sharing Hub
Full document details: IEC 61851-21-1 2017

The vehicle shall be immobilized, engine OFF, and in charging mode.

All other equipment which can be switched on permanently by the driver or passenger shall be OFF.

The tests shall be carried out with the equipment under test (EUT) or any movable part of it placed in the most unfavourable position as defined in the test plan.

Unless otherwise specified, the tests shall be carried out in a draught-free location and at an ambient temperature of 23 °C ± 5 °C according to ISO 11451-1:2015 and ISO 11452-1:2015.

5 Test methods and requirements

5.1 General

5.1.1 Overview

All tests shall be carried out using the charging cable specified or provided by the electric vehicle supply equipment (EVSE) manufacturer or the electric vehicle manufacturer as described in further detail in the test plan, for example cable lengths.

If the charging cable is provided by the vehicle manufacturer the extraneous length shall be z-folded in 0,5 m width.

The artificial (mains) networks (AN/AMN) for power supply and asymmetric artificial networks (AAN) for charging communications to be used for these tests are described in Annex A.

For electrical/electronic sub-assembly (ESA) separated on-board charger tests an appropriate load shall be used to simulate the vehicle HV-systems terminations, for example HV battery. If specific load boxes are used, these shall also be described in the test plan.

5.1.2 Exceptions

Vehicles and/or ESA which are intended to be used in "REESS charging mode coupled to the power grid" in the configuration connected to a DC-charging station with a length of a DC network cable shorter than 30 m do not have to fulfil the requirements of conducted emissions, surge and fast transients (burst) neither on vehicle nor ESA level.

In this case, the manufacturer shall provide a statement that the vehicle and/or ESA can be used in "REESS charging mode coupled to the power grid" only with cables shorter than 30 m. This information shall be made publicly available following the type approval.

Vehicles and/or ESA which are intended to be used in "REESS charging mode coupled to the power grid" in the configuration connected to a local/private DC-charging station without additional participants do not have to fulfil requirements of conducted emissions, surge and fast transients (burst) neither on vehicle nor ESA level.

In this case, the manufacturer shall provide a statement that the vehicle and/or ESA can be used in "REESS charging mode coupled to the power grid" only with a local/private DC charging station without additional participants. This information shall be made publicly available following the type approval.

5.2 Immunity

5.2.1 General

The tests shall be carried out individually as single tests in sequence. The tests may be performed in any order.

AVA Documents
Document Sharing Hub

Full document details: IEC 61851-21-1 2017

In general, the EUT shall be tested in configuration "REESS in charging mode coupled to the power grid".

If the current consumption can be adjusted, the current shall be set to at least 20 % of its nominal value.

If the current consumption cannot be adjusted, the REESS state of charge (SOC) shall be kept between 20 % and 80 % of the maximum SOC during the whole time duration of the measurement

NOTE This may lead to split the measurement in different time slots/sub-bands with the need to discharge the vehicle's traction battery before starting the next time slot/ sub-band.

The EUT shall be switched on and shall operate as defined in the test plan.

The description of the test, relevant generator, appropriate methods, and the setup to be used are given in the basic standards, which are referred to in Table 1.

The contents of these basic standards are not repeated here, however modifications or additional information needed for the practical application of the tests are given in this document.

Only non-disturbing equipment shall be used while monitoring the vehicle or ESA. The vehicle exterior and the passenger compartment/ESA shall be monitored to determine whether the requirements are met (e.g. for vehicle test by using (a) video camera(s), a microphone, etc.).

The electric vehicle shall not become dangerous or unsafe as a result of the application of the tests defined in this document.

5.2.2 Function performance criteria

Subclause 5.2.2 defines the expected performance objectives for the function of the vehicle subjected to the test conditions. The performance criteria of the function (expected behaviour of the function observed during test) are listed below.

NOTE This element is applicable to every single individual function of an equipment under test and describes the operational status of the defined function during and after a test.

Performance criterion A: The vehicle shall not be set in motion. The charging function shall continue to operate as intended during and after the test. No degradation of performance or loss of function is allowed.

Performance criterion B: The vehicle shall not be set in motion. The charging function shall continue to operate as intended after the test. No degradation of performance or loss of function is allowed after the test. During the test temporary loss of charging function is allowed provided the charging function is restored automatically without user interaction.

Performance criterion C: The vehicle shall not be set in motion. Temporary loss of function is allowed, provided the function can be restored by simple operations of the controls and without the use of tools, by the user of the equipment or operator from remote position.

5.2.3 Test severity level

This defines the specification of test severity level of essential signal parameters. The test severity level is the stress level applied to the equipment under test for any given test method. The test severity levels depend on the required operational characteristics of the function. Test severity levels are given in Table 1.

Documents
Document Sharing Hub

Full document details: IEC 61851-21-1 2017

5.2.4 Immunity of vehicles to electrical fast transient/burst disturbances conducted along AC and DC power lines

5.2.4.1 General

EV charging equipment directly powered by the AC power lines and DC power lines shall withstand common mode conducted disturbances to levels given in Table 1, generally caused by the switching of small inductive loads, relay contacts bouncing, or switching of high-voltage switchgear.

5.2.4.2 Electric vehicle charging equipment test

This test is intended to demonstrate the immunity of the vehicle electronic systems network according to IEC 61000-4-4:2012. The electric vehicle charging equipment shall be subject to electrical fast transient/burst disturbances conducted along AC and DC power lines of the vehicle as described in 5.2.5.2. The vehicle shall be monitored during the tests.

The test setup is depicted in Figure 1.

The vehicle shall be placed directly on the ground plane. The cable shall be z-folded in less than 0,5 m width if longer than 1 m, placed 0,1 (± 0,025) m above the ground plane and at least 0,1 m away from the car body.

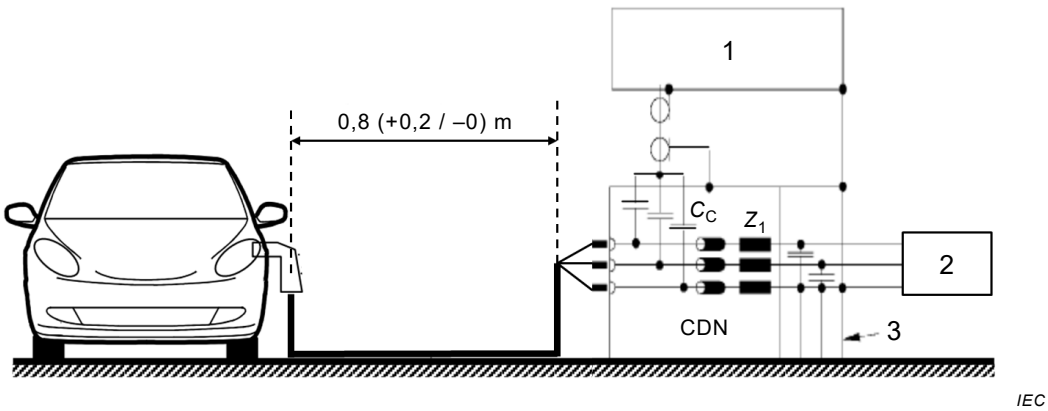

Key

1 EFT/burst-generator

2 AC/DC/mains

3 filter

Figure 1 – Electrical fast transient/burst test vehicle setup

5.2.4.3 ESA, separated on-board charger test

The test procedure according to IEC 61000-4-4:2012 shall be applied to separated on-board charger tests.

The enclosure of ESA need not be bonded to ground plane directly.

5.2.5 Immunity of vehicles to surges conducted along AC and DC power lines

5.2.5.1 General

On-board EV charging equipment directly powered by the AC power mains shall withstand the voltage surges, generally caused by switching phenomena in the power grid, faults or lightning strokes (indirect strokes) as described in Table 1.

Documents
Document Sharing Hub
Full document details: IEC 61851-21-1 2017

The test equipment is composed of a reference ground plane (a shielded room is not required), a surge generator and a coupling/decoupling network (CDN).

5.2.5.2 Electric vehicle charging system test

This test is intended to demonstrate the immunity of the vehicle electronic systems according to IEC 61000-4-5:2014. The vehicle shall be subject to surges conducted along AC and DC power lines of the vehicle. The vehicle shall be monitored during the tests.

NOTE If transmitters being part of authorization and payment process might not be switched off during charging, then transmitter-specific standard applies (e.g. 3G, 4G, RFID).

The vehicle shall be positioned on the ground plane. The electrical surge shall be applied on the vehicle on the AC and DC power lines between each line and earth and between lines by using CDN as described in Figures 2 to 5.

The cable shall be z-folded in less than 0,5 m width if longer than 1 m, placed 0,1 (± 0,025) m above the ground plane and at least 0,1 m away from the car body.

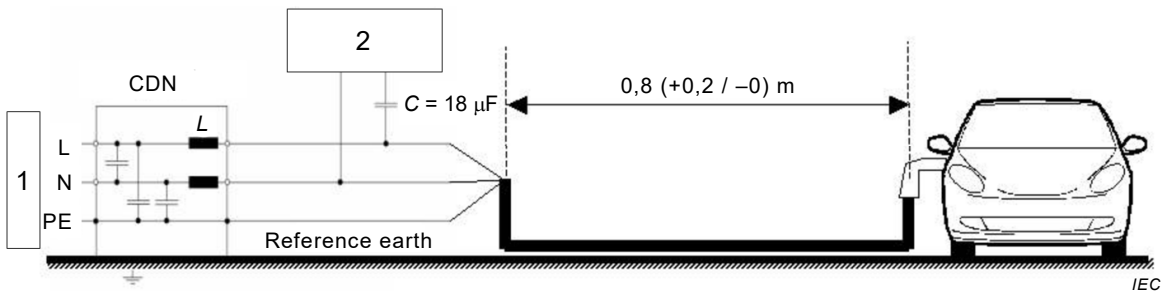

Key

1 surge-generator

2 AC/DC/mains

3 filter

Figure 2 – Vehicle in configuration "REESS charging mode coupled to the power grid" – coupling between lines for AC (single phase) and DC power lines

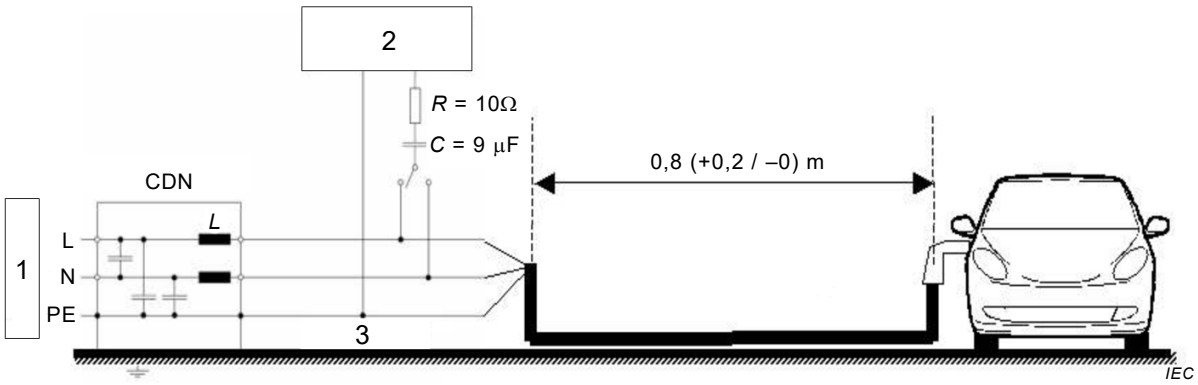

Key

1 surge-generator

2 AC/DC/mains

3 filter

Figure 3 – Vehicle in configuration "REESS charging mode coupled to the power grid" – coupling between each line and earth for AC (single phase) and DC power lines

Documents
Document Sharing Hub
Full document details: IEC 61851-21-1 2017

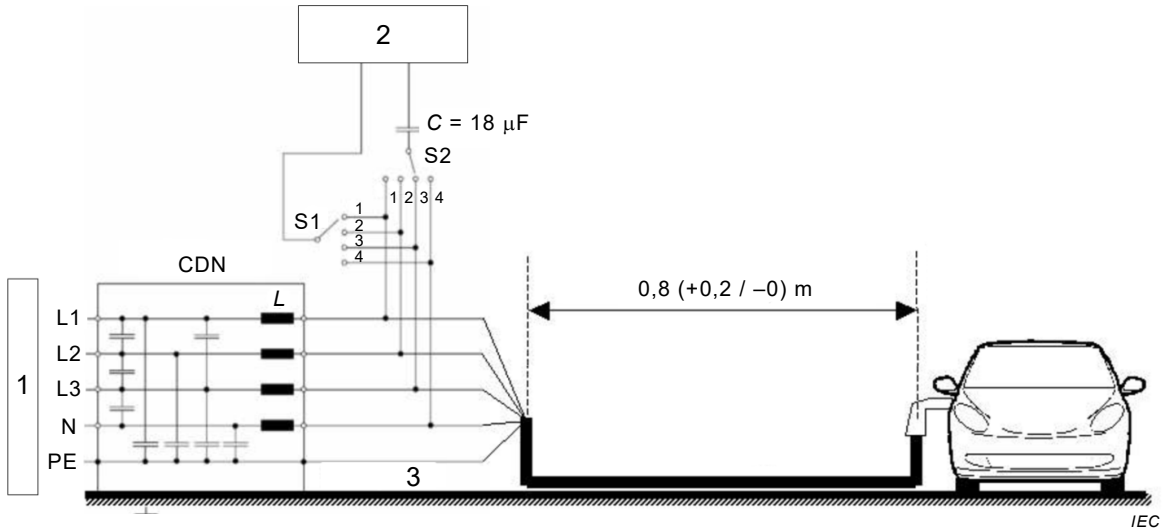

Key

1 surge-generator

2 AC/mains

3 filter

Figure 4 – Vehicle in configuration "REESS charging mode coupled to the power grid" – coupling between lines for AC (three phases) power lines

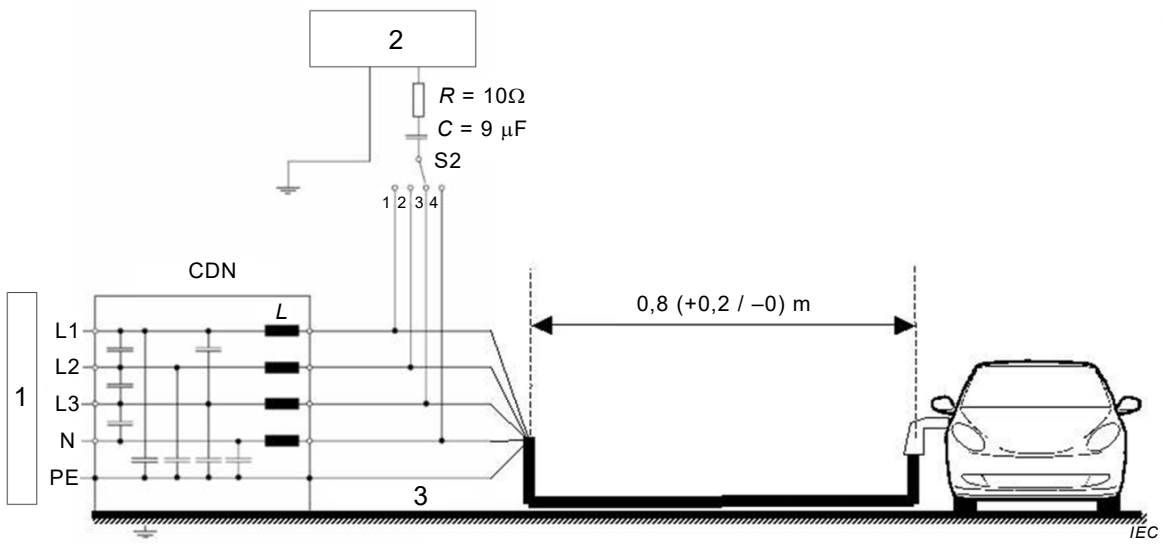

Key

1 surge-generator

2 AC/mains

3 filter

Figure 5 – Vehicle in configuration "REESS charging mode coupled to the power grid" – coupling between each line and earth for AC (three phases) power lines

5.2.5.3 ESA, separated on-board charger test

The test procedure according to IEC 61000-4-5:2014 shall be applied to separated on-board charger tests. The enclosure of ESA need not be bonded to ground plane directly.

Documents
Document Sharing Hub
Full document details: IEC 61851-21-1 2017