IEC 61857-21

Edition 3.0 2009-05

INTERNATIONAL STANDARD

NORME INTERNATIONALE

Electrical insulation systems – Procedures for thermal evaluation – Part 21: Specific requirements for general-purpose models – Wire-wound applications

Systèmes d'isolation électrique – Procédures d'évaluation thermique – Partie 21: Exigences particulières pour les modèles d'usage général – Applications aux enroulements à fil

IEC 61857-21:2009

Documents
Document Sharing Hub

Full document details: IEC 61857-21 2009

THIS PUBLICATION IS COPYRIGHT PROTECTED

Copyright © 2009 IEC, Geneva, Switzerland

All rights reserved. Unless otherwise specified, no part of this publication may be reproduced or utilized in any form or by any means, electronic or mechanical, including photocopying and microfilm, without permission in writing from either IEC or IEC's member National Committee in the country of the requester.
If you have any questions about IEC copyright or have an enquiry about obtaining additional rights to this publication, please contact the address below or your local IEC member National Committee for further information.

Droits de reproduction réservés. Sauf indication contraire, aucune partie de cette publication ne peut être reproduite ni utilisée sous quelque forme que ce soit et par aucun procédé, électronique ou mécanique, y compris la photocopie et les microfilms, sans l'accord écrit de la CEI ou du Comité national de la CEI du pays du demandeur.
Si vous avez des questions sur le copyright de la CEI ou si vous désirez obtenir des droits supplémentaires sur cette publication, utilisez les coordonnées ci-après ou contactez le Comité national de la CEI de votre pays de résidence.

IEC Central Office
3, rue de Varembé
CH-1211 Geneva 20
Switzerland
Email: inmail@iec.ch
Web: www.iec.ch

About the IEC

The International Electrotechnical Commission (IEC) is the leading global organization that prepares and publishes International Standards for all electrical, electronic and related technologies.

About IEC publications

The technical content of IEC publications is kept under constant review by the IEC. Please make sure that you have the latest edition, a corrigenda or an amendment might have been published.

- Catalogue of IEC publications: www.iec.ch/searchpub
The IEC on-line Catalogue enables you to search by a variety of criteria (reference number, text, technical committee,…). It also gives information on projects, withdrawn and replaced publications.
- IEC Just Published: www.iec.ch/online_news/justpub
Stay up to date on all new IEC publications. Just Published details twice a month all new publications released. Available on-line and also by email.
- Electropedia: www.electropedia.org
The world's leading online dictionary of electronic and electrical terms containing more than 20 000 terms and definitions in English and French, with equivalent terms in additional languages. Also known as the International Electrotechnical Vocabulary online.
- Customer Service Centre: www.iec.ch/webstore/custserv
If you wish to give us your feedback on this publication or need further assistance, please visit the Customer Service Centre FAQ or contact us:
Email: csc@iec.ch
Tel.: +41 22 919 02 11
Fax: +41 22 919 03 00

A propos de la CEI

La Commission Electrotechnique Internationale (CEI) est la première organisation mondiale qui élabore et publie des normes internationales pour tout ce qui a trait à l'électricité, à l'électronique et aux technologies apparentées.

A propos des publications CEI

Le contenu technique des publications de la CEI est constamment revu. Veuillez vous assurer que vous possédez l'édition la plus récente, un corrigendum ou amendement peut avoir été publié.

- Catalogue des publications de la CEI: www.iec.ch/searchpub/cur_fut-f.htm
Le Catalogue en-ligne de la CEI vous permet d'effectuer des recherches en utilisant différents critères (numéro de référence, texte, comité d'études,…). Il donne aussi des informations sur les projets et les publications retirées ou remplacées.
- Just Published CEI: www.iec.ch/online_news/justpub
Restez informé sur les nouvelles publications de la CEI. Just Published détaille deux fois par mois les nouvelles publications parues. Disponible en-ligne et aussi par email.
- Electropedia: www.electropedia.org
Le premier dictionnaire en ligne au monde de termes électroniques et électriques. Il contient plus de 20 000 termes et définitions en anglais et en français, ainsi que les termes équivalents dans les langues additionnelles. Egalement appelé Vocabulaire Electrotechnique International en ligne.
- Service Clients: www.iec.ch/webstore/custserv/custserv_entry-f.htm
Si vous désirez nous donner des commentaires sur cette publication ou si vous avez des questions, visitez le FAQ du Service clients ou contactez-nous:
Email: csc@iec.ch
Tél.: +41 22 919 02 11
Fax: +41 22 919 03 00

Documents
Document Sharing Hub

Full document details: IEC 61857-21 2009

IEC 61857-21

Edition 3.0 2009-05

INTERNATIONAL STANDARD

NORME INTERNATIONALE

Electrical insulation systems – Procedures for thermal evaluation – Part 21: Specific requirements for general-purpose models – Wire-wound applications

Systèmes d'isolation électrique – Procédures d'évaluation thermique – Partie 21: Exigences particulières pour les modèles d'usage général – Applications aux enroulements à fil

INTERNATIONAL
ELECTROTECHNICAL
COMMISSION

COMMISSION
ELECTROTECHNIQUE
INTERNATIONALE

PRICE CODE
CODE PRIX

P

ICS 29.080.30

ISBN 978-2-88910-582-3

® Registered trademark of the International Electrotechnical Commission
Marque déposée de la Commission Electrotechnique Internationale

Documents
Document Sharing Hub

Full document details: IEC 61857-21 2009

CONTENTS

FOREWORD ... 3
INTRODUCTION ... 5
1 Scope ... 6
2 Normative references ... 6
3 Terms and definitions ... 6
4 Construction ... 7
4.1 General information ... 7
4.2 Model components ... 8
4.3 Assembly of the model ... 11
5 Number of test objects ... 12
6 Test procedure ... 12
6.1 General ... 12
6.2 Initial screening test ... 12
6.2.1 General ... 12
6.2.2 Initial dielectric test ... 12
6.3 Thermal endurance test ... 13
6.3.1 Endurance test cycle ... 13
6.3.2 Thermal ageing ... 13
6.3.3 Mechanical stress ... 13
6.3.4 Thermal shock ... 13
6.3.5 Moisture exposure ... 14
6.3.6 Dielectric diagnostic test ... 14
7 End-of-life criterion ... 14
8 Analysing, reporting and classification ... 15
Bibliography ... 16

Figure 1 – Photos of GPM and GPM-TC test objects ... 7
Figure 2 – Schematic drawing of a GPM frame ... 9
Figure 3 – Manufacturing drawing of a GPM-TC frame ... 10

Table 1 – Initial dielectric test ... 13
Table 2 – Dielectric diagnostic test ... 14

Documents
Document Sharing Hub

Full document details: IEC 61857-21 2009

INTERNATIONAL ELECTROTECHNICAL COMMISSION

ELECTRICAL INSULATION SYSTEMS – PROCEDURES FOR THERMAL EVALUATION –

Part 21: Specific requirements for general-purpose models – Wire-wound applications

FOREWORD

1) The International Electrotechnical Commission (IEC) is a worldwide organization for standardization comprising all national electrotechnical committees (IEC National Committees). The object of IEC is to promote international co-operation on all questions concerning standardization in the electrical and electronic fields. To this end and in addition to other activities, IEC publishes International Standards, Technical Specifications, Technical Reports, Publicly Available Specifications (PAS) and Guides (hereafter referred to as "IEC Publication(s)"). Their preparation is entrusted to technical committees; any IEC National Committee interested in the subject dealt with may participate in this preparatory work. International, governmental and non-governmental organizations liaising with the IEC also participate in this preparation. IEC collaborates closely with the International Organization for Standardization (ISO) in accordance with conditions determined by agreement between the two organizations.
2) The formal decisions or agreements of IEC on technical matters express, as nearly as possible, an international consensus of opinion on the relevant subjects since each technical committee has representation from all interested IEC National Committees.
3) IEC Publications have the form of recommendations for international use and are accepted by IEC National Committees in that sense. While all reasonable efforts are made to ensure that the technical content of IEC Publications is accurate, IEC cannot be held responsible for the way in which they are used or for any misinterpretation by any end user.
4) In order to promote international uniformity, IEC National Committees undertake to apply IEC Publications transparently to the maximum extent possible in their national and regional publications. Any divergence between any IEC Publication and the corresponding national or regional publication shall be clearly indicated in the latter.
5) IEC provides no marking procedure to indicate its approval and cannot be rendered responsible for any equipment declared to be in conformity with an IEC Publication.
6) All users should ensure that they have the latest edition of this publication.
7) No liability shall attach to IEC or its directors, employees, servants or agents including individual experts and members of its technical committees and IEC National Committees for any personal injury, property damage or other damage of any nature whatsoever, whether direct or indirect, or for costs (including legal fees) and expenses arising out of the publication, use of, or reliance upon, this IEC Publication or any other IEC Publications.
8) Attention is drawn to the Normative references cited in this publication. Use of the referenced publications is indispensable for the correct application of this publication.
9) Attention is drawn to the possibility that some of the elements of this IEC Publication may be the subject of patent rights. IEC shall not be held responsible for identifying any or all such patent rights.

International Standard IEC 61857-21 has been prepared by IEC technical committee 112: Evaluation and qualification of electrical insulating materials and systems.

This third edition cancels and replaces the second edition published in 2004, and constitutes editorial revisions to make this standard compatible with Parts 1 and 22.

The text of this standard is based on the following documents:

FDIS	Report on voting
112/120/FDIS	112/126/RVD

Full information on the voting for the approval of this standard can be found in the report on voting indicated in the above table.

Documents
Document Sharing Hub

Full document details: IEC 61857-21 2009

This publication has been drafted in accordance with the ISO/IEC Directives, Part 2.

A list of all the parts in the IEC 61857 series, under the general title *Electrical insulation systems – Procedures for thermal evaluation*, can be found on the IEC website.

The committee has decided that the contents of this publication will remain unchanged until the maintenance result date indicated on the IEC web site under "http://webstore.iec.ch" in the data related to the specific publication. At this date, the publication will be

- reconfirmed,
- withdrawn,
- replaced by a revised edition, or
- amended.

Documents
Document Sharing Hub

Full document details: IEC 61857-21 2009

INTRODUCTION

A series of parts that will make up IEC 61857 is currently being developed, each of which will address a specific test object and/or application with an associated test procedure.

Documents
Document Sharing Hub

Full document details: IEC 61857-21 2009

ELECTRICAL INSULATION SYSTEMS – PROCEDURES FOR THERMAL EVALUATION –

Part 21: Specific requirements for general-purpose models – Wire-wound applications

1 Scope

This part of IEC 61857 describes a general-purpose model (GPM) and a tall channel alternative model (GPM-TC) which can be used for the evaluation of wire-wound electrical insulation systems (EIS) where specific electrotechnical products are not available or required.

2 Normative references

The following referenced documents are indispensable for the application of this document. For dated references, only the edition cited applies. For undated references, the latest edition of the referenced document (including any amendments) applies.

IEC 60455 (all parts), *Resin based reactive compounds used for electrical insulation*

IEC 60464: (all parts), *Varnishes used for electrical insulation*

IEC 60505, *Evaluation and qualification of electrical insulation systems*

IEC 61857-1, 2008, *Electrical insulation systems – Procedures for thermal evaluation – Part 1: General requirements – Low-voltage*

3 Terms and definitions

For the purposes of this document, the terms and definitions given in IEC 60505 and IEC 61857-1, as well as the following definitions, apply.

3.1
earth
ground
make an electric connection between a given point in a system, an installation or in equipment and a local earth

[IEV 195-01-08]

3.2
earth (ground) insulation
electrical insulating material (EIM) between a coil and earthed metal

3.3
coil
continuous winding of insulated wire

3.4
coil-to-coil insulation
electrical insulating material (EIM) between individual coils

Documents
Document Sharing Hub

Full document details: IEC 61857-21 2009

4 Construction

4.1 General information

General-purpose models are useful in evaluating the compatibility of the electrical insulation materials (EIM) being used in a candidate electrical insulation system (EIS). A GPM is not capable of simulating the influence of actual manufacturing processes such as winding techniques. Consequently, the influence of the manufacturing processes will be minimal. A GPM may be assembled by hand, using simple facilities.

The essential components of general-purpose models are either two coils (GPM) or three coils (GPM-TC) mounted in the same pair of channels, thus representing the windings in the window of a transformer, or the windings in the slots of a motor or generator, and EIM placed between the pairing(s) of coils and the coil-to-frame location representing coil-to-coil insulation and earth insulation, respectively (see Figure 1).

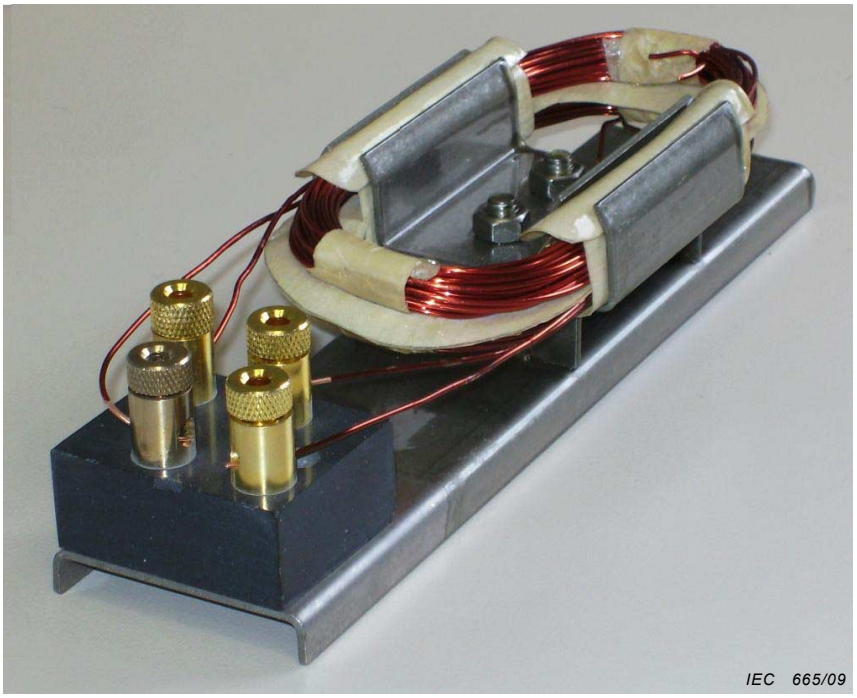

NOTE The additional height of the channel area in the GPM-TC allows for evaluation of three coils of winding wire and the extra pair of stand-offs allows for electrical testing of the additional coil.

Figure 1 – GPM test object

The channels, representative of the laminations in an electrotechnical product, shall be formed of stainless steel plates in an appropriate manner and fixed to the base. One or more EIM and/or different thicknesses of EIM may be used as earth insulation in the construction. Two insulators for each coil shall be fixed to the base.

The coils shall be wound with two winding wires in parallel (bifilar winding). The sets of windings should fill the channels. Each coil may be wound with a different type of winding wire and each type of winding wire shall be in contact with the earth insulation and coil-to-coil insulation. The coils shall be connected to the insulators so as to facilitate the dielectric testing from coil-to-frame, coil-to-coil and conductor-to-conductor.

Refer to Figure 2 for the principles of construction of the GPM and to Figure 3 for the principles of construction of the GPM-TC.

Documents
Document Sharing Hub
Full document details: IEC 61857-21 2009

4.2 Model components

The components of the model are as follows:

a) Frame:

The frame consists of a rigid supporting metal base with suitable stand-off insulators of porcelain or other appropriate material bolted to one end, and with two channels, formed by an inner and outer sheet, bolted to the other end. See Figure 2 or 3 for specific dimensions. The supporting base has holes for mounting the model during application of mechanical stress (vibration). The assembled channel portion contains two or three coils insulated from the frame by earth insulation, insulated from each other by coil-to-coil insulation and held in place by channel wedges.

b) Coils:

Each coil shall be wound with parallel winding wires for the conductor-to-conductor dielectric test. Coils may be machine-wound, or hand-wound on pins or forms. The ends of the parallel windings shall be isolated to allow conductor-to-conductor testing.

When the GPM-TC is being used to evaluate more than one type of winding wire, the EIM being evaluated as coil-to-coil insulation must be placed such that each EIM is in contact with each type of winding wire.

c) Winding wire:

Heavy film-coated. A wire size with a nominal diameter of 1,0 mm to 1,12 mm is preferred.

d) EIM:

EIM is used as earth insulation in the channel and as coil-to-coil insulation. EIM qualified as either earth insulation or coil-to-coil insulation in an EIS may be used in either case. EIM shall represent the thickness to be evaluated. EIM placed between the coils shall be of sufficient width to provide a complete insulation barrier between the coils. The EIM in the semicircular section shall be shaped, by cutting or other technique, to follow the curve of the coils and extend wider than the width of the wire wound coils. When the GPM-TC is being used to evaluate the performance of two sets of EIM, it is essential for each type of EIM to be in contact with each type of winding wire. If the EIM placed between the top and middle coils is not the same as that placed between the middle and bottom coils, then the winding wire placed into the top coil shall be the same as is placed into the bottom coil. The middle coil may be wound with an alternate winding wire.

e) Channel wedge:

The wedges shall be of sufficient stiffness to contain the coils in the channel. One end of the wedge shall be rounded to ensure easy passage through the channel.

f) Tie cord and/or electrical grade tape.

g) Electrical insulating varnish or resin, if a component of the EIS, shall conform to either IEC 60455 or IEC 60464.

Documents
Document Sharing Hub
Full document details: IEC 61857-21 2009

Dimensions in millimetres ± 10 %

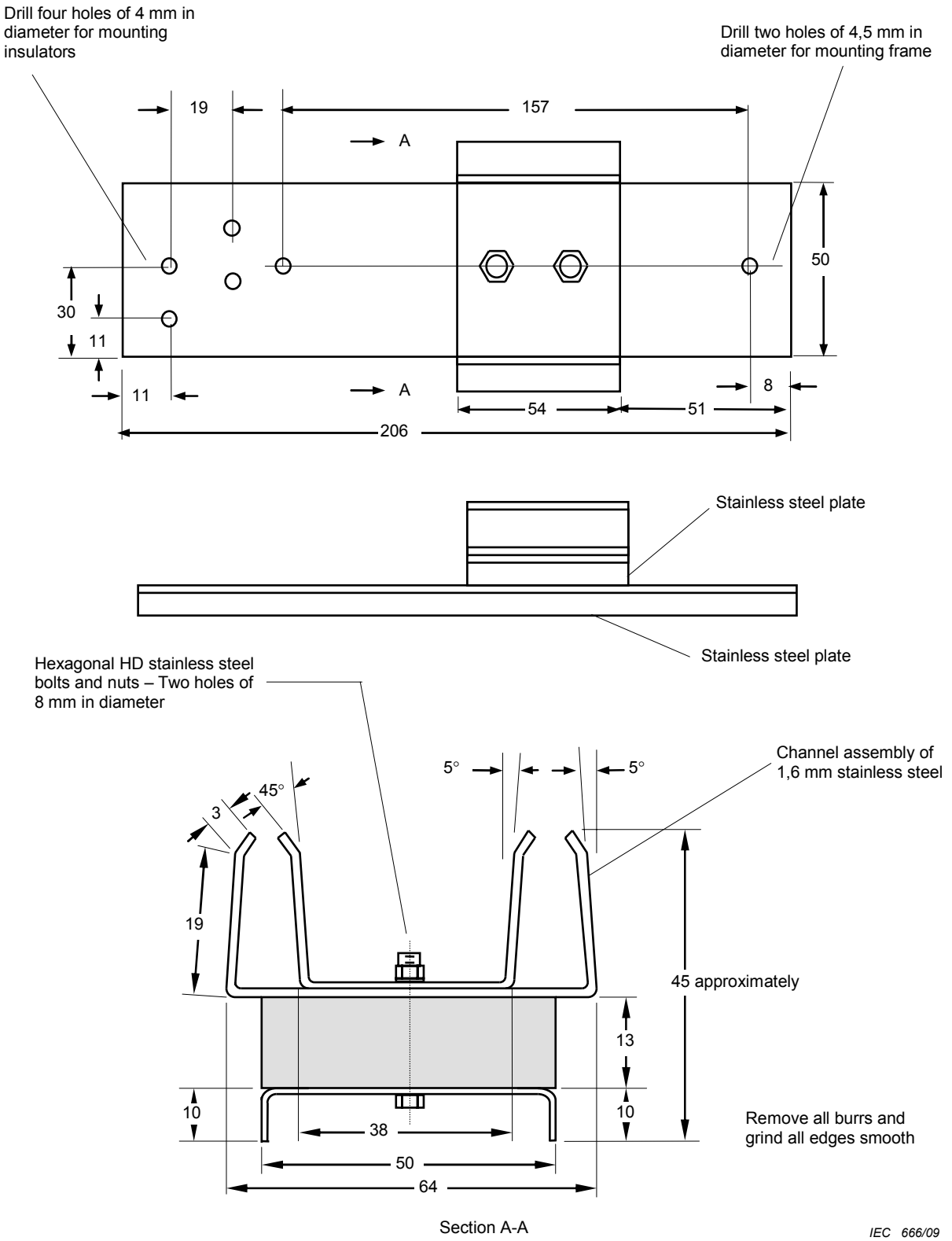

Figure 2 – Schematic drawing of a GPM frame

Documents
Document Sharing Hub
Full document details: IEC 61857-21 2009