IEC 62024-2

Edition 3.0 2024-12

INTERNATIONAL STANDARD

NORME INTERNATIONALE

High frequency inductive components – Electrical characteristics and measuring methods –
Part 2: Rated current of inductors for DC-to-DC converters

Composants inductifs à haute fréquence – Caractéristiques électriques et méthodes de mesure –
Part 2: Courant assigné des bobines d'inductance pour les convertisseurs continu-continu

IEC 62024-2:2024-12(en-fr)

Documents
Document Sharing Hub

Full document details: IEC 62024-2 2024

THIS PUBLICATION IS COPYRIGHT PROTECTED
Copyright © 2024 IEC, Geneva, Switzerland

All rights reserved. Unless otherwise specified, no part of this publication may be reproduced or utilized in any form or by any means, electronic or mechanical, including photocopying and microfilm, without permission in writing from either IEC or IEC's member National Committee in the country of the requester. If you have any questions about IEC copyright or have an enquiry about obtaining additional rights to this publication, please contact the address below or your local IEC member National Committee for further information.

Droits de reproduction réservés. Sauf indication contraire, aucune partie de cette publication ne peut être reproduite ni utilisée sous quelque forme que ce soit et par aucun procédé, électronique ou mécanique, y compris la photocopie et les microfilms, sans l'accord écrit de l'IEC ou du Comité national de l'IEC du pays du demandeur. Si vous avez des questions sur le copyright de l'IEC ou si vous désirez obtenir des droits supplémentaires sur cette publication, utilisez les coordonnées ci-après ou contactez le Comité national de l'IEC de votre pays de résidence.

IEC Secretariat
3, rue de Varembé
CH-1211 Geneva 20
Switzerland

Tel.: +41 22 919 02 11
info@iec.ch
www.iec.ch

About the IEC
The International Electrotechnical Commission (IEC) is the leading global organization that prepares and publishes International Standards for all electrical, electronic and related technologies.

About IEC publications
The technical content of IEC publications is kept under constant review by the IEC. Please make sure that you have the latest edition, a corrigendum or an amendment might have been published.

IEC publications search - webstore.iec.ch/advsearchform
The advanced search enables to find IEC publications by a variety of criteria (reference number, text, technical committee, …). It also gives information on projects, replaced and withdrawn publications.

IEC Just Published - webstore.iec.ch/justpublished
Stay up to date on all new IEC publications. Just Published details all new publications released. Available online and once a month by email.

IEC Customer Service Centre - webstore.iec.ch/csc
If you wish to give us your feedback on this publication or need further assistance, please contact the Customer Service Centre: sales@iec.ch.

IEC Products & Services Portal - products.iec.ch
Discover our powerful search engine and read freely all the publications previews, graphical symbols and the glossary. With a subscription you will always have access to up to date content tailored to your needs.

Electropedia - www.electropedia.org
The world's leading online dictionary on electrotechnology, containing more than 22 500 terminological entries in English and French, with equivalent terms in 25 additional languages. Also known as the International Electrotechnical Vocabulary (IEV) online.

A propos de l'IEC
La Commission Electrotechnique Internationale (IEC) est la première organisation mondiale qui élabore et publie des Normes internationales pour tout ce qui a trait à l'électricité, à l'électronique et aux technologies apparentées.

A propos des publications IEC
Le contenu technique des publications IEC est constamment revu. Veuillez vous assurer que vous possédez l'édition la plus récente, un corrigendum ou amendement peut avoir été publié.

Recherche de publications IEC - webstore.iec.ch/advsearchform
La recherche avancée permet de trouver des publications IEC en utilisant différents critères (numéro de référence, texte, comité d'études, …). Elle donne aussi des informations sur les projets et les publications remplacées ou retirées.

IEC Just Published - webstore.iec.ch/justpublished
Restez informé sur les nouvelles publications IEC. Just Published détaille les nouvelles publications parues. Disponible en ligne et une fois par mois par email.

Service Clients - webstore.iec.ch/csc
Si vous désirez nous donner des commentaires sur cette publication ou si vous avez des questions contactez-nous: sales@iec.ch.

IEC Products & Services Portal - products.iec.ch
Découvrez notre puissant moteur de recherche et consultez gratuitement tous les aperçus des publications, symboles graphiques et le glossaire. Avec un abonnement, vous aurez toujours accès à un contenu à jour adapté à vos besoins.

Electropedia - www.electropedia.org
Le premier dictionnaire d'électrotechnologie en ligne au monde, avec plus de 22 500 articles terminologiques en anglais et en français, ainsi que les termes équivalents dans 25 langues additionnelles. Egalement appelé Vocabulaire Electrotechnique International (IEV) en ligne.

Documents
Document Sharing Hub

Full document details: IEC 62024-2 2024

IEC 62024-2

Edition 3.0 2024-12

INTERNATIONAL STANDARD

NORME INTERNATIONALE

High frequency inductive components – Electrical characteristics and measuring methods –
Part 2: Rated current of inductors for DC-to-DC converters

Composants inductifs à haute fréquence – Caractéristiques électriques et méthodes de mesure –
Part 2: Courant assigné des bobines d'inductance pour les convertisseurs continu-continu

INTERNATIONAL
ELECTROTECHNICAL
COMMISSION

COMMISSION
ELECTROTECHNIQUE
INTERNATIONALE

ICS 29.100.10

ISBN 978-2-8327-0075-4

Warning! Make sure that you obtained this publication from an authorized distributor.
Attention! Veuillez vous assurer que vous avez obtenu cette publication via un distributeur agréé.

AVA Documents
Document Sharing Hub

® Registered trademark of the International Electrotechnical Commission
Marque déposée de la Commission Electrotechnique Internationale

Full document details: IEC 62024-2 2024

CONTENTS

FOREWORD 4
1 Scope 6
2 Normative references 6
3 Terms and definitions 6
4 Standard atmospheric conditions 7
4.1 Standard atmospheric conditions for testing 7
4.2 Reference conditions 7
5 Measuring method of direct saturation limited current (DC) 7
5.1 General 7
5.2 Test conditions 7
5.3 Measuring circuit and calculation 8
5.3.1 Measuring circuit 8
5.3.2 Calculation 9
5.4 Attachment jig of inductor 9
5.5 Measuring method 9
5.6 Quality conformance inspection 10
6 Measuring method of temperature rise limited current 10
6.1 General 10
6.2 Test conditions 10
6.3 Measuring jig 10
6.3.1 General 10
6.3.2 Printed-wiring board method 11
6.3.3 Lead wire method 18
6.4 Measuring method and calculation 18
6.4.1 General 18
6.4.2 Resistance substitution method 19
6.4.3 Thermocouple method 20
6.4.4 Thermal camera method 21
6.5 Quality conformance inspection 22
7 Determination of rated current 22
8 Information to be given in the detail specification 22
8.1 General 22
8.2 Measuring method of direct saturation limited current (DC) 22
8.3 Measuring method of temperature rise limited current 23
Annex A (informative) Example of recommended description on product specification sheets and catalogues 24
Bibliography 25

Figure 1 – Inductance measuring circuit under application of DC saturation condition 8
Figure 2 – Example of printed-wiring boards 18
Figure 3 – Temperature rise measuring circuit by resistance substitution method 19
Figure 4 – Temperature rise measuring circuit by thermocouple method 20
Figure 5 – Temperature rise measuring circuit by thermal camera method 21

Table 1 – Width of circuits 8

AVA Documents
Document Sharing Hub

Full document details: IEC 62024-2 2024

Table 2 – Wire size of circuits 18

Documents
Document Sharing Hub

Full document details: IEC 62024-2 2024

INTERNATIONAL ELECTROTECHNICAL COMMISSION

HIGH FREQUENCY INDUCTIVE COMPONENTS – ELECTRICAL CHARACTERISTICS AND MEASURING METHODS –

Part 2: Rated current of inductors for DC-to-DC converters

FOREWORD

1) The International Electrotechnical Commission (IEC) is a worldwide organization for standardization comprising all national electrotechnical committees (IEC National Committees). The object of IEC is to promote international co-operation on all questions concerning standardization in the electrical and electronic fields. To this end and in addition to other activities, IEC publishes International Standards, Technical Specifications, Technical Reports, Publicly Available Specifications (PAS) and Guides (hereafter referred to as "IEC Publication(s)"). Their preparation is entrusted to technical committees; any IEC National Committee interested in the subject dealt with may participate in this preparatory work. International, governmental and non-governmental organizations liaising with the IEC also participate in this preparation. IEC collaborates closely with the International Organization for Standardization (ISO) in accordance with conditions determined by agreement between the two organizations.
2) The formal decisions or agreements of IEC on technical matters express, as nearly as possible, an international consensus of opinion on the relevant subjects since each technical committee has representation from all interested IEC National Committees.
3) IEC Publications have the form of recommendations for international use and are accepted by IEC National Committees in that sense. While all reasonable efforts are made to ensure that the technical content of IEC Publications is accurate, IEC cannot be held responsible for the way in which they are used or for any misinterpretation by any end user.
4) In order to promote international uniformity, IEC National Committees undertake to apply IEC Publications transparently to the maximum extent possible in their national and regional publications. Any divergence between any IEC Publication and the corresponding national or regional publication shall be clearly indicated in the latter.
5) IEC itself does not provide any attestation of conformity. Independent certification bodies provide conformity assessment services and, in some areas, access to IEC marks of conformity. IEC is not responsible for any services carried out by independent certification bodies.
6) All users should ensure that they have the latest edition of this publication.
7) No liability shall attach to IEC or its directors, employees, servants or agents including individual experts and members of its technical committees and IEC National Committees for any personal injury, property damage or other damage of any nature whatsoever, whether direct or indirect, or for costs (including legal fees) and expenses arising out of the publication, use of, or reliance upon, this IEC Publication or any other IEC Publications.
8) Attention is drawn to the Normative references cited in this publication. Use of the referenced publications is indispensable for the correct application of this publication.
9) IEC draws attention to the possibility that the implementation of this document may involve the use of (a) patent(s). IEC takes no position concerning the evidence, validity or applicability of any claimed patent rights in respect thereof. As of the date of publication of this document, IEC had not received notice of (a) patent(s), which may be required to implement this document. However, implementers are cautioned that this may not represent the latest information, which may be obtained from the patent database available at https://patents.iec.ch [and/or] www.iso.org/patents. IEC shall not be held responsible for identifying any or all such patent rights.

IEC 62024-2 has been prepared by IEC technical committee 51: Magnetic components, ferrite and magnetic powder materials. It is an International Standard.

This third edition cancels and replaces the second edition published in 2020. This edition constitutes a technical revision.

This edition includes the following significant technical changes with respect to the previous edition:

a) extension of scope by increase of range of rated current from 22 A to 125 A;
b) extension of scope by increase of footprint limitation from 12 mm × 12 mm to 625 mm^2;
c) addition of upper current limitation for $I_{\text{class B}}$, $I_{\text{class C}}$ and $I_{\text{class D}}$ board to Table 1;
d) revised application examples for Table 1;

Documents
Document Sharing Hub
Full document details: IEC 62024-2 2024

e) addition of wire size references for current ranges between 22 A ≤ I ≤ 125 A to Table 2;

f) addition of crimp terminal references to Table 2;

g) addition of thermal camera method.

The text of this International Standard is based on the following documents:

Draft	Report on voting
51/1522/FDIS	51/1532/RVD

Full information on the voting for its approval can be found in the report on voting indicated in the above table.

The language used for the development of this International Standard is English.

This document was drafted in accordance with ISO/IEC Directives, Part 2, and developed in accordance with ISO/IEC Directives, Part 1 and ISO/IEC Directives, IEC Supplement, available at www.iec.ch/members_experts/refdocs. The main document types developed by IEC are described in greater detail at www.iec.ch/publications.

A list of all parts of IEC 62024 series, published under the general title *High frequency inductive components – Electrical characteristics and measuring methods* can be found on the IEC website.

The committee has decided that the contents of this document will remain unchanged until the stability date indicated on the IEC website under webstore.iec.ch in the data related to the specific document. At this date, the document will be

- reconfirmed,
- withdrawn, or
- revised.

Documents
Document Sharing Hub

Full document details: IEC 62024-2 2024

HIGH FREQUENCY INDUCTIVE COMPONENTS – ELECTRICAL CHARACTERISTICS AND MEASURING METHODS –

Part 2: Rated current of inductors for DC-to-DC converters

1 Scope

This part of IEC 62024 specifies the measuring methods of the rated DC limits for inductors as defined below.

Standardized measuring methods for the determination of ratings enable users to accurately compare the current ratings given in various manufacturers' data books.

This document is applicable to leaded and surface mount inductors with dimensions according to IEC 62025-1 and generally with rated current less than 125 A, although inductors with rated current greater than 125 A are available that fall within the dimension restrictions of this document (no larger than a 625 mm^2 footprint). These inductors are typically used in DC-to-DC converters built on printed circuit boards (PCBs), for electronic and telecommunication equipment, and small size switching power supply units.

The measuring methods are defined by the saturation and temperature rise limitations induced solely by direct current (DC).

2 Normative references

The following documents are referred to in the text in such a way that some or all of their content constitutes requirements of this document. For dated references, only the edition cited applies. For undated references, the latest edition of the referenced document (including any amendments) applies.

IEC 60068-1:2013, *Environmental testing – Part 1: General and guidance*

3 Terms and definitions

For the purposes of this document, the following terms and definitions apply.

ISO and IEC maintain terminology databases for use in standardization at the following addresses:

- IEC Electropedia: available at https://www.electropedia.org/
- ISO Online browsing platform: available at https://www.iso.org/obp

3.1
direct saturation limited current (DC)
allowable value of direct current (DC) for which the decrease of the inductance is within the specified value

3.2
temperature rise limited current
allowable value of direct current (DC) for which the self-generation heat of the inductor results in temperature rise within the specified value

Documents
Document Sharing Hub

Full document details: IEC 62024-2 2024

4 Standard atmospheric conditions

4.1 Standard atmospheric conditions for testing

Standard atmospheric conditions for testing shall be as follows (see IEC 60068-1:2013, 4.3):

- temperature: 15 °C to 35 °C;
- relative humidity: 25 % to 75 %;
- air pressure: 86 kPa to 106 kPa.

In the event of dispute or where required, the measurements shall be repeated using the referee temperatures and such other conditions as given in 4.2.

4.2 Reference conditions

For reference purposes, one of the standard atmospheric conditions for referee tests taken from IEC 60068-1:2013, 4.2, shall be selected and shall be as follows:

- temperature: 20 °C ± 2 °C;
- relative humidity: 60 % to 70 %;
- air pressure: 86 kPa to 106 kPa.

5 Measuring method of direct saturation limited current (DC)

5.1 General

When alternating current (AC) in which direct current (DC) is superimposed is supplied to an inductor, the inductance of the inductor decreases according to the DC value.

In a typical application, the saturation current results from the peak current of the superposition of alternating current (AC) on direct current (DC). In this document, the saturation current is measured as direct current (DC) offsetting a small signal alternating current (AC).

NOTE It is not practical to set a standard for alternating saturation limited current (AC), because there is an unlimited number of different ways to apply alternating current (AC) in an application. Therefore, manufacturers and users have generally defined direct saturation limited current (DC) as a common point of reference. This document does the same.

5.2 Test conditions

Unless otherwise specified in the detail specification, the test conditions shall be in accordance with Clause 4.

NOTE The variation of the value of direct saturation limited current (DC), as a function of temperature, is dependent on the magnetic material and the structure of the magnetic core of the inductor. However, measurement of direct saturating currents at elevated temperatures is generally not practical for inspection purposes. Therefore, the measurement at room temperature as provided by this document is generally applied for specification purposes. De-rating curves indicating variation of direct saturation limited current (DC) as a function of maximum operating temperature of the inductor can be generated. These curves can be used to correlate the direct saturation limited current (DC) at room temperature to the direct saturation limited current (DC) at typical operating temperatures. In some cases, the manufacturer and user will agree on an additional specification at a high temperature such as 85 °C, 105 °C or 125 °C.

Documents
Document Sharing Hub
Full document details: IEC 62024-2 2024

5.3 Measuring circuit and calculation

5.3.1 Measuring circuit

The measuring circuit is as shown in Figure 1.

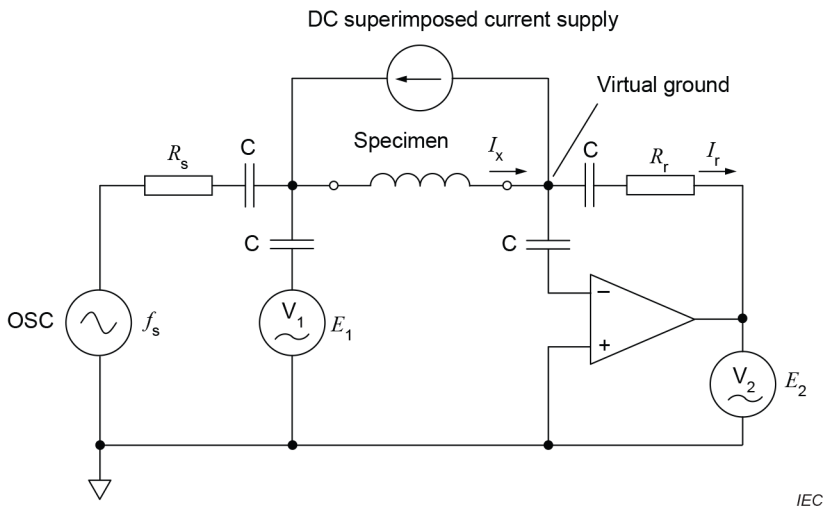

Key

Components

R_s source resistor $R = R_s$

R_r range select resistor $R = R_r$

V_1 voltmeter

V_2 voltmeter

E_1 RMS voltage value measured by voltmeter V_1

E_2 RMS voltage value measured by voltmeter V_2

E_s RMS voltage value of source

C DC current blocking capacitor

Supplies

f_s frequency of source

I_r supplied current to range select resistor

I_x supplied current to specimen

$I_x = I_r$

Figure 1 – Inductance measuring circuit under application of DC saturation condition

Documents
Document Sharing Hub
Full document details: IEC 62024-2 2024

5.3.2 Calculation

Voltages E_1 and E_2 shall be measured when frequency f_s and voltage E_s of the signal generator are supplied in accordance with the detail specification, and an initial value of the inductance shall be calculated by the following formulae:

$$Z_x = \frac{E_1}{I_r} = \frac{-E_1}{E_2} R_r$$

$$Z_x = |Z_x| \cos\theta + j|Z_x| \sin\theta$$

$$Z_x = R_x + jX_x$$

$$L_x = \frac{X_x}{\omega} = \frac{X_x}{2\pi f_s}$$

where

R_x is the resistance of the specimen;

X_x is the reactance of the specimen;

Z_x is the impedance of the specimen;

L_x is the equivalent series inductance of the specimen;

E_1 is the applied voltage to the specimen;

E_2 is the applied voltage to the range select resistor (= $I_r R_r$);

θ is the phase angle of the complex impedance.

5.4 Attachment jig of inductor

The attachment jig of the specimen shall be specified in a detail specification (see Clause 8).

5.5 Measuring method

a) A short compensation shall be done before measurement.

b) The specimen shall be connected to the circuit shown in Figure 1, by using the attachment jig specified in 5.4.

c) When the specimen is connected by soldering, it shall be left until it becomes cool enough.

d) Voltages E_1 and E_2 shall be measured when frequency f_s and voltage E_s of the signal generator are supplied in accordance with the detail specification, and an initial value of the inductance shall be calculated by the formulae of 5.3.2.

e) The value of the DC current that is superimposed on the specimen shall be modulated and the inductance value shall be measured.

f) The decrease from the initial value of the inductance shall be calculated. Direct saturation limited current (DC) shall be determined by measuring the direct current (DC) when the decrease in inductance matches the specified value in the detail specification.

g) The decrease in inductance that is specified in the detail specification should be 10 % or 30 %.

NOTE 10 % is one of the design points typical for sharp-saturating inductors, and 30 % is one of the design points typical for soft-saturating inductors. See Annex A.

Documents
Document Sharing Hub

Full document details: IEC 62024-2 2024

5.6 Quality conformance inspection

The direct current (DC) specified in the detail specification shall be supplied to a specimen in accordance with the methods specified in 5.3 to 5.5, and then inductance shall be measured. The decrease in inductance shall be within the specified value.

6 Measuring method of temperature rise limited current

6.1 General

When direct current (DC) is supplied to an inductor, the inductor generates heat by itself according to the supplied DC value because of its DC resistance.

NOTE 1 Temperature rise results from self-heating of the inductor. The sources of heating are DC copper losses, AC copper losses and AC core losses. This document defines the temperature rise induced only by direct currents (DC). In actual operating conditions, AC copper losses and AC core losses for the temperature rise will be considered. AC losses are highly affected by waveform, amplitude and frequency.

NOTE 2 It is not practical to set a standard for alternating temperature rise limited current (AC), because there is an unlimited number of different ways to apply alternating current (AC) in an application. Therefore, manufacturers and users have generally defined direct temperature rise limited current as a common point of reference. This document does the same.

6.2 Test conditions

Unless otherwise specified in the detail specification, for example an elevated ambient temperature, the test conditions shall be in accordance with Clause 4.

Since the value of DC resistance increases as a function of temperature, some applications require a high ambient temperature such as 85 °C, 105 °C or 125 °C for the temperature rise test.

NOTE 1 Power losses are factors that affect the efficiency of the DC-to-DC converter and the temperature rise of the inductor during actual operation, regardless of the operating temperature. In this document, temperature rise currents are defined in terms of direct currents (DC), so including alternating currents (AC) would be confusing and will be removed from the test conditions. The power ferrite core losses decrease with increasing temperature up to a temperature typically referred to as the core loss minima temperature, above which point this loss begins to increase. The minima temperature and magnitude of loss are dependent on the material type and grade. Some ferrite materials components exhibit sharp minima temperature. The temperature variation of the loss of the metal powder core, depending on the type of material, is considerably smaller than that of the ferrite core and does not tend to vary with temperature as the ferrite core exhibits.

NOTE 2 Regarding direct temperature rise limited currents (DC) at high temperatures, the variation in direct temperature rise limited current (DC) with ambient temperature variation can be modelled. Measurement at room temperature is commonly applied for detail specifications. In any event, the ambient temperature for the test is specified in the detail specification.

6.3 Measuring jig

6.3.1 General

The measuring jig shall be either the printed-wiring board method given in 6.3.2 or lead wire method given in 6.3.3, and shall be specified in the detail specification.

Documents
Document Sharing Hub
Full document details: IEC 62024-2 2024

6.3.2 Printed-wiring board method

The printed-wiring board shall be made of epoxide woven glass (FR4). Unless otherwise specified in the detail specification, the dimensions shall be as shown in Table 1, Table 2 and Figure 2.

Table 1 – Width of circuits

Rated current class	Rated current of inductor I A	Pattern width W mm	Pattern thickness t µm	Test board	Thermal Environment	Example application
$I_{class\ A}$	$I \leq 1$	1,0 ± 0,2	35 ± 10	Figure 2a) Figure 2g)	Low heat dissipation environments	Consumer
	$1 < I \leq 2$	2,0 ± 0,2				
	$2 < I \leq 3$	3,0 ± 0,3				
	$3 < I \leq 5$	5,0 ± 0,3				
	$5 < I \leq 7$	7,0 ± 0,5				
	$7 < I \leq 11$	11,0 ± 0,5				
	$11 < I \leq 16$	16,0 ± 0,5				
	$16 < I \leq 22$	22,0 ± 0,5				
$I_{class\ B}$	$I \leq 22$	40,0 ± 1.0		Figure 2b) Figure 2c) Figure 2d) Figure 2h)	Standard heat dissipation environments	Consumer/Automotive
$I_{class\ C}$	$I \leq 46$		105 ± 10		High heat dissipation environments	Consumer/Automotive
$I_{class\ D}$	$I \leq 125$		1 000 ± 50	Figure 2b) Figure 2e) Figure 2f) Figure 2i) Figure 2j)	Very high heat dissipation environments	Automotive/Large current power line (data centers, network infrastructure, etc.)
NOTE Winding cable to board: See Table 2.						

Documents
Document Sharing Hub
Full document details: IEC 62024-2 2024

Dimensions in millimetres

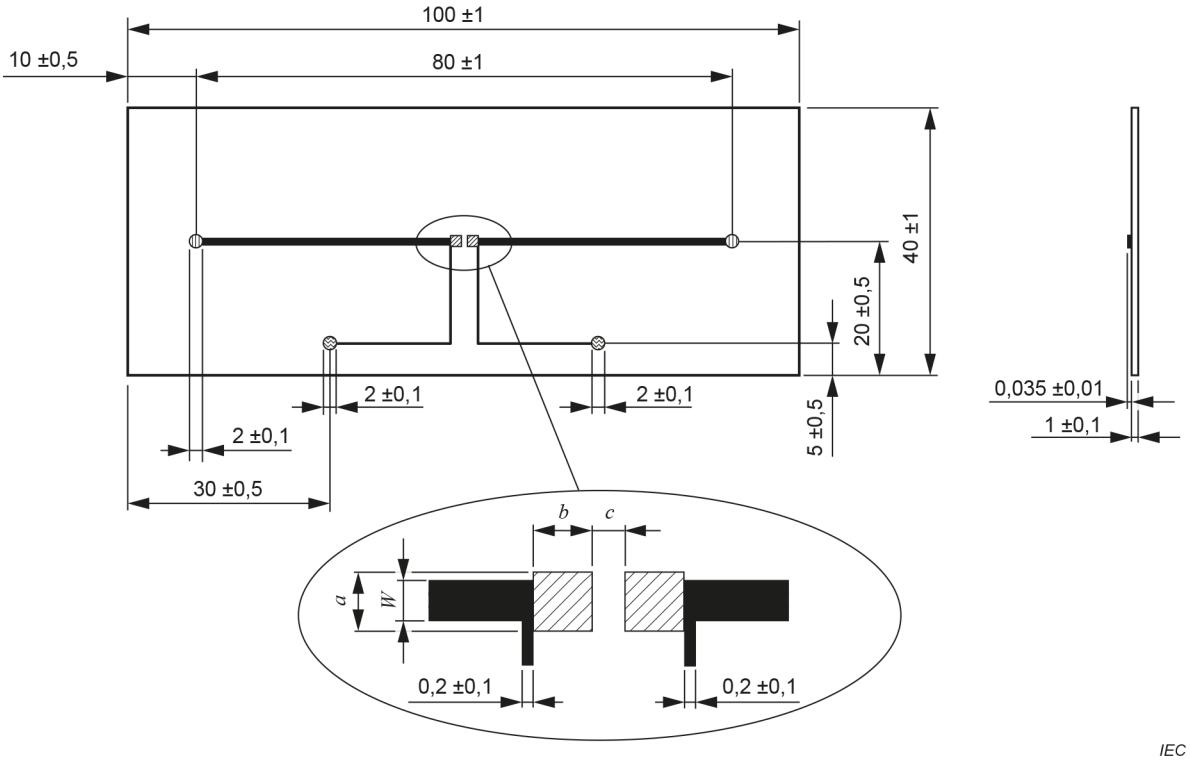

a) Example of printed-wiring board for SMD type ($I_{\text{class A}}$)

Dimension in millimetres

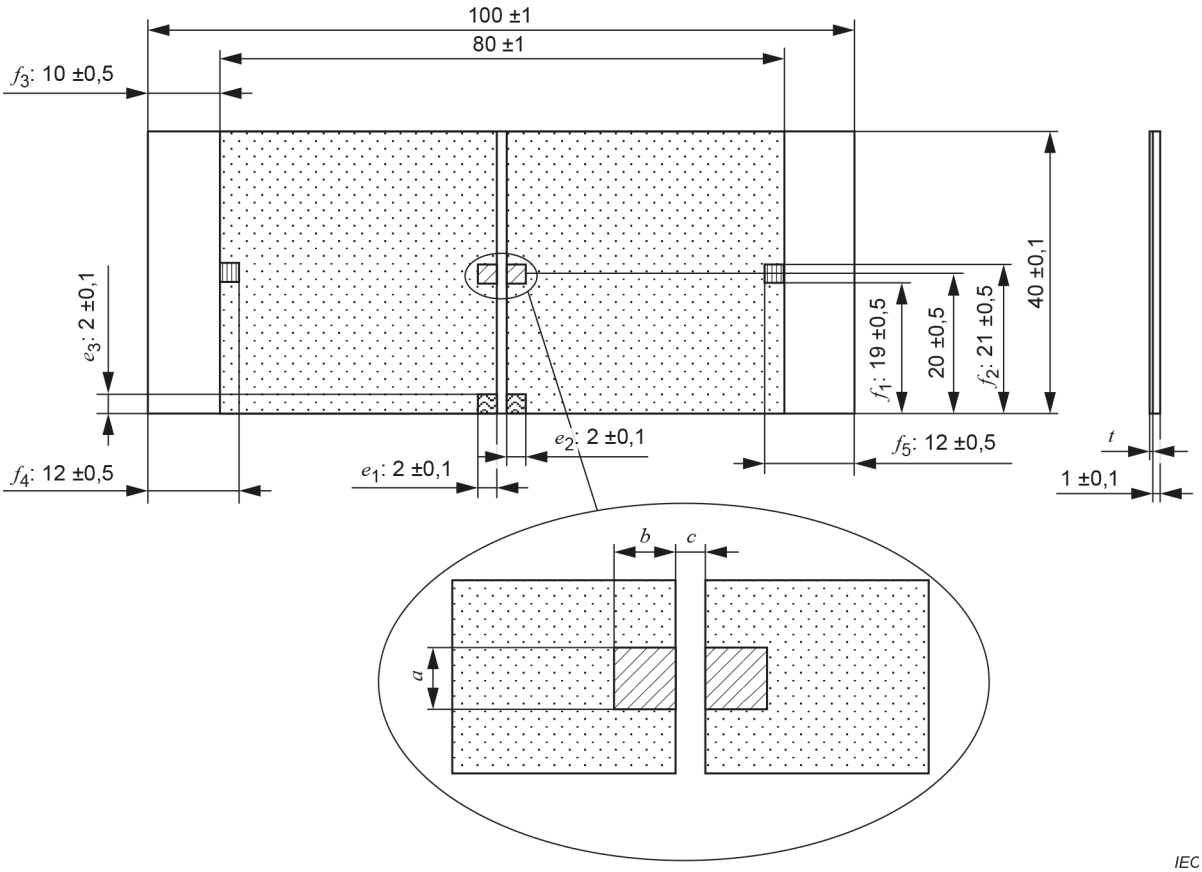

b) Example of printed-wiring board for SMD type ($I_{\text{class B}}$, $I_{\text{class C}}$, $I_{\text{class D}}$)

Documents
Document Sharing Hub
Full document details: IEC 62024-2 2024

Dimension in millimetres

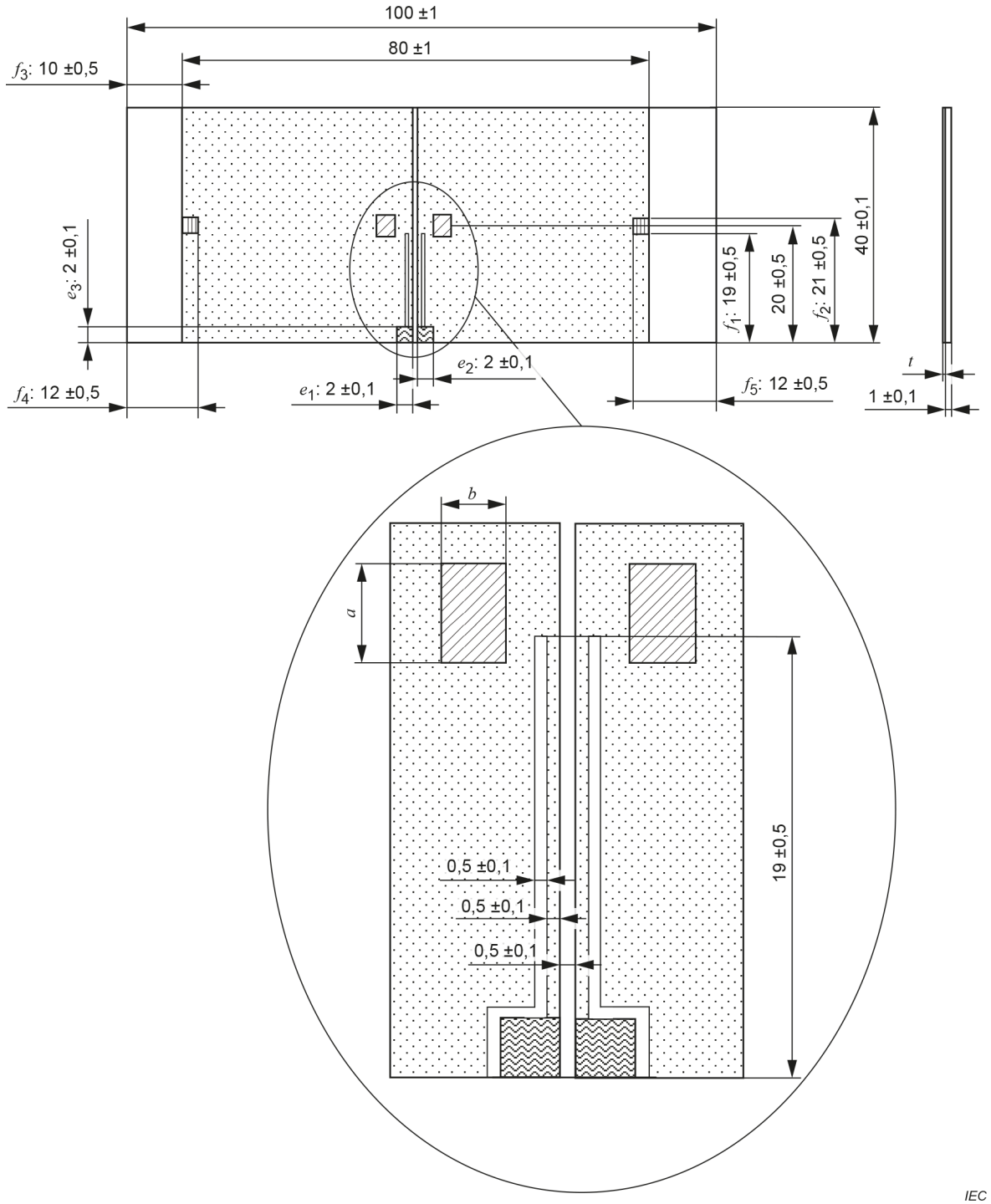

c) Example of printed-wiring board for SMD type ($I_{\text{class B}}$, $I_{\text{class C}}$)

Documents
Document Sharing Hub
Full document details: IEC 62024-2 2024

Dimensions in millimetres

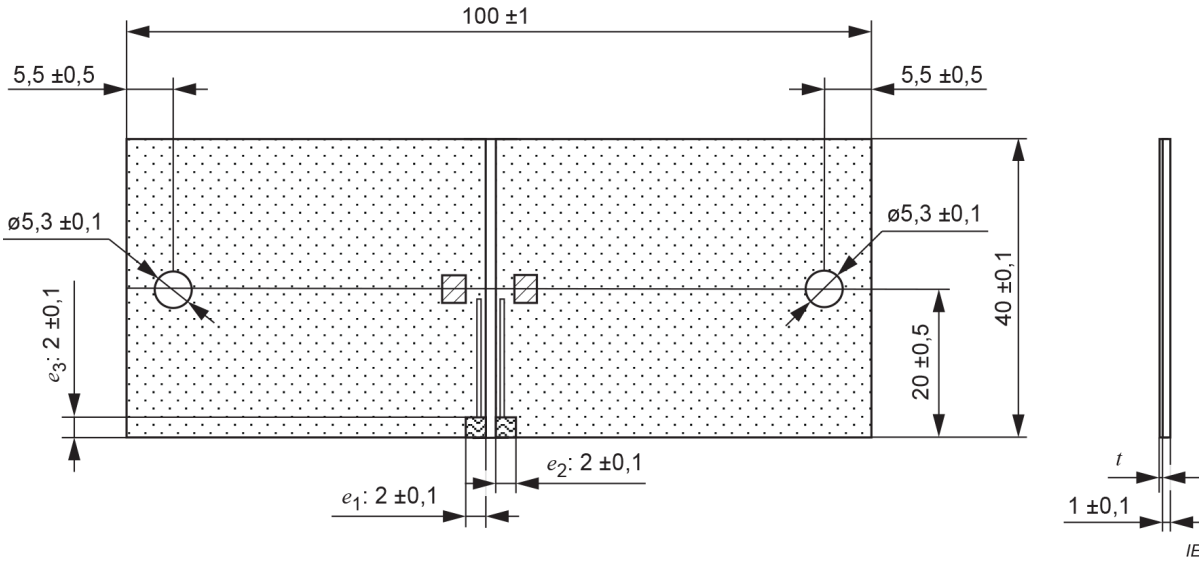

NOTE Install crimp terminals suitable for the wire size. (See Table 2.)

d) Example of printed-wiring board for SMD type ($I_{\text{class B}}$, $I_{\text{class C}}$)

Dimensions in millimetres

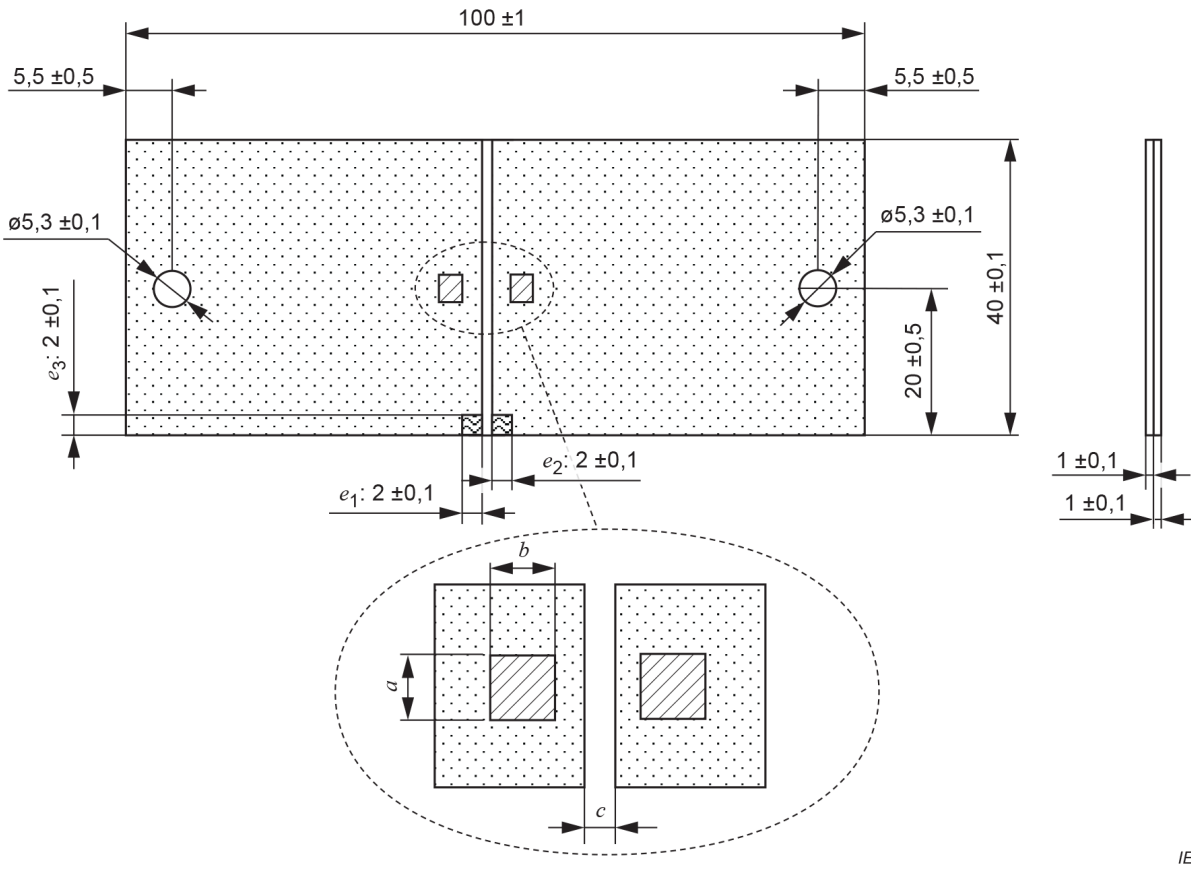

NOTE 1 Install crimp terminals suitable for the wire size. (See Table 2.)

NOTE 2 Lead wires can also be fitted near the inductor terminals as a sense trace on a class D board.

e) Example of printed-wiring board for SMD type ($I_{\text{class D}}$)

Documents
Document Sharing Hub
Full document details: IEC 62024-2 2024

Dimensions in millimetres

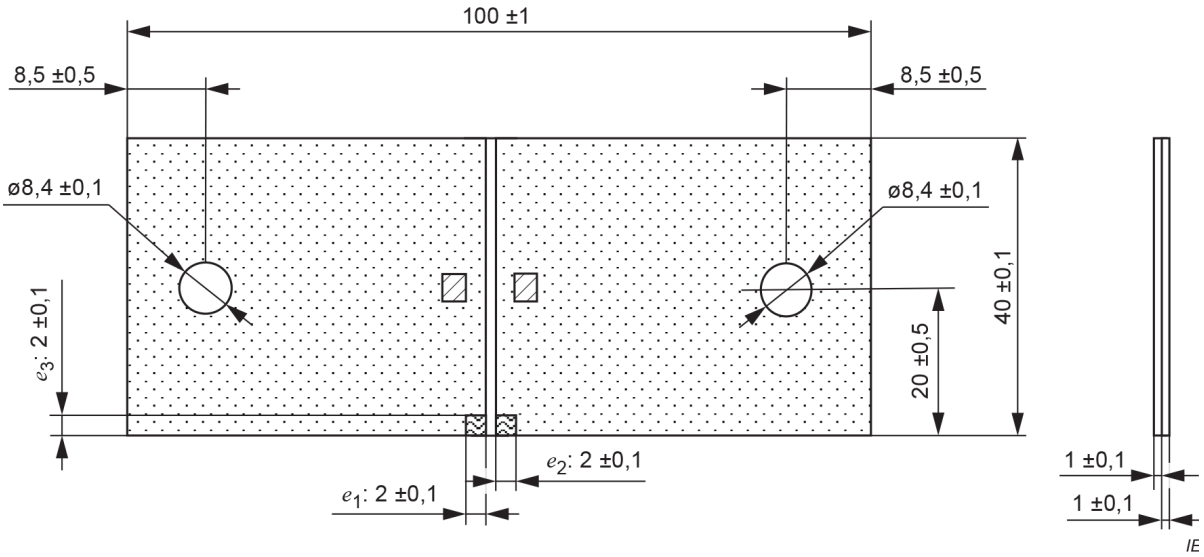

NOTE 1 Install crimp terminals suitable for the wire size. (See Table 2.)

NOTE 2 Lead wires can also be fitted near the inductor terminals as a sense trace on a class D board.

f) Example of printed-wiring board for SMD type ($I_{\text{class D}}$)

Dimensions in millimetres

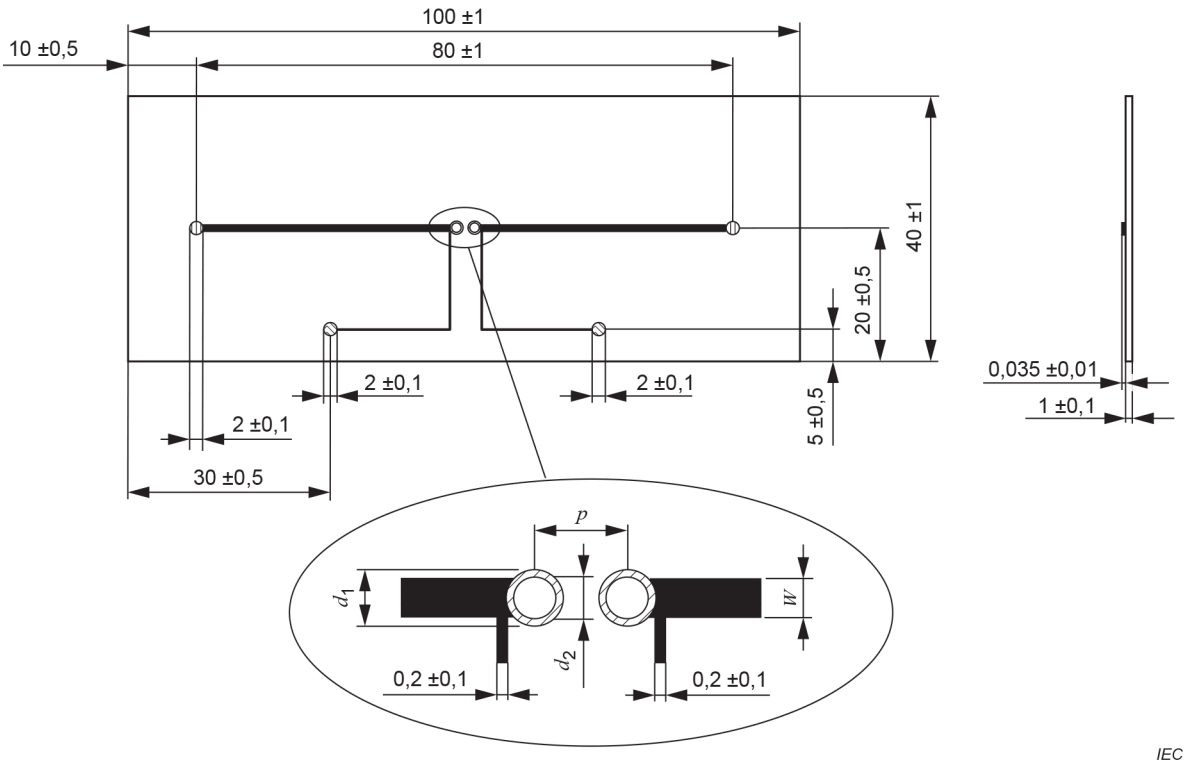

g) Example of printed-wiring board for lead type ($I_{\text{class A}}$)

Documents
Document Sharing Hub
Full document details: IEC 62024-2 2024