IEC 62037-1

Edition 3.0 2025-02
REDLINE VERSION

INTERNATIONAL STANDARD

Passive RF and microwave devices, intermodulation level measurement – Part 1: General requirements and measuring methods

IEC 62037-1:2025-02 RLV(en)

Documents
Document Sharing Hub

Full document details: IEC 62037-1 2025 RLV

THIS PUBLICATION IS COPYRIGHT PROTECTED
Copyright © 2025 IEC, Geneva, Switzerland

All rights reserved. Unless otherwise specified, no part of this publication may be reproduced or utilized in any form or by any means, electronic or mechanical, including photocopying and microfilm, without permission in writing from either IEC or IEC's member National Committee in the country of the requester. If you have any questions about IEC copyright or have an enquiry about obtaining additional rights to this publication, please contact the address below or your local IEC member National Committee for further information.

IEC Secretariat
3, rue de Varembé
CH-1211 Geneva 20
Switzerland

Tel.: +41 22 919 02 11
info@iec.ch
www.iec.ch

About the IEC
The International Electrotechnical Commission (IEC) is the leading global organization that prepares and publishes International Standards for all electrical, electronic and related technologies.

About IEC publications
The technical content of IEC publications is kept under constant review by the IEC. Please make sure that you have the latest edition, a corrigendum or an amendment might have been published.

IEC publications search - webstore.iec.ch/advsearchform
The advanced search enables to find IEC publications by a variety of criteria (reference number, text, technical committee, …). It also gives information on projects, replaced and withdrawn publications.

IEC Just Published - webstore.iec.ch/justpublished
Stay up to date on all new IEC publications. Just Published details all new publications released. Available online and once a month by email.

IEC Customer Service Centre - webstore.iec.ch/csc
If you wish to give us your feedback on this publication or need further assistance, please contact the Customer Service Centre: sales@iec.ch.

IEC Products & Services Portal - products.iec.ch
Discover our powerful search engine and read freely all the publications previews, graphical symbols and the glossary. With a subscription you will always have access to up to date content tailored to your needs.

Electropedia - www.electropedia.org
The world's leading online dictionary on electrotechnology, containing more than 22 500 terminological entries in English and French, with equivalent terms in 25 additional languages. Also known as the International Electrotechnical Vocabulary (IEV) online.

Documents
Document Sharing Hub

Full document details: IEC 62037-1 2025 RLV

IEC 62037-1

Edition 3.0 2025-02
REDLINE VERSION

INTERNATIONAL STANDARD

Passive RF and microwave devices, intermodulation level measurement – Part 1: General requirements and measuring methods

INTERNATIONAL
ELECTROTECHNICAL
COMMISSION

ICS 33.040.20

ISBN 978-2-8327-0285-7

Warning! Make sure that you obtained this publication from an authorized distributor.

® Registered trademark of the International Electrotechnical Commission

Documents
Document Sharing Hub

Full document details: IEC 62037-1 2025 RLV

CONTENTS

FOREWORD 4
1 Scope 6
2 Normative references 6
3 Terms, definitions and abbreviated terms 6
3.1 Terms and definitions 6
3.2 Abbreviated terms 6
4 Characteristics of intermodulation products 7
5 Principle of test procedure 7
6 Test set-up 7
6.1 General 7
6.2 Test equipment 8
6.2.1 General 8
6.2.2 Set-up 1 8
6.2.3 Set-up 2 10
7 Preparation of DUT and test equipment 10
7.1 General 10
7.2 Guidelines for minimizing generation of passive intermodulation 11
8 Test procedure 12
9 Test specification 12
10 Reporting 12
10.1 Results 12
10.2 Example of results 13
11 Measurement error 13
Annex A (informative) Configuration of low-PIM termination 15
A.1 General 15
A.2 Configuration of low-PIM terminations 15
A.2.1 Long cable termination 15
A.2.2 Lumped termination with a linear attenuator 15
Annex B (informative) Test procedure considerations 17
B.1 PIM variation versus frequency 17
B.2 Stepped frequency sweep method 17
B.3 Fixed frequency method 17
B.4 Dynamic PIM testing 17
B.5 Heating effects 17
Bibliography 18

Figure 1 – Set-up 1: reverse IM-test set-up 9
Figure 2 – Set-up 2: forward IM-test set-up 10
Figure 3 – Passive intermodulation (PIM) measurement error caused by residual system error 14
Figure A.1 – Long cable termination 15
Figure A.2 – Lumped termination with a linear attenuator 16

Table 1 – Guide for the design, selection of materials and handling of components that can cause PIM 11

AVA Documents
Document Sharing Hub

Full document details: IEC 62037-1 2025 RLV

Table 2 – Test set-up conditions 12

Documents
Document Sharing Hub

Full document details: IEC 62037-1 2025 RLV

INTERNATIONAL ELECTROTECHNICAL COMMISSION

PASSIVE RF AND MICROWAVE DEVICES, INTERMODULATION LEVEL MEASUREMENT –

Part 1: General requirements and measuring methods

FOREWORD

1) The International Electrotechnical Commission (IEC) is a worldwide organization for standardization comprising all national electrotechnical committees (IEC National Committees). The object of IEC is to promote international co-operation on all questions concerning standardization in the electrical and electronic fields. To this end and in addition to other activities, IEC publishes International Standards, Technical Specifications, Technical Reports, Publicly Available Specifications (PAS) and Guides (hereafter referred to as "IEC Publication(s)"). Their preparation is entrusted to technical committees; any IEC National Committee interested in the subject dealt with may participate in this preparatory work. International, governmental and non-governmental organizations liaising with the IEC also participate in this preparation. IEC collaborates closely with the International Organization for Standardization (ISO) in accordance with conditions determined by agreement between the two organizations.

2) The formal decisions or agreements of IEC on technical matters express, as nearly as possible, an international consensus of opinion on the relevant subjects since each technical committee has representation from all interested IEC National Committees.

3) IEC Publications have the form of recommendations for international use and are accepted by IEC National Committees in that sense. While all reasonable efforts are made to ensure that the technical content of IEC Publications is accurate, IEC cannot be held responsible for the way in which they are used or for any misinterpretation by any end user.

4) In order to promote international uniformity, IEC National Committees undertake to apply IEC Publications transparently to the maximum extent possible in their national and regional publications. Any divergence between any IEC Publication and the corresponding national or regional publication shall be clearly indicated in the latter.

5) IEC itself does not provide any attestation of conformity. Independent certification bodies provide conformity assessment services and, in some areas, access to IEC marks of conformity. IEC is not responsible for any services carried out by independent certification bodies.

6) All users should ensure that they have the latest edition of this publication.

7) No liability shall attach to IEC or its directors, employees, servants or agents including individual experts and members of its technical committees and IEC National Committees for any personal injury, property damage or other damage of any nature whatsoever, whether direct or indirect, or for costs (including legal fees) and expenses arising out of the publication, use of, or reliance upon, this IEC Publication or any other IEC Publications.

8) Attention is drawn to the Normative references cited in this publication. Use of the referenced publications is indispensable for the correct application of this publication.

9) IEC draws attention to the possibility that the implementation of this document may involve the use of (a) patent(s). IEC takes no position concerning the evidence, validity or applicability of any claimed patent rights in respect thereof. As of the date of publication of this document, IEC had not received notice of (a) patent(s), which may be required to implement this document. However, implementers are cautioned that this may not represent the latest information, which may be obtained from the patent database available at https://patents.iec.ch. IEC shall not be held responsible for identifying any or all such patent rights.

This redline version of the official IEC Standard allows the user to identify the changes made to the previous edition IEC 62037-1:2021. A vertical bar appears in the margin wherever a change has been made. Additions are in green text, deletions are in strikethrough red text.

Documents
Document Sharing Hub

Full document details: IEC 62037-1 2025 RLV

IEC 62037-1 has been prepared by IEC technical committee 46: Cables, wires, waveguides, RF connectors, RF and microwave passive components and accessories. It is an International Standard.

This third edition cancels and replaces the second edition published in 2021. This edition constitutes a technical revision.

This edition includes the following significant technical changes with respect to the previous edition:

a) added clarification that PIM generation is typically frequency dependent and noted that testing with swept or multiple fixed frequencies often provides more accurate results;
b) identified multi-port PIM analyzers as a possible test set-up topography;
c) added specification that test power level does not exceed the power handling capability of the DUT;
d) updated test specification to include missing parameters needed to properly define a PIM test;
e) added clarification that PIM test reports include the maximum PIM value measured over the test duration;
f) corrected error in Figure 3 that was erroneously changed in IEC 62037-1:2021.

The text of this International Standard is based on the following documents:

Draft	Report on voting
46/1035/FDIS	46/1043/RVD

Full information on the voting for its approval can be found in the report on voting indicated in the above table.

The language used for the development of this International Standard is English.

This document was drafted in accordance with ISO/IEC Directives, Part 2, and developed in accordance with ISO/IEC Directives, Part 1 and ISO/IEC Directives, IEC Supplement, available at www.iec.ch/members_experts/refdocs. The main document types developed by IEC are described in greater detail at www.iec.ch/publications.

A list of all the parts in the IEC 62037 series, published under the general title *Passive RF and microwave devices, intermodulation level measurement*, can be found on the IEC website.

The committee has decided that the contents of this document will remain unchanged until the stability date indicated on the IEC website under webstore.iec.ch in the data related to the specific document. At this date, the document will be

- reconfirmed,
- withdrawn, or
- revised.

Documents
Document Sharing Hub

Full document details: IEC 62037-1 2025 RLV

PASSIVE RF AND MICROWAVE DEVICES, INTERMODULATION LEVEL MEASUREMENT –

Part 1: General requirements and measuring methods

1 Scope

This part of IEC 62037 deals with the general requirements and measuring methods for intermodulation (IM) level measurement of passive RF and microwave components, which can be caused by the presence of two or more transmitting signals.

The test procedures given in this document give the general requirements and measurement methods required to characterize the level of unwanted IM signals using two transmitting signals.

The IEC 62037 series addresses the measurement of PIM but does not cover the long-term reliability of a product with reference to its performance.

2 Normative references

~~The following documents are referred to in the text in such a way that some or all of their content constitutes requirements of this document. For dated references, only the edition cited applies. For undated references, the latest edition of the referenced document (including any amendments) applies.~~

~~IEC 62037 (all parts), *Passive RF and microwave devices, intermodulation level measurement*~~

There are no normative references in this document.

3 Terms, definitions and abbreviated terms

3.1 Terms and definitions

No terms and definitions are listed in this document.

ISO and IEC maintain terminology databases for use in standardization at the following addresses:

- IEC Electropedia: available at https://www.electropedia.org/
- ISO Online browsing platform: available at https://www.iso.org/obp

3.2 Abbreviated terms

CATV community antenna television
CFEC carbon fibre epoxy composite
CW continuous wave
DUT device under test
IM intermodulation
PCB printed circuit board
PIM passive intermodulation
RBW resolution bandwidth

Documents
Document Sharing Hub
Full document details: IEC 62037-1 2025 RLV

VDA vacuum deposited aluminium

4 Characteristics of intermodulation products

PIM interference is caused by sources of non-linearity of mostly unknown nature, location and behaviour. A few examples are inter-metallic contacts, choice of materials, corrosion products, dirt, etc. Most of these effects are subject to changes over time due to mechanical stress, temperature changes, variations in material characteristics (cold flow, etc.) and climatic changes.

The generation of intermodulation products originates from point sources inside a DUT and propagates equally in all available directions.

The generation of passive intermodulation (PIM) products does not necessarily follow the law of the usual non-linear equation of quadratic form. Therefore, accurate calculation to other power levels causing the intermodulation is not possible and PIM comparisons should be made at the same power level.

~~Furthermore, PIM generation can be frequency dependent. When PIM generation is frequency dependent, the PIM performance shall be investigated over the specified frequency band.~~

Furthermore, PIM generation is typically frequency dependent and shall be investigated over the specified frequency band. Testing with swept or multiple fixed frequencies often provides more accurate results. See Annex B for additional information.

5 Principle of test procedure

Test signals of frequencies f_1 and f_2 with equal specified test port power levels are combined and fed to the DUT. The test signals should contain a harmonic or self-intermodulation signal level at least 10 dB lower than the expected level generated in the DUT.

The PIM is measured over the specified frequency range. The intermodulation products of order $(2f_1 \pm f_2)$, $(2f_2 \pm f_1)$, etc., are measured.

In most cases, the third order intermodulation signals represent the worst-case condition of unwanted signals generated; therefore, the measurement of these signals characterizes the DUT in a sufficient way. However, the test set-ups given in Clause 6 are suitable for measuring other intermodulation products.

In other systems (such as CATV), the third order intermodulation signals ~~may~~ might not be ~~as~~ applicable in characterizing the DUT.

Intermodulation can be measured in the reverse and forward direction. Reverse and forward refer to the direction of propagation of the most powerful carrier.

6 Test set-up

6.1 General

Experience shows that the generation of intermodulation products originates from point sources inside a device under test (DUT) and propagates equally in all available directions. Therefore, either the reverse (reflected) or the forward (transmitted) intermodulation signal can be measured.

Two different test set-ups are described in ~~Figure 1 and Figure 2~~ 6.2.2 and 6.2.3 and are for reference only. Other topologies are possible such as multi-port PIM analyzers.

AVA Documents
Document Sharing Hub

Set-up 1 is for measuring the reverse (reflected) intermodulation signal only, and set-up 2 is for measuring the forward (transmitted) intermodulation signal. The measurement method (reverse or forward) is dependent upon the DUT. The set-ups may be assembled from standard microwave or radio link hardware selected for this particular application. All components shall be checked for lowest self-intermodulation generation.

Experience shows that devices containing magnetic materials (circulators, isolators, etc.) can be prominent sources of intermodulation signal generation.

See Annex B for additional set-up considerations.

6.2 Test equipment

6.2.1 General

Two signal sources or signal generators with power amplifiers are required to reach the specified test port power. The combining and diplexing device can comprise a circulator, hybrid junction, coupler or filter network.

The test set-up self-intermodulation generated (including contribution of the load) should be at least 10 dB below the level to be measured on the DUT. The associated error ~~may~~ can be obtained from Figure 3.

The DUT shall be terminated by a load for the specified power if necessary. The receiving bandpass filter, tuned for the desired intermodulation signal, is followed by a low noise amplifier (if required) and a receiver.

See Annex B for additional set-up considerations.

6.2.2 Set-up 1

The set-up shown in Figure 1 is for measuring the reverse (reflected) IM-product and is therefore suitable for one-port and multi-port DUTs. On multi-port DUTs, the unused ports shall be connected to a linear termination. See Annex A for information on low PIM terminations.

a) Generators

The generators shall provide continuous wave (CW) signals of the specified test port power. They shall have sufficient frequency stability to ensure that the IM-product can be detected properly by the receiver. The generators may be pulsed on and off while testing to reduce power consumption.

Some limitations apply when using pulsed generators. See Annex B for test procedure considerations when using equipment with pulsed generators.

a) Transmit-filters

The filters are bandpass filters tuned to the particular frequencies. They isolate the generators from each other and filter out the harmonics of f_1 and f_2.

b) Combining and diplexing device

This device is used for combining the signals f_1 and f_2, delivering them to the test port and provides a port for the extraction of the reverse (reflected) signal f_{IM}.

c) Receive-filter

This filter is used for isolating the input of the receiver from the signals f_1 and f_2 to the extent that IM-products are not generated within the receiver.

d) Test port

The DUT is connected to P4. The specified input power shall be at the DUT, with any set-up loss between the receiver and the DUT compensated for.

Documents
Document Sharing Hub
Full document details: IEC 62037-1 2025 RLV

e) Termination

When a multi-port DUT is measured, the DUT shall be connected to a sufficiently linear termination (low intermodulation) of suitable power handling capability.

f) Receiver

The receiver shall be sensitive enough to detect a signal of the expected power level.

The receiver response time shall be sufficiently short to allow acquisition of rapid changes in amplitude. Sensitivity can be increased by a low noise preamplifier. Frequency stability shall be sufficient for the proper detection of the IM-signal.

When the PIM measurement result is close to the thermal noise floor of the receiver, the receiver sensitivity can be improved by reducing the resolution bandwidth (RBW). Furthermore, by using the averaging mode rather than the max-hold mode, a further improvement can be achieved, since the max-hold mode essentially measures the maximum thermal noise peak, while the averaging mode results in a measurement that is closer to the RMS value.

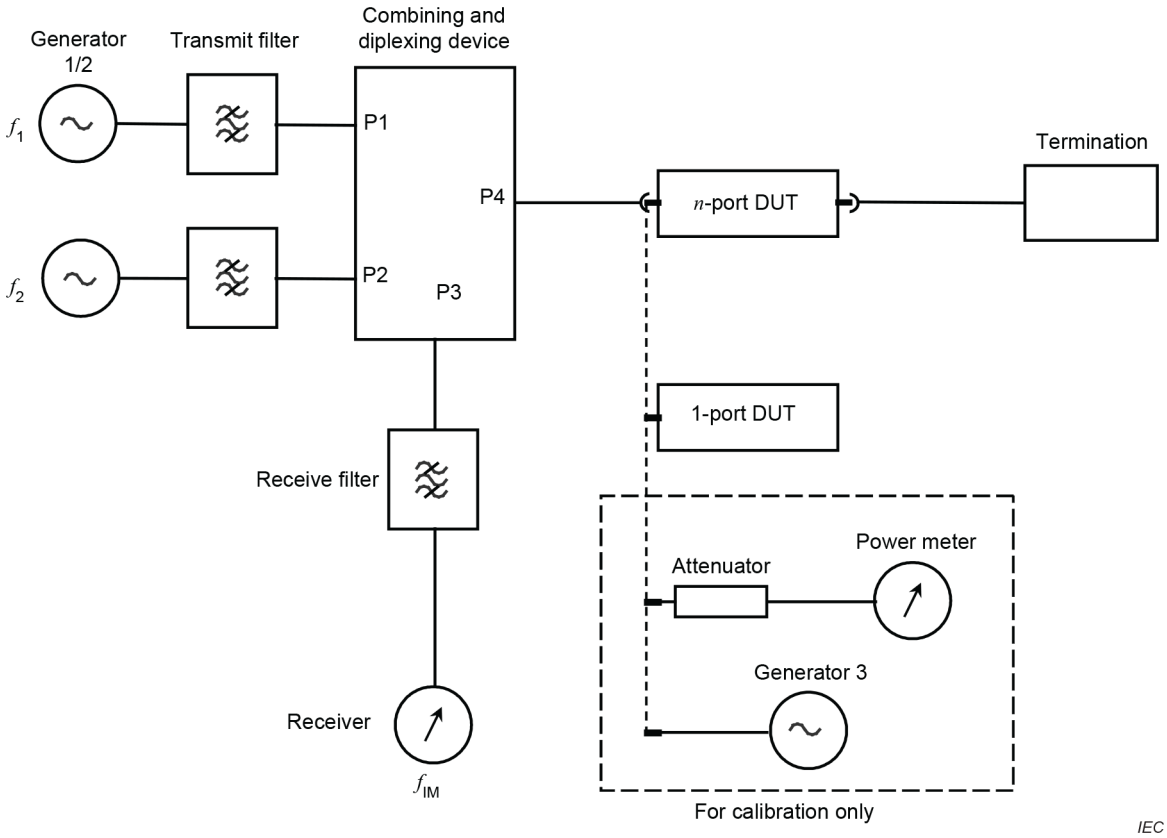

Figure 1 – Set-up 1: reverse IM-test set-up

Documents
Document Sharing Hub
Full document details: IEC 62037-1 2025 RLV

6.2.3 Set-up 2

The set-up shown in Figure 2 is for measuring the forward (transmitted) IM-product and is therefore suitable only for two- or multi-port DUTs.

All components are the same as those of set-up 1, except for those as noted below.

a) Combining and diplexing device

The extraction-port P3 on this device shall be terminated to prevent reflection of the IM-signals.

b) Diplexing device

The signals f_1, f_2 and f_{IM} are split to P6 and P7. This device, together with an additional receive-filter, is used for the extraction of the intermodulation signals.

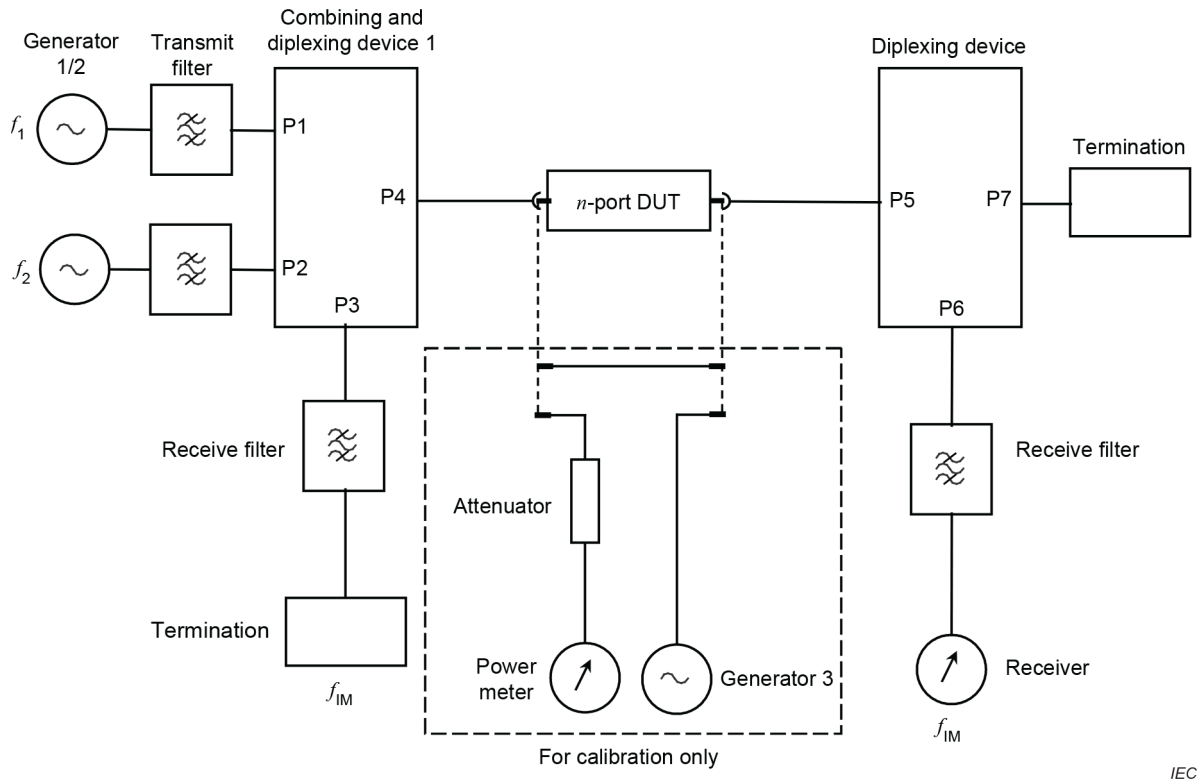

Figure 2 – Set-up 2: forward IM-test set-up

7 Preparation of DUT and test equipment

7.1 General

The DUT and test equipment shall be carefully checked for proper power handling range, frequency range, cleanliness and correct interconnection dimensions. All connector interfaces shall be tightened to the applicable IEC specification or, if none exists, to the manufacturer's recommended specification.

See Annex B for additional set-up considerations.

Documents
Document Sharing Hub
Full document details: IEC 62037-1 2025 RLV

7.2 Guidelines for minimizing generation of passive intermodulation

The following guidelines and Table 1 should be considered and adhered to wherever possible.

a) Non-linear materials should not be used in or near the current paths.

b) Current densities should be minimized in the conduction paths (e.g. Tx channel), by using larger conductors.

c) Minimize metallic junctions, avoid loose contacts and rotating joints.

d) Minimize the exposure of loose contacts, rough surfaces and sharp edges to RF power.

e) Keep thermal variations to a minimum, as the expansion and contraction of metals can create non-linear contacts.

f) Use brazed, soldered or welded joints if possible, but ensure these joints ~~are good and~~ have no non-linear materials, cracks, contamination or corrosion.

g) Avoid having tuning screws or moving parts in the high current paths; if necessary, ensure all joints are tight and clean, and preferably, free from vibration.

h) Cable lengths in general should be minimized and the use of high quality, low-IM cable is essential.

i) Minimize the use of non-linear components such as high-PIM loads, circulators, isolators and semiconductor devices.

j) Achieve ~~good~~ sufficient isolation between the high-power transmit signals and the low power receive signals by filtering and physical separation.

Table 1 – Guide for the design, selection of materials and handling of components that can ~~be susceptible to~~ cause PIM ~~generation~~

Part, material or procedure	Recommendations
Interfaces	Minimize the total number.
Connectors	Minimize the number of connectors used. Use high quality, low-PIM connectors mated with proper torque.
Inter-metallic connections	Each inter-metallic connection should be evaluated in terms of criticality for the total PIM level. Methods of controlling the performance are high contact pressure, insulation, soldering, brazing, etc.
Ferromagnetic materials	Not recommended (non-linear).
Non-magnetic stainless steel	Not recommended (contains iron).
Circulators, isolators and other ferrite devices	Not recommended.
Sharp edges	Avoid if it results in high current density.
Terminations or attenuators	Should be evaluated before use.
Hermetic seals/gaskets	Evaluate before use and avoid ferromagnetic materials.
Printed circuit boards (PCBs)	Materials, processes and design should all be considered and evaluated. Use low-PIM materials; be careful with material impurities, contamination and etching residuals. The copper trace should be finished to prevent corrosion.
Dissimilar metals	Not recommended (risk of galvanic corrosion).
Dielectric material	Use clean, high-quality material. Ensure it does not contain electrically conductive particles.
Machined dielectric materials	Use clean non-contaminated tools for machining.
Welded, soldered or brazed joints	Well executed and thoroughly cleaned, they provide satisfactory results. Shall be carefully inspected.
Carbon fibre epoxy composite (CFEC)	Generally acceptable for use in reflector and support structures, provided the fibres are not damaged. Should be evaluated if high flux density (e.g. > 10 mW /cm^2) is expected.

Documents
Document Sharing Hub
Full document details: IEC 62037-1 2025 RLV

Part, material or procedure	Recommendations
Standard multilayer thermal blankets made of vacuum deposited aluminium (VDA) on biaxially-oriented polyethylene terephthalate film or polyimide film	Special design required.
Cleanliness	Maintain clean and dry surfaces.
Plating	The thickness of the plating should be at least three times greater than the skin depth of the wave resulting from the skin effect at the lowest relevant frequency.

8 Test procedure

Table 2 gives certain conditions for test set-up 1 and test set-up 2.

Table 2 – Test set-up conditions

Test set-up 1	Test set-up 2
The set-up shall be verified for correct signal levels applied to the DUT. For mobile communication systems, it is generally recommended to use 2 × 20 W (43 dBm) at the test port of the DUT, unless otherwise specified. Other systems can require different power levels (higher or lower). The power level used shall not exceed the power handling capability of the DUT. See Annex B for heating effect considerations.	
The minimum number of test frequencies and~~/or~~ frequency spacing shall be specified.	
For lowest measurement uncertainty, the receiver shall be calibrated at the expected IM-level with a calibrated signal-source as indicated in Figure 1 and Figure 2.	
The termination shall be connected directly to the test port P4 and the self-intermodulation level of the set-up recorded.	P5 of the diplexing device shall be connected directly to P4 of the combining and summing device and the self-intermodulation level of the set-up recorded.
For low measurement uncertainties, the level of self-intermodulation should be at least 10 dB below the specified value for the DUT.	
Test the DUT as given in the specific set-up and procedure in the appropriate test set-up.	
An additional mechanical shock test may be carried out during the test sequence.	

9 Test specification

Test specifications shall specify the following:

a) test power level;

b) IM product order to be measured;

c) test type (forward or reverse IM);

d) frequency band(s) or specific frequencies within the band(s) to be measured;

e) dynamic stimulus requirements while testing;

f) maximum allowable PIM level.

10 Reporting

10.1 Results

~~The input power at individual frequencies should be specified. The values of f_1 and f_2 should be specified.~~

~~The PIM level and frequency should be specified.~~

Documents
Document Sharing Hub

Full document details: IEC 62037-1 2025 RLV

Reports shall include the maximum PIM value measured over the test duration. Depending on DUT type, there can be additional report requirements defined in the detail specification. See detail specifications for additional report requirements.

10.2 Example of results

The result is expressed as an absolute magnitude in dBm or relative magnitude in dBc, referenced to the power of a single carrier.

The relationship between a measured IM_3 value of –120 dBm can be converted to dBc.

EXAMPLE:

f_1 = 936 MHz, f_2 = 958 MHz, f_{IM_3} = 914 MHz

$P(f_1) = P(f_2)$ = 20 W (+43 dBm) IM_3 = –163 dBc (–120 dBm)

11 Measurement error

The total measurement uncertainty (δT) can be calculated by the following formula:

$$\cancel{RSS = \sqrt{\left[(\delta A)^2 + (\delta P_m)^2 + (\delta P_g)^2 + (\delta D)^2\right]}}$$

$$\delta T = \sqrt{\left[(\delta A)^2 + (\delta P_m)^2 + (\delta P_g)^2 + (\delta D)^2\right]}$$

where

δA is the uncertainty of the attenuator;

δP_m is the uncertainty of the power meter;

δP_g is the uncertainty of the generator 3;

δD is the uncertainty due to the difference between self-intermodulation of the test bench and intermodulation of the DUT (taken from Figure 3).

Mismatch errors are not included in the given formula.

Documents
Document Sharing Hub
Full document details: IEC 62037-1 2025 RLV

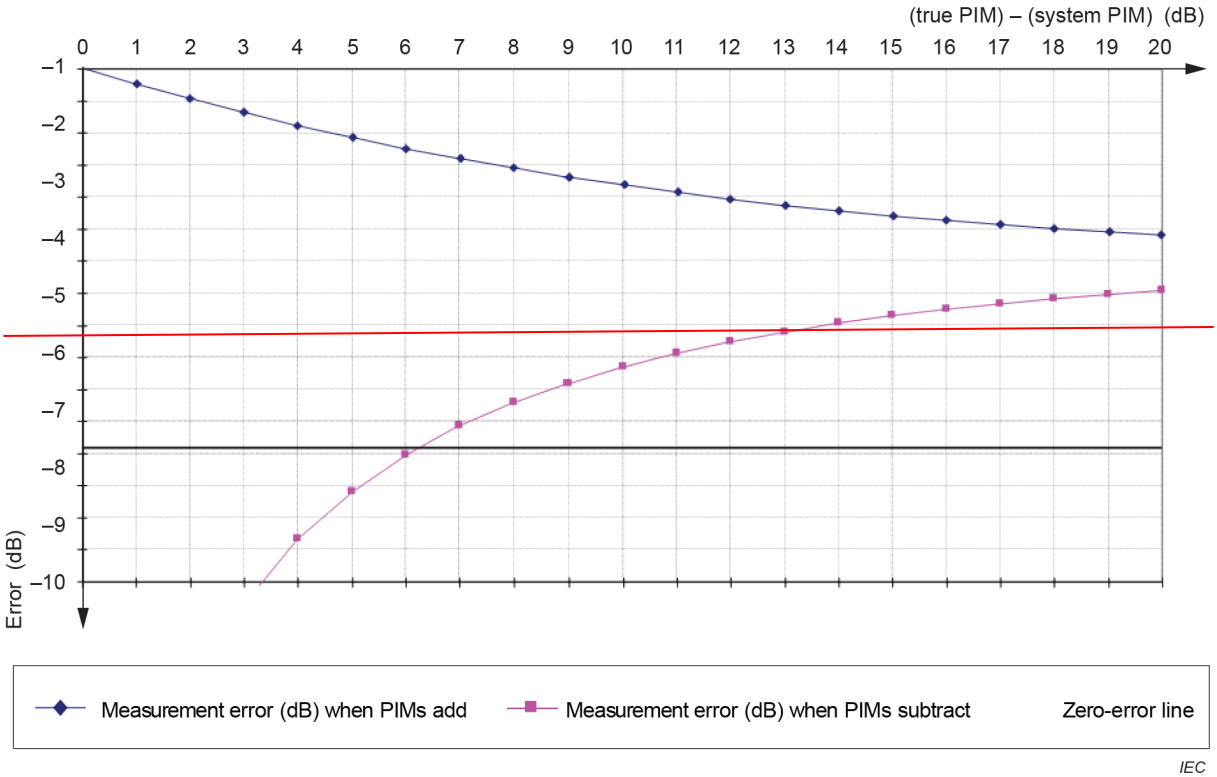

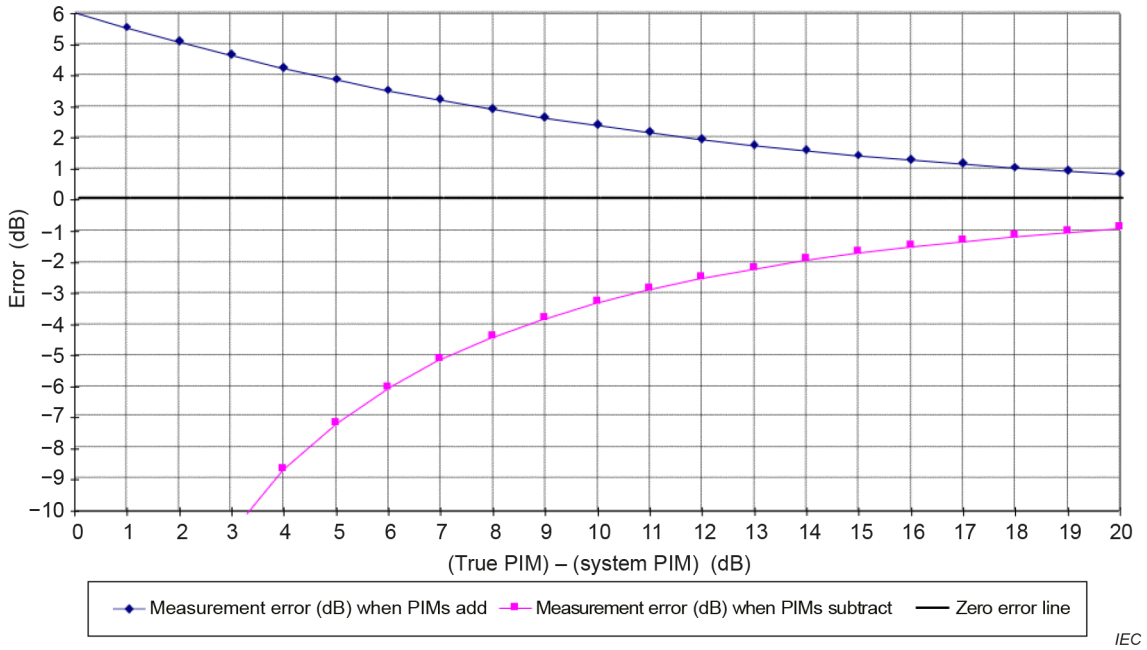

Figure 3 – Passive intermodulation (PIM) measurement error caused by residual system error

Documents
Document Sharing Hub
Full document details: IEC 62037-1 2025 RLV

Annex A
(informative)

Configuration of low-PIM termination

A.1 General

Annex A provides information on low-PIM terminations.

A.2 Configuration of low-PIM terminations

A.2.1 Long cable termination

High-PIM terminations can often consist of resistive materials. Therefore, long coaxial cables are used as a low-PIM termination (see Figure A.1). The following guidelines are in no particular order of significance but should be considered and adhered to wherever possible.

a) Avoid braided cables. Cables with a single centre conductor should be used. Semi-rigid cables would be a good choice from the practical viewpoint.

b) Avoid using cables with high-PIM materials and high-PIM plating. Plating with silver and tin would be a good choice. Plating should be sufficiently thicker than the skin depth at the lowest fundamental frequency.

c) A seamless cable configuration is the best for terminations because minimizing cable-connection is essential to achieve low-PIM. When the termination is composed of several short cables, the longest one should be used at the nearest side to the DUT.

d) Choose the cable with sufficient power-handling capability.

e) Choose the cable length sufficient for power absorption at the lowest fundamental frequency considering the isolation performance between the receive signals and transmit signals.

f) Use a connector with low-PIM characteristics.

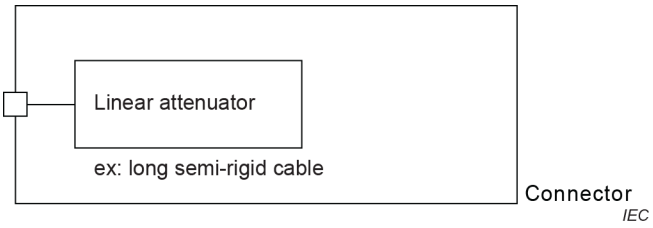

Figure A.1 – Long cable termination

A.2.2 Lumped termination with a linear attenuator

A low-PIM cable can be considered as a linear attenuator. The combination of the linear attenuator and a high-PIM lumped load as shown in Figure A.2 may be used as a low-PIM termination. The following procedure is presented for designing a low-PIM termination.

a) Measure the PIM characteristics of the lumped termination as a function of the fundamental power and determine the PIM-increase ratio X (dB).

b) Determine the required attenuation of the linear attenuator X_c (dB) using the following formula:

$$Y_{\text{term}} = Y_{\text{RDL}} - (X + 1) X_c$$

Documents
Document Sharing Hub
Full document details: IEC 62037-1 2025 RLV