IEC 62047-11

Edition 1.0 2013-07

INTERNATIONAL STANDARD

NORME INTERNATIONALE

colour inside

Semiconductor devices – Micro-electromechanical devices – Part 11: Test method for coefficients of linear thermal expansion of free-standing materials for micro-electromechanical systems

Dispositifs à semiconducteurs – Dispositifs microélectromécaniques – Partie 11: Méthode d'essai pour les coefficients de dilatation thermique linéaire des matériaux autonomes pour systèmes microélectromécaniques

IEC 62047-11:2013

AVA Documents
Document Sharing Hub

Full document details: IEC 62047-11 2013

THIS PUBLICATION IS COPYRIGHT PROTECTED

Copyright © 2013 IEC, Geneva, Switzerland

All rights reserved. Unless otherwise specified, no part of this publication may be reproduced or utilized in any form or by any means, electronic or mechanical, including photocopying and microfilm, without permission in writing from either IEC or IEC's member National Committee in the country of the requester.
If you have any questions about IEC copyright or have an enquiry about obtaining additional rights to this publication, please contact the address below or your local IEC member National Committee for further information.

Droits de reproduction réservés. Sauf indication contraire, aucune partie de cette publication ne peut être reproduite ni utilisée sous quelque forme que ce soit et par aucun procédé, électronique ou mécanique, y compris la photocopie et les microfilms, sans l'accord écrit de la CEI ou du Comité national de la CEI du pays du demandeur.
Si vous avez des questions sur le copyright de la CEI ou si vous désirez obtenir des droits supplémentaires sur cette publication, utilisez les coordonnées ci-après ou contactez le Comité national de la CEI de votre pays de résidence.

IEC Central Office
3, rue de Varembé
CH-1211 Geneva 20
Switzerland

Tel.: +41 22 919 02 11
Fax: +41 22 919 03 00
info@iec.ch
www.iec.ch

About the IEC

The International Electrotechnical Commission (IEC) is the leading global organization that prepares and publishes International Standards for all electrical, electronic and related technologies.

About IEC publications

The technical content of IEC publications is kept under constant review by the IEC. Please make sure that you have the latest edition, a corrigenda or an amendment might have been published.

Useful links:

IEC publications search - www.iec.ch/searchpub

The advanced search enables you to find IEC publications by a variety of criteria (reference number, text, technical committee,…).
It also gives information on projects, replaced and withdrawn publications.

IEC Just Published - webstore.iec.ch/justpublished

Stay up to date on all new IEC publications. Just Published details all new publications released. Available on-line and also once a month by email.

Electropedia - www.electropedia.org

The world's leading online dictionary of electronic and electrical terms containing more than 30 000 terms and definitions in English and French, with equivalent terms in additional languages. Also known as the International Electrotechnical Vocabulary (IEV) on-line.

Customer Service Centre - webstore.iec.ch/csc

If you wish to give us your feedback on this publication or need further assistance, please contact the Customer Service Centre: csc@iec.ch.

A propos de la CEI

La Commission Electrotechnique Internationale (CEI) est la première organisation mondiale qui élabore et publie des Normes internationales pour tout ce qui a trait à l'électricité, à l'électronique et aux technologies apparentées.

A propos des publications CEI

Le contenu technique des publications de la CEI est constamment revu. Veuillez vous assurer que vous possédez l'édition la plus récente, un corrigendum ou amendement peut avoir été publié.

Liens utiles:

Recherche de publications CEI - www.iec.ch/searchpub

La recherche avancée vous permet de trouver des publications CEI en utilisant différents critères (numéro de référence, texte, comité d'études,…).
Elle donne aussi des informations sur les projets et les publications remplacées ou retirées.

Just Published CEI - webstore.iec.ch/justpublished

Restez informé sur les nouvelles publications de la CEI. Just Published détaille les nouvelles publications parues. Disponible en ligne et aussi une fois par mois par email.

Electropedia - www.electropedia.org

Le premier dictionnaire en ligne au monde de termes électroniques et électriques. Il contient plus de 30 000 termes et définitions en anglais et en français, ainsi que les termes équivalents dans les langues additionnelles. Egalement appelé Vocabulaire Electrotechnique International (VEI) en ligne.

Service Clients - webstore.iec.ch/csc

Si vous désirez nous donner des commentaires sur cette publication ou si vous avez des questions contactez-nous: csc@iec.ch.

Documents
Document Sharing Hub

Full document details: IEC 62047-11 2013

IEC 62047-11

Edition 1.0 2013-07

INTERNATIONAL STANDARD

NORME INTERNATIONALE

colour inside

Semiconductor devices – Micro-electromechanical devices – Part 11: Test method for coefficients of linear thermal expansion of free-standing materials for micro-electromechanical systems

Dispositifs à semiconducteurs – Dispositifs microélectromécaniques – Partie 11: Méthode d'essai pour les coefficients de dilatation thermique linéaire des matériaux autonomes pour systèmes microélectromécaniques

INTERNATIONAL ELECTROTECHNICAL COMMISSION

COMMISSION ELECTROTECHNIQUE INTERNATIONALE

PRICE CODE
CODE PRIX R

ICS 31.080.99

ISBN 978-2-8322-0965-3

Warning! Make sure that you obtained this publication from an authorized distributor.
Attention! Veuillez vous assurer que vous avez obtenu cette publication via un distributeur agréé.

AVA Documents
Document Sharing Hub

® Registered trademark of the International Electrotechnical Commission
Marque déposée de la Commission Electrotechnique Internationale

Full document details: IEC 62047-11 2013

CONTENTS

FOREWORD ... 3
1 Scope ... 5
2 Normative References ... 5
3 Symbols and designations ... 5
4 Test piece ... 6
4.1 General ... 6
4.2 Shape of test piece ... 6
4.3 Test piece thickness ... 6
4.4 In-plane type test piece ... 7
4.5 Out-of-plane type test piece ... 7
5 Testing method and test apparatus ... 7
5.1 Measurement principle ... 7
5.1.1 General ... 7
5.1.2 In-plane method ... 8
5.1.3 Out-of-plane method ... 8
5.2 Test apparatus ... 9
5.2.1 General ... 9
5.2.2 In-plane method ... 9
5.2.3 Out-of-plane method ... 9
5.3 Temperature measurement ... 9
5.4 In-plane test piece handling ... 9
5.5 Thermal strain measurement ... 10
5.6 Heating speed ... 10
5.7 Data analysis ... 10
5.7.1 General ... 10
5.7.2 Terminal-based calculation ... 10
5.7.3 Slope calculation by linear least squares method ... 10
6 Test report ... 10
Annex A (informative) Test piece fabrication ... 12
Annex B (informative) Test piece handling example ... 13
Annex C (informative) Test piece releasing process ... 14
Annex D (informative) Out-of-plane test setup and test piece example ... 15
Annex E (informative) Data analysis example in in-plane test method ... 16
Annex F (informative) Data analysis example in out-of-plane test method ... 17
Bibliography ... 19

Figure 1 – Thin film test piece ... 6
Figure 2 – CLTE measurement principles ... 8
Figure A.1 – Schematic test piece fabrication process ... 12
Figure B.1 – Auxiliary jigs and a specimen example ... 13
Figure C.1 – Schematic illustration showing the test piece releasing process ... 14
Figure D.1 – Example of test setup and test piece ... 15
Figure E.1 – Example of CLTE measurement with an aluminium test piece ... 16
Figure F.1 – Example of CLTE measurement with a gold test piece ... 18

Table 1 – Symbols and designations ... 5

AVA Documents
Document Sharing Hub

Full document details: IEC 62047-11 2013

INTERNATIONAL ELECTROTECHNICAL COMMISSION

SEMICONDUCTOR DEVICES – MICRO-ELECTROMECHANICAL DEVICES –

Part 11: Test method for coefficients of linear thermal expansion of free-standing materials for micro-electromechanical systems

FOREWORD

1) The International Electrotechnical Commission (IEC) is a worldwide organization for standardization comprising all national electrotechnical committees (IEC National Committees). The object of IEC is to promote international co-operation on all questions concerning standardization in the electrical and electronic fields. To this end and in addition to other activities, IEC publishes International Standards, Technical Specifications, Technical Reports, Publicly Available Specifications (PAS) and Guides (hereafter referred to as "IEC Publication(s)"). Their preparation is entrusted to technical committees; any IEC National Committee interested in the subject dealt with may participate in this preparatory work. International, governmental and non-governmental organizations liaising with the IEC also participate in this preparation. IEC collaborates closely with the International Organization for Standardization (ISO) in accordance with conditions determined by agreement between the two organizations.
2) The formal decisions or agreements of IEC on technical matters express, as nearly as possible, an international consensus of opinion on the relevant subjects since each technical committee has representation from all interested IEC National Committees.
3) IEC Publications have the form of recommendations for international use and are accepted by IEC National Committees in that sense. While all reasonable efforts are made to ensure that the technical content of IEC Publications is accurate, IEC cannot be held responsible for the way in which they are used or for any misinterpretation by any end user.
4) In order to promote international uniformity, IEC National Committees undertake to apply IEC Publications transparently to the maximum extent possible in their national and regional publications. Any divergence between any IEC Publication and the corresponding national or regional publication shall be clearly indicated in the latter.
5) IEC itself does not provide any attestation of conformity. Independent certification bodies provide conformity assessment services and, in some areas, access to IEC marks of conformity. IEC is not responsible for any services carried out by independent certification bodies.
6) All users should ensure that they have the latest edition of this publication.
7) No liability shall attach to IEC or its directors, employees, servants or agents including individual experts and members of its technical committees and IEC National Committees for any personal injury, property damage or other damage of any nature whatsoever, whether direct or indirect, or for costs (including legal fees) and expenses arising out of the publication, use of, or reliance upon, this IEC Publication or any other IEC Publications.
8) Attention is drawn to the Normative references cited in this publication. Use of the referenced publications is indispensable for the correct application of this publication.
9) Attention is drawn to the possibility that some of the elements of this IEC Publication may be the subject of patent rights. IEC shall not be held responsible for identifying any or all such patent rights.

International Standard IEC 62047-11 has been prepared by subcommittee 47F: Micro-electromechanical systems, of IEC technical committee 47: Semiconductor devices.

The text of this standard is based on the following documents:

FDIS	Report on voting
47F/154/FDIS	47F/161/RVD

Full information on the voting for the approval of this standard can be found in the report on voting indicated in the above table.

This publication has been drafted in accordance with the ISO/IEC Directives, Part 2.

A list of all parts in the IEC 62047 series, published under the general title *Semiconductor devices – Micro-electromechanical devices*, can be found on the IEC website.

AVA Documents
Document Sharing Hub

Full document details: IEC 62047-11 2013

The committee has decided that the contents of this publication will remain unchanged until the stability date indicated on the IEC web site under "http://webstore.iec.ch" in the data related to the specific publication. At this date, the publication will be

- reconfirmed,
- withdrawn,
- replaced by a revised edition, or
- amended.

IMPORTANT – The 'colour inside' logo on the cover page of this publication indicates that it contains colours which are considered to be useful for the correct understanding of its contents. Users should therefore print this document using a colour printer.

Documents
Document Sharing Hub

Full document details: IEC 62047-11 2013

SEMICONDUCTOR DEVICES – MICRO-ELECTROMECHANICAL DEVICES –

Part 11: Test method for coefficients of linear thermal expansion of free-standing materials for micro-electromechanical systems

1 Scope

This part of IEC 62047 specifies the test method to measure the linear thermal expansion coefficients (CLTE) of thin free-standing solid (metallic, ceramic, polymeric etc.) micro-electro-mechanical system (MEMS) materials with length between 0,1 mm and 1 mm and width between 10 μm and 1 mm and thickness between 0,1 μm and 1 mm, which are main structural materials used for MEMS, micromachines and others. This test method is applicable for the CLTE measurement in the temperature range from room temperature to 30 % of a material's melting temperature.

2 Normative References

The following documents, in whole or in part, are normatively referenced in this document and are indispensable for its application. For dated references, only the edition cited applies. For undated references, the latest edition of the referenced document (including any amendments) applies.

IEC 62047-3, *Semiconductor devices – Micro-electromechanical devices – Part 3: Thin film standard test piece for tensile-testing*

3 Symbols and designations

Symbols and corresponding designations are given in Table 1.

Table 1 – Symbols and designations

Symbol	Unit	Designation
g	μm	Gauge length
L_0	μm	Initial length of a test piece
L_T	μm	Length of a test piece at temperature T
T	°C	Temperature
t	μm	Thickness of a test piece
w	μm	Width of a test piece
α_{av}	1/°C	Average coefficient of thermal expansion of a test piece
α_S	1/°C	Average coefficient of thermal expansion of a substrate
δ_T	μm	Thermal deformation
ε_T	1	Thermal strain

Documents
Document Sharing Hub
Full document details: IEC 62047-11 2013

4 Test piece

4.1 General

The test piece shall be prepared in accordance with the IEC 62047-3. It should be fabricated through the same processes used for the device where the thin film is applied. It should have dimensions in the same order of that of the objective device component in order to minimize the size effect. There are many fabrication methods depending on the applications. A typical test piece fabrication method based on MEMS processes is shown in Annex A.

4.2 Shape of test piece

The dimensions of a test piece, such as thickness (t), width (w), and initial length (L_0), in Figure 1 should be designed to be the same order of the device. The dimensions shall be specified within the accuracy range of ± 1 % of the corresponding length scale. The cross sections along the line *A-A′* are indicated as cross-hatching in Figure 1. The gauge length in Figure 1 shall be measured from centre to centre of the gauge marks.

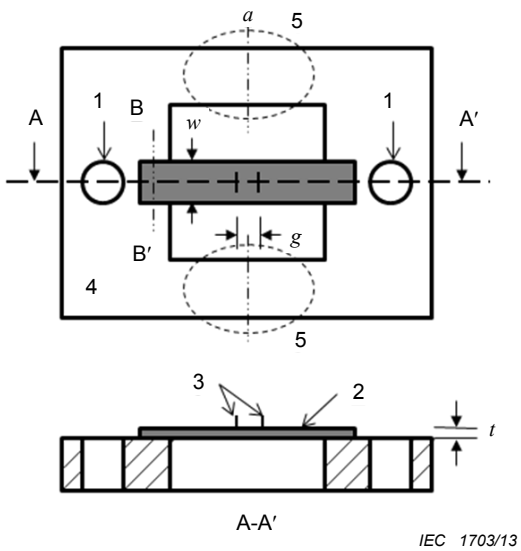

Key

1 holes for die fixing, tying a yarn or wire for the weight hanging

2 free-standing test piece

3 gauge marks to define a gauge length

4 substrate to accommodate a test piece

5 portions to be separated before testing to make a test piece free-standing

NOTE Imaginary line "*a*": The support straps "5" can be separated by cutting those along this line.

Figure 1 – Thin film test piece

4.3 Test piece thickness

Each test piece thickness shall be measured and the thickness should be recorded in the report. Each test piece thickness should be measured directly with calibrated equipment (for example scanning electron microscope, ellipsometer, etc.). However, the film thickness evaluated from step height (by scanning probe microscope, white light interferometric microscope, or surface profilometer, etc.) along the line *B-B′* in Figure 1 can be used as the thickness of a test piece.

Documents
Document Sharing Hub
Full document details: IEC 62047-11 2013

4.4 In-plane type test piece

The internal stress of the test piece should have proper values in order not to cause curling of the test piece. Gauge marks should be formed in the middle of a test piece. The gauge marks should not restrict the elongation of the test piece and should have small influence on test result. The stiffness of the gauge mark should be less than ± 1 % of that of the test piece. The symmetry in the thickness direction should be maintained in order to avoid the curling of the test piece. A dummy part shall be attached to a test piece as shown in Figure C.1.

4.5 Out-of-plane type test piece

An out-of-plane type test piece may be used if the free-standing test piece has thickness below 1 μm or has low strength to hang a weight. The holes and gauge marks in Figure 1 are not necessary in case of out-of-plane type test. The supporting straps don't need to be separated. The test piece should be buckled concavely or convexly before measurement.

5 Testing method and test apparatus

5.1 Measurement principle

5.1.1 General

The average CLTE value shall be obtained by linearly correlating the thermal strain change ($\Delta\varepsilon_{\mathrm{T}}$) by the corresponding temperature change (ΔT).

$$\alpha_{\mathrm{av}} = \frac{\Delta\varepsilon_{\mathrm{T}}}{\Delta T} \tag{1}$$

The thermal strains shall be obtained with two kinds of test methods as shown in Figure 2.

In-plane test method shall be preferred to out-of-plane method in the view points of accuracy and uncertainties. If there is no test setup as shown in Figure 2 a) and Figure C.1, out-of-plane method shall be used as an alternative because the out-of-plane method needs a furnace and measuring equipment.

Documents
Document Sharing Hub
Full document details: IEC 62047-11 2013

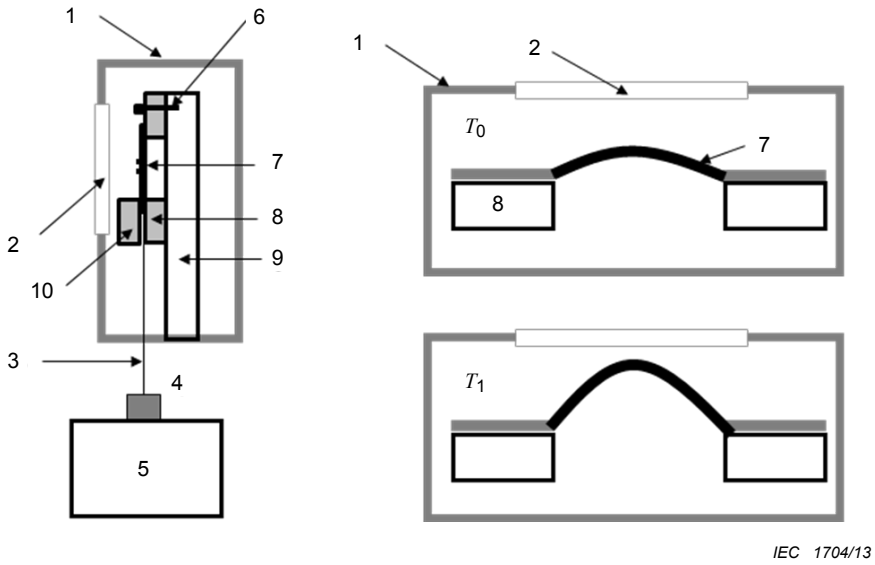

a) In-plane type b) Out-of-plane type

Key

1 heating furnace equipped with a hatch
2 viewport to observe and measure deformation of a test piece
3 metal wire or yarn to hang a weight
4 weight
5 translational stage to hold and release a weight
6 bolt to fix a die to the test die holder
7 free-standing test piece
8 test die
9 test die holder
10 dummy part for the symmetry of a test piece

Figure 2 – CLTE measurement principles

5.1.2 In-plane method

The thermal deformation (δ_T) shall be measured directly as a function of temperature by using a noncontact in-plane displacement measurement technique (laser interferometry, 2-D digital image correlation, etc.). The specimen should be in a furnace as shown in Figure 2a). The weight should be hung to a test piece in order to make it flattened. The elastic modulus should be independent of temperature in the range of measurement. The plastic deformation due to weight (yielding) or temperature (creep) should be avoided. The thermal strain shall be calculated by dividing the elongation by the gauge length.

$$\varepsilon_T = \frac{\delta_T}{g} \tag{2}$$

5.1.3 Out-of-plane method

The entire profile of a specimen along the length direction should be measured as a function of temperature by an accurate out-of-plane displacement measurement method (white light interferometric microscope, laser Doppler interferometer, 3-D digital image correlation, etc) as shown in Figure 2b). A test piece should be initially buckled. The initial length (L_0) at room temperature and successive lengths (L_T) at different temperatures of a specimen shall be calculated with the profiles measured. The thermal deformation (δ_T) shall be the difference

AVA Documents Document Sharing Hub

Full document details: IEC 62047-11 2013

between L_T and L_0. The thermal strain shall be calculated by dividing the deformation by the initial length.

$$\varepsilon_T = \frac{\delta_T}{L_0} = \frac{L_T - L_0}{L_0} \tag{3}$$

The CLTE of a substrate should be considered to calculate the accurate CLTE of the test piece because both experience the same amount of temperature change. The substrate effect shall be considered by adding the CLTE of the substrate to the average CLTE value from measurement. The CLTE of the substrate should be measured by using a test standard [1, 2, 3][1] if there is no certified CLTE value for the substrate.

$$\alpha_{av} = \frac{\Delta\varepsilon_T}{\Delta T} + \alpha_S \tag{4}$$

5.2 Test apparatus

5.2.1 General

The test piece should be seated in a furnace. The temperature of the furnace should be controlled within ± 1 °C by the feedback control.

5.2.2 In-plane method

A test apparatus shall be equipped with basic components shown in Figure 2a). A transparent window like a glass shall be used as a viewport. The hatch of a furnace should be closed and a predetermined weight should be hung to the yarn or metal wire to make a test piece flat enough but not to the point where it could yield. A test piece should be in a free-standing state before heating it up. See Annexes B and C.

5.2.3 Out-of-plane method

A furnace having a view port is only needed to heat up a test piece. A test piece should be in a free-standing state before heating it up. See Annex D.

5.3 Temperature measurement

The method of temperature measurement should be sufficiently sensitive and reliable. Temperature measurements should be made with a calibrated thermometer. Contact (thermocouple, etc.) or noncontact (infrared thermometers, optical pyrometers, etc.) thermometers shall be used. The temperature sensor that enables to measure ± 0,5 % of the maximum temperature accuracy shall be used and should be calibrated periodically. The temperature sensing points should be located very near to a test piece to measure the temperature accurately. The temperature distribution in the length direction should be doubly checked by a noncontact sensor like an IR thermometer.

5.4 In-plane test piece handling

A metal wire or yarn should be tied around a right hole in Figure 1 for the later weight hanging. The supporting portions in Figure 1 should be separated by cutting those before setting it up to the furnace. The test piece should be handled with special care after separating the supporting portions. This step can be skipped if a test piece is robust enough to handle easily. See Annex B.

---

[1] Figures in square brackets refer to the bibliography.

Documents
Document Sharing Hub

Full document details: IEC 62047-11 2013

5.5 Thermal strain measurement

A displacement measurement method that enables to measure 0,01 % strain value shall be used. Displacement should be measured at every 1 °C during a test to adequately define the temperature-strain curve.

5.6 Heating speed

The thermal strains should be recorded as a function of temperature while raising the temperature below the rate of 1 °C/min to avoid thermal inertia.

5.7 Data analysis

5.7.1 General

The average CLTE shall be calculated by using one of the following methods.

5.7.2 Terminal-based calculation

The average linear CLTE value shall be calculated by dividing the thermal strain difference ($\Delta\varepsilon_T$) by the corresponding temperature difference (ΔT). The temperature-strain curve should be linear in the range of interest.

5.7.3 Slope calculation by linear least squares method

The linear least squares method shall be used to fit the thermal strain (ε_T) versus temperature (T) data. The average CLTE (α_{av}) shall be the slope of the linearly fitted curve. The intercept on the thermal strain axis (ε_{T0}) does not affect the result at all. The coefficient of correlation shall be over 0,95 to ensure the linearity. See Annexes E and F.

$$\varepsilon_T = \alpha_{av} T + \varepsilon_0 \tag{5}$$

6 Test report

The test report shall contain at least the following information.

a) reference to this international standard;
b) identification number of the test piece;
c) displacement measuring equipment;
   – type;
   – sensitivity and accuracy;
d) test piece material;
   – in case of single crystal: crystallographic orientation;
   – in case of polycrystal: texture and grain size;
e) shape and dimension of test piece;
   – type (in-plane or out-of-plane)
   – picture;
   – gauge length (in-plane method only);
   – thickness;
   – width;
f) test piece fabrication method and its detail;
   – deposition method;

Documents
Document Sharing Hub
Full document details: IEC 62047-11 2013

- fabrication condition;

g) weights and stresses induced (in-plane method only);

h) temperature measurement method and its accuracy;

i) measured properties and results;
   - thermal strain curve;
   - average linear coefficient of thermal expansion;
   - calculation methods (terminal-based or least squares method);
   - temperature range.

Documents
Document Sharing Hub

Full document details: IEC 62047-11 2013