IEC 62129-3

Edition 1.0 2019-05

INTERNATIONAL STANDARD

NORME INTERNATIONALE

colour inside

Calibration of wavelength / optical frequency measurement instruments – Part 3: Optical frequency meters internally referenced to a frequency comb

Étalonnage des appareils de mesure de longueur d'onde / appareil de mesure de la fréquence optique – Partie 3: Fréquencemètres optiques faisant référence en interne à un peigne de fréquence

IEC 62129-3:2019-05(en-fr)

Documents
Document Sharing Hub

Full document details: IEC 62129-3-2019

THIS PUBLICATION IS COPYRIGHT PROTECTED
Copyright © 2019 IEC, Geneva, Switzerland

All rights reserved. Unless otherwise specified, no part of this publication may be reproduced or utilized in any form or by any means, electronic or mechanical, including photocopying and microfilm, without permission in writing from either IEC or IEC's member National Committee in the country of the requester. If you have any questions about IEC copyright or have an enquiry about obtaining additional rights to this publication, please contact the address below or your local IEC member National Committee for further information.

Droits de reproduction réservés. Sauf indication contraire, aucune partie de cette publication ne peut être reproduite ni utilisée sous quelque forme que ce soit et par aucun procédé, électronique ou mécanique, y compris la photocopie et les microfilms, sans l'accord écrit de l'IEC ou du Comité national de l'IEC du pays du demandeur. Si vous avez des questions sur le copyright de l'IEC ou si vous désirez obtenir des droits supplémentaires sur cette publication, utilisez les coordonnées ci-après ou contactez le Comité national de l'IEC de votre pays de résidence.

IEC Central Office
3, rue de Varembé
CH-1211 Geneva 20
Switzerland

Tel.: +41 22 919 02 11
info@iec.ch
www.iec.ch

About the IEC
The International Electrotechnical Commission (IEC) is the leading global organization that prepares and publishes International Standards for all electrical, electronic and related technologies.

About IEC publications
The technical content of IEC publications is kept under constant review by the IEC. Please make sure that you have the latest edition, a corrigendum or an amendment might have been published.

IEC publications search - webstore.iec.ch/advsearchform
The advanced search enables to find IEC publications by a variety of criteria (reference number, text, technical committee,…). It also gives information on projects, replaced and withdrawn publications.

IEC Just Published - webstore.iec.ch/justpublished
Stay up to date on all new IEC publications. Just Published details all new publications released. Available online and once a month by email.

IEC Customer Service Centre - webstore.iec.ch/csc
If you wish to give us your feedback on this publication or need further assistance, please contact the Customer Service Centre: sales@iec.ch.

Electropedia - www.electropedia.org
The world's leading online dictionary on electrotechnology, containing more than 22 000 terminological entries in English and French, with equivalent terms in 16 additional languages. Also known as the International Electrotechnical Vocabulary (IEV) online.

IEC Glossary - std.iec.ch/glossary
67 000 electrotechnical terminology entries in English and French extracted from the Terms and Definitions clause of IEC publications issued since 2002. Some entries have been collected from earlier publications of IEC TC 37, 77, 86 and CISPR.

A propos de l'IEC
La Commission Electrotechnique Internationale (IEC) est la première organisation mondiale qui élabore et publie des Normes internationales pour tout ce qui a trait à l'électricité, à l'électronique et aux technologies apparentées.

A propos des publications IEC
Le contenu technique des publications IEC est constamment revu. Veuillez vous assurer que vous possédez l'édition la plus récente, un corrigendum ou amendement peut avoir été publié.

Recherche de publications IEC - webstore.iec.ch/advsearchform
La recherche avancée permet de trouver des publications IEC en utilisant différents critères (numéro de référence, texte, comité d'études,…). Elle donne aussi des informations sur les projets et les publications remplacées ou retirées.

IEC Just Published - webstore.iec.ch/justpublished
Restez informé sur les nouvelles publications IEC. Just Published détaille les nouvelles publications parues. Disponible en ligne et une fois par mois par email.

Service Clients - webstore.iec.ch/csc
Si vous désirez nous donner des commentaires sur cette publication ou si vous avez des questions contactez-nous: sales@iec.ch.

Electropedia - www.electropedia.org
Le premier dictionnaire d'électrotechnologie en ligne au monde, avec plus de 22 000 articles terminologiques en anglais et en français, ainsi que les termes équivalents dans 16 langues additionnelles. Egalement appelé Vocabulaire Electrotechnique International (IEV) en ligne.

Glossaire IEC - std.iec.ch/glossary
67 000 entrées terminologiques électrotechniques, en anglais et en français, extraites des articles Termes et Définitions des publications IEC parues depuis 2002. Plus certaines entrées antérieures extraites des publications des CE 37, 77, 86 et CISPR de l'IEC.

Documents
Document Sharing Hub

Full document details: IEC 62129-3-2019

IEC 62129-3

Edition 1.0 2019-05

INTERNATIONAL STANDARD

NORME INTERNATIONALE

colour inside

Calibration of wavelength / optical frequency measurement instruments – Part 3: Optical frequency meters internally referenced to a frequency comb

Étalonnage des appareils de mesure de longueur d'onde / appareil de mesure de la fréquence optique – Partie 3: Fréquencemètres optiques faisant référence en interne à un peigne de fréquence

INTERNATIONAL ELECTROTECHNICAL COMMISSION

COMMISSION ELECTROTECHNIQUE INTERNATIONALE

ICS 33.180.01

ISBN 978-2-8322-6922-0

Warning! Make sure that you obtained this publication from an authorized distributor.
Attention! Veuillez vous assurer que vous avez obtenu cette publication via un distributeur agréé.

® Registered trademark of the International Electrotechnical Commission
Marque déposée de la Commission Electrotechnique Internationale

AVA Documents
Document Sharing Hub

Full document details: IEC 62129-3-2019

CONTENTS

FOREWORD 3
INTRODUCTION 5
1 Scope 6
2 Normative references 6
3 Terms and definitions 6
4 Calibration test requirements 8
4.1 Organization 8
4.2 Traceability 8
4.3 Preparation 8
4.4 Reference calibration conditions 8
5 Optical frequency calibration 8
5.1 Establishing the calibration conditions 8
5.2 Calibration procedure 9
5.2.1 General 9
5.2.2 Measurement configuration 9
5.2.3 Detailed procedure 10
5.3 Calibration uncertainty 10
5.4 Reporting the results 11
6 Absolute power calibration 11
Annex A (normative) Mathematical basis for measurement uncertainty calculations 12
A.1 General 12
A.2 Type A evaluation of uncertainty 12
A.3 Type B evaluation of uncertainty 12
A.4 Determining the combined standard uncertainty 13
A.5 Reporting 14
Annex B (informative) Measurement method for the frequency of a stabilized laser with an optical frequency comb 15
Annex C (informative) Examples of stabilized optical frequency comb source 17
C.1 Method A (pump pulse source and nonlinear optical effect) 17
C.2 Method B (stabilized laser and electro-optical modulator) 17
Annex D (normative) Frequency-dependence of uncertainty 19
Bibliography 20

Figure 1 – Optical frequency meter measurement using a reference source 9
Figure 2 – Optical frequency meter measurement using a reference optical frequency meter 10
Figure B.1 – Schematic configuration of optical frequency measurement technique using an optical comb 15
Figure B.2 – Optical spectra of lasers and optical frequency combs 16
Figure C.1 – Pump pulse source and nonlinear optical effect 17
Figure C.2 – Electro-optical modulator type comb source 18

Documents
Document Sharing Hub
Full document details: IEC 62129-3-2019

INTERNATIONAL ELECTROTECHNICAL COMMISSION

CALIBRATION OF WAVELENGTH / OPTICAL FREQUENCY MEASUREMENT INSTRUMENTS –

Part 3: Optical frequency meters internally referenced to a frequency comb

FOREWORD

1) The International Electrotechnical Commission (IEC) is a worldwide organization for standardization comprising all national electrotechnical committees (IEC National Committees). The object of IEC is to promote international co-operation on all questions concerning standardization in the electrical and electronic fields. To this end and in addition to other activities, IEC publishes International Standards, Technical Specifications, Technical Reports, Publicly Available Specifications (PAS) and Guides (hereafter referred to as "IEC Publication(s)"). Their preparation is entrusted to technical committees; any IEC National Committee interested in the subject dealt with may participate in this preparatory work. International, governmental and non-governmental organizations liaising with the IEC also participate in this preparation. IEC collaborates closely with the International Organization for Standardization (ISO) in accordance with conditions determined by agreement between the two organizations.
2) The formal decisions or agreements of IEC on technical matters express, as nearly as possible, an international consensus of opinion on the relevant subjects since each technical committee has representation from all interested IEC National Committees.
3) IEC Publications have the form of recommendations for international use and are accepted by IEC National Committees in that sense. While all reasonable efforts are made to ensure that the technical content of IEC Publications is accurate, IEC cannot be held responsible for the way in which they are used or for any misinterpretation by any end user.
4) In order to promote international uniformity, IEC National Committees undertake to apply IEC Publications transparently to the maximum extent possible in their national and regional publications. Any divergence between any IEC Publication and the corresponding national or regional publication shall be clearly indicated in the latter.
5) IEC itself does not provide any attestation of conformity. Independent certification bodies provide conformity assessment services and, in some areas, access to IEC marks of conformity. IEC is not responsible for any services carried out by independent certification bodies.
6) All users should ensure that they have the latest edition of this publication.
7) No liability shall attach to IEC or its directors, employees, servants or agents including individual experts and members of its technical committees and IEC National Committees for any personal injury, property damage or other damage of any nature whatsoever, whether direct or indirect, or for costs (including legal fees) and expenses arising out of the publication, use of, or reliance upon, this IEC Publication or any other IEC Publications.
8) Attention is drawn to the Normative references cited in this publication. Use of the referenced publications is indispensable for the correct application of this publication.
9) Attention is drawn to the possibility that some of the elements of this IEC Publication may be the subject of patent rights. IEC shall not be held responsible for identifying any or all such patent rights.

International Standard IEC 62129-3 has been prepared by IEC technical committee 86: Fibre optics.

This first edition cancels and replaces IEC TS 62129-3, published in 2014.

This edition includes the following significant technical changes with respect to the previous edition:

a) text has been added to 5.2.3 about calibration at a second optical frequency;
b) Annex D is now normative;
c) Subclause 4.2 has been improved;
d) measurement method of frequency has been moved to Annex B;
e) example of optical frequency comb has been moved to Annex C;
f) frequency-dependence uncertainty has been moved to Annex D.

Documents
Document Sharing Hub

Full document details: IEC 62129-3-2019

The text of this International Standard is based on the following documents:

FDIS	Report on voting
86/551/FDIS	86/554/RVD

Full information on the voting for the approval of this International Standard can be found in the report on voting indicated in the above table.

This document has been drafted in accordance with the ISO/IEC Directives, Part 2.

A list of all parts in the IEC 62129 series, published under the general title *Calibration of wavelength/optical frequency measurement instruments*, can be found on the IEC website.

The committee has decided that the contents of this document will remain unchanged until the stability date indicated on the IEC website under "http://webstore.iec.ch" in the data related to the specific document. At this date, the document will be

- reconfirmed,
- withdrawn,
- replaced by a revised edition, or
- amended.

IMPORTANT – The 'colour inside' logo on the cover page of this publication indicates that it contains colours which are considered to be useful for the correct understanding of its contents. Users should therefore print this document using a colour printer.

Documents
Document Sharing Hub

Full document details: IEC 62129-3-2019

INTRODUCTION

It is essential for realizing fibre optic systems that optical channels are defined in the optical frequency domain, not the wavelength domain. One example: the anchor frequency of the ITU-T grid is 193,1 THz, and the channel spacings of the ITU-T grid are 12,5 GHz, 25 GHz, 50 GHz, and 100 GHz [1][1].

ITU-T has also discussed λ-interface systems such as "black link" [2]. "Black link" includes WDM MUX/DEMUX and a transmission fibre, and provides λ-interfaces. Especially in DWDM systems (channel spacing < 100 GHz), the uncertainty in specifying optical frequency needs to be minimized.

To implement future telecom systems, it is expected that optical frequency measurements will need to be extremely precise. For example, to achieve the channel spacing of 25 GHz, signal optical frequency uncertainty (Uf_{sig}) and required measurement uncertainty (Uf_{meas}) need to be 2 GHz to 200 MHz ($Uf_{\mathrm{sig}}/f = 10^{-5}$ to 10^{-6}) and 200 MHz to 2 MHz ($Uf_{\mathrm{meas}}/f = 10^{-6}$ to 10^{-8}), respectively. Unfortunately, conventional wavelength meters have measurement uncertainties of 10^{-6} to 10^{-7}. The solution is to use optical frequency measurements since measurement uncertainties can be as small as 10^{-9}, which satisfies the above telecom requirement ($Uf_{\mathrm{meas}}/f = 10^{-6}$ to 10^{-8}). Therefore, an optical frequency measurement scheme is necessary for the calibration of future telecom systems.

The frequency meter to calibrate with the procedure described in this document is the measurement equipment internally utilizing the optical frequency comb. In Annex A, the mathematical basis for the uncertainty of measurement is described. The measurement procedure of the frequency with the frequency meter utilizing the optical frequency comb is shown in Annex B and the example of the optical frequency comb sources are shown in Annex C. Additionally, the uncertainty depending on the frequency is shown in Annex D.

This document defines all the steps involved in the calibration process of the frequency measuring with the optical frequency meter internally utilizing an optical frequency comb: establishing the calibration conditions, carrying out the calibration, calculating the uncertainty, and reporting the uncertainty, the calibration conditions and the traceability.

[1] Numbers in square brackets refer to the Bibliography.

Documents
Document Sharing Hub

Full document details: IEC 62129-3-2019

CALIBRATION OF WAVELENGTH / OPTICAL FREQUENCY MEASUREMENT INSTRUMENTS –

Part 3: Optical frequency meters internally referenced to a frequency comb

1 Scope

This part of IEC 62129 describes the calibration of optical frequency meters using an optical frequency comb as an internal reference. It is applicable to instruments measuring the optical frequency emitted from sources that are typical for the fibre-optic communications industry. It is assumed that the optical radiation will be coupled to the optical frequency meter by a single-mode optical fibre. This document is part of the IEC 62129 series on the calibration of wavelength/optical frequency measurement instruments. Refer to IEC 62129-1 [3] for the calibration of optical spectrum analyzers, and refer to IEC 62129-2 [4] for calibration of Michelson interferometer single wavelength meters.

2 Normative references

The following documents are referred to in the text in such a way that some or all of their content constitutes requirements of this document. For dated references, only the edition cited applies. For undated references, the latest edition of the referenced document (including any amendments) applies.

IEC 60793-2-50, *Optical fibres – Part 2-50: Product specifications – Sectional specification for class B single-mode fibres*

IEC 60825-1, *Safety of laser products – Part 1: Equipment classification and requirements*

IEC 60825-2, *Safety of laser products – Part 2: Safety of optical fibre communication systems (OFCS)*

IEC TR 61931, *Fibre optic – Terminology*

ISO/IEC Guide 98-3:2008, *Uncertainty of measurement – Part 3: Guide to the expression of uncertainty in measurement (GUM:1995)*

3 Terms and definitions

For the purposes of this document, the terms and definitions given in IEC TR 61931, and the following apply.

ISO and IEC maintain terminological databases for use in standardization at the following addresses:

- IEC Electropedia: available at http://www.electropedia.org/
- ISO Online browsing platform: available at http://www.iso.org/obp

Documents
Document Sharing Hub

Full document details: IEC 62129-3-2019

3.1
accredited calibration laboratory
calibration laboratory authorized by the appropriate national organization to issue calibration certificates with a minimum specified uncertainty, which demonstrate traceability to national measurement standards (3.3)

3.2
calibration
set of operations that establish, under specified conditions, the relationship between the values of quantities indicated by a measuring instrument and the corresponding values realized by measurement standards

Note 1 to entry: The result of a calibration permits either the assignment of values of measurands to the indications or the determination of corrections with respect to indications.

Note 2 to entry: A calibration may also determine other metrological properties such as the effect of influence quantities.

Note 3 to entry: The result of a calibration may be recorded in a document, sometimes called a calibration certificate or a calibration report.

[SOURCE: ISO/IEC Guide 99:2007 [5], 2.39, modified – Only the first part of the definition has been used and the notes to entry have been modified.]

3.3
national measurement standard
standard recognized by a national decision to serve, in a country, as the basis for assigning values to other standards for the quantity concerned

[ISO/IEC Guide 99:2007, 5.3, modified – Some terms have been replaced with similar meaning.]

3.4
reference standard
standard, generally having the highest metrological quality available at a given location or in a given organization, from which measurements made therein are derived

Note 1 to entry: The general definition of this term is described in ISO/IEC Guide 99:2007, 5.6.

3.5
traceability
property of the result of a measurement or the value of a measurement standard whereby it can be related to stated references, usually national or international measurement standards, through an unbroken chain of comparisons all having stated uncertainties

Note 1 to entry: The general definition of this term is described in ISO/IEC Guide 99:2007, 2.41.

3.6
traceability chain
unbroken chain of comparison

Note 1 to entry: The general definition of this term is described in ISO/IEC Guide 99:2007, 2.42.

3.7
working standard
measurement standard that is used routinely to calibrate or check measuring instruments

Note 1 to entry: A working standard is usually calibrated against a reference standard.

Note 2 to entry: The general definition of this term is described in ISO/IEC Guide 99:2007, 5.7.

Documents
Document Sharing Hub

Full document details: IEC 62129-3-2019

4 Calibration test requirements

4.1 Organization

The calibration laboratory should ensure that suitable requirements for calibration are followed.

NOTE Guidance about good practices for calibration can be found in ISO/IEC 17025 [6].

There shall be a documented measurement procedure for each type of calibration performed, giving step-by-step operating instructions and equipment to be used.

4.2 Traceability

The calibration laboratory should ensure that suitable requirements for traceability are followed.

NOTE Guidance about good practices for traceability can be found in ISO/IEC 17025.

Make sure that any test equipment which has a significant influence on the calibration results is calibrated. Upon request, specify this test equipment and its calibration chain(s). The recalibration period(s) shall be defined and documented.

4.3 Preparation

The environmental conditions shall be commensurate with the degree of uncertainty that is required for calibration:

a) the environment shall be clean;

b) temperature monitoring and control is required;

c) all laser sources shall be safely operated (refer to IEC 60825-1 and to IEC 60825-2).

4.4 Reference calibration conditions

The reference calibration conditions usually include the following parameters and, if necessary, their tolerance bands: date, temperature, relative humidity, displayed power level, displayed optical frequency, fibre, (spectral) bandwidth and resolution bandwidth (spectral resolution) set. Unless otherwise specified, use a single-mode optical fibre input pigtail as specified in IEC 60793-2-50, having a length of at least 2 m.

The calibration should be made in a temperature-controlled environment. The recommended temperature is 23 °C. Depending on the desired uncertainty, the temperature, atmospheric pressure and humidity may need to be monitored during the measurement.

Operate the optical frequency meter in accordance with the manufacturer's specifications and operating procedures. Where practical, select a range of test conditions and parameters which emulate the actual field operating conditions of the optical frequency meter under test. Choose these parameters so as to optimize the optical frequency meter's uncertainties, as specified by the manufacturer's operating procedures.

NOTE The calibration results only apply to the set of test conditions used in the calibration process.

5 Optical frequency calibration

5.1 Establishing the calibration conditions

Establishing and maintaining the calibration conditions is an important part of the calibration, because any change of these conditions is capable of producing erroneous measurement results. The calibration conditions should be a close approximation to the intended operating conditions. This ensures that the (additional) uncertainty in the operating environment is as small as possible. The calibration conditions should be specified in the form of nominal values.

AVA Documents
Document Sharing Hub

Full document details: IEC 62129-3-2019

with uncertainties when applicable. In order to meet the requirements of this document, the calibration conditions shall at least consist of:

a) date of calibration;

b) ambient temperature, for example 23 °C. The temperature may need to be monitored continuously to ensure that it remains within the requisite limits;

c) ambient relative humidity, for example 30 % to 70 %. The ambient relative humidity may need to be monitored continuously to ensure that it remains within the requisite limits. A relative humidity below the condensation point is assumed by default;

d) input optical power (that has to fall within the allowable specification for the optical frequency meters);

e) if a transition locked source is used, then the quality of the lock shall be continuously monitored during the measurements; a lock indicator can be sufficient.

The above conditions may not be exhaustive. There might be other parameters that have a significant influence on the calibration uncertainty.

5.2 Calibration procedure

5.2.1 General

The main steps of the calibration procedure are as follows:

a) establish and record the appropriate calibration conditions (see 5.1). Switch on all instrumentation and wait until it stabilizes;

b) set up the reference source in accordance with condition 5.1 d);

c) set up the instrument state of the test optical frequency meter according to the instruction manual. Select appropriate units;

d) record the instrument states of the optical frequency meter.

5.2.2 Measurement configuration

Two possible configurations can be used for calibration. One uses a stabilized laser as shown in Figure 1, and the other uses a reference frequency meter as shown in Figure 2.

Figure 1 shows the configuration using the reference source.

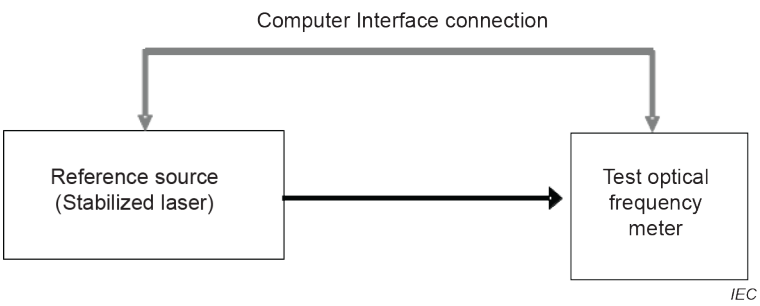

Figure 1 – Optical frequency meter measurement using a reference source

Figure 2 shows the configuration using a reference optical frequency meter.

It is necessary that the measurements be performed simultaneously on both the reference and the test optical frequency meters.

Documents
Document Sharing Hub
Full document details: IEC 62129-3-2019

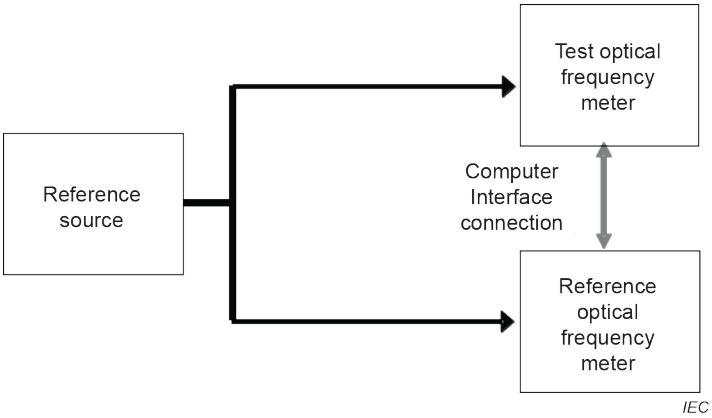

Figure 2 – Optical frequency meter measurement using a reference optical frequency meter

5.2.3 Detailed procedure

The measurement process is as follows:

a) allow the equipment to reach equilibrium;

b) configure the data acquisition software;

c) ensure that the optical source is operating correctly;

d) run the data acquisition software.

The correction factor (CF) is determined from the difference between the reference optical frequency and the mean values from each measurement:

$$CF = f_{\text{ref}} - \frac{1}{n}\sum_{i=1}^{n} f_{\text{test}_i} \tag{1}$$

where

f_{ref} is the reference optical frequency, which is the frequency of the reference stabilized laser in calibration of Figure 1 and the frequency of the reference frequency meter in calibration of Figure 2, and

f_{test} is the optical frequency measured by the test optical frequency meter.

In order to obtain the statistical stability of the measurement, it is desirable to take 50 samples (n), for example, per measurement.

It is recommended to repeat the measurement at a second reference optical frequency in case there is an error in the comb spacing frequency. This is described in Annex D.

NOTE The number of measurements averaged per reading affects the size of the results file, the rejection of data by the measurement routine, and the frequency stability of the reference source. A large number of samples per measurement will increase the size of the data set used to check that the extreme data points are valid, and uncertainty of the reference source frequency and the n can be determined with the method of statistical rejection of outlying points described in Annex B of IEC 62129-2:2011.

5.3 Calibration uncertainty

The mathematical basis, Annex A, should be used to calculate and state the uncertainty. Note that the following list may not be complete; additional contributions may have to be taken into account, depending on the measurement setup and procedure:

Documents
Document Sharing Hub
Full document details: IEC 62129-3-2019

a) stability measurement (drift of equipment during measurements taken over a long period of time);

b) "on/off repeatability" measurement (uncertainty of measured value in repeat of on and off of electric power supply);

c) frequency dependence measurement (difference in uncertainty due to measured frequency);

d) uncertainty of the reference frequency meter;

e) reference source uncertainty (how well the source is stabilized to the natural standard, for example to a molecular absorption line);

f) display resolution of the test frequency meter (difference between the measured value and displayed value that might be degraded due to resolution);

g) temperature and relative humidity (uncertainty of performance of components embedded in the equipment due to environmental conditions).

5.4 Reporting the results

Suitable requirements for reporting the results of each calibration should be followed.

NOTE Guidance about good practices for reporting the results of calibration can be found in ISO/IEC 17025.

Calibration certificates referring to this document shall, at a minimum, include the following information:

a) all calibration conditions of the calibration process as described in 5.1;

b) the test meter's correction factor(s) or deviation(s), if the test meter was not adjusted;

c) on receipt, correction factors or deviations and, after adjustment, correction factors or deviations in the case that an adjustment was carried out;

d) the calibration uncertainty in the form of an expanded uncertainty as described in 5.3 and Annex A;

e) the configuration of the test meter during the calibration;

f) evidence that the measurements are traceable (see ISO/IEC 17025).

6 Absolute power calibration

Currently, the frequency meter does not have the function to measure the optical power at a specific optical frequency due to its measurement principle. If the frequency meter has a power measurement capability in the future, then it shall be calibrated using the power meter calibration procedure (IEC 61315 [7]).

Documents
Document Sharing Hub

Full document details: IEC 62129-3-2019

Annex A
(normative)

Mathematical basis for measurement uncertainty calculations

A.1 General

This annex summarizes the form of evaluating, combining and reporting the uncertainty of measurement. It is based on ISO/IEC Guide 98-3. Annex A shall be read in conjunction with ISO/IEC Guide 98-3 for additional information.

This annex distinguishes two types of evaluation of uncertainty of measurement. Type A is the method of evaluation of uncertainty by the statistical analysis of a series of measurements on the same measurand. Type B is the method of evaluation of uncertainty based on other knowledge.

A.2 Type A evaluation of uncertainty

Type A evaluation of standard uncertainty can be applied when several independent observations have been made for a quantity under the same conditions of measurement.

For a quantity X estimated from n independent repeated observations X_i, the arithmetic mean is:

$$\overline{X} = \frac{1}{n}\sum_{i=1}^{n}\left(X_i\right) \tag{A.1}$$

This mean is used as the estimate of the quantity, that is $x = \overline{X}$. The experimental standard deviation of the observations is given by:

$$s\left(X\right) = \left[\frac{1}{n-1}\sum_{i=1}^{n}\left(X_i - \overline{X}\right)^2\right]^{1/2} \tag{A.2}$$

where

$\overline{X}$ is the arithmetic mean of the observed values;

X_i are the measurement samples of a series of measurements;

n is the number of measurements; it is assumed to be large, for example, $n \geq 10$.

The type A standard uncertainty $u_{\text{typeA}}(x)$ associated with the estimate x is the experimental standard deviation of the mean.

$$u_{\text{typeA}}\left(x\right) = s\left(\overline{X}\right) = \frac{s\left(X\right)}{\sqrt{n}} \tag{A.3}$$

A.3 Type B evaluation of uncertainty

Type B evaluation of standard uncertainty is the method of evaluating the uncertainty by means other than the statistical analysis of a series of observations. It is evaluated by scientific judgement based on all available information on the variability of the quantity.

Documents
Document Sharing Hub
Full document details: IEC 62129-3-2019