# IEC 62132-2

Edition 1.0 2010-03

# INTERNATIONAL STANDARD

# NORME INTERNATIONALE

## Integrated circuits – Measurement of electromagnetic immunity – Part 2: Measurement of radiated immunity – TEM cell and wideband TEM cell method

## Circuits intégrés – Mesure de l'immunité electromagnétique – Partie 2: Mesure de l'immunité rayonnée – Méthode de cellule TEM et cellule TEM à large bande

IEC 62132-2:2010

Documents
Document Sharing Hub

Full document details: IEC 62132-2 2010

**THIS PUBLICATION IS COPYRIGHT PROTECTED**

**Copyright © 2010 IEC, Geneva, Switzerland**

All rights reserved. Unless otherwise specified, no part of this publication may be reproduced or utilized in any form or by any means, electronic or mechanical, including photocopying and microfilm, without permission in writing from either IEC or IEC's member National Committee in the country of the requester.
If you have any questions about IEC copyright or have an enquiry about obtaining additional rights to this publication, please contact the address below or your local IEC member National Committee for further information.

Droits de reproduction réservés. Sauf indication contraire, aucune partie de cette publication ne peut être reproduite ni utilisée sous quelque forme que ce soit et par aucun procédé, électronique ou mécanique, y compris la photocopie et les microfilms, sans l'accord écrit de la CEI ou du Comité national de la CEI du pays du demandeur.
Si vous avez des questions sur le copyright de la CEI ou si vous désirez obtenir des droits supplémentaires sur cette publication, utilisez les coordonnées ci-après ou contactez le Comité national de la CEI de votre pays de résidence.

IEC Central Office
3, rue de Varembé
CH-1211 Geneva 20
Switzerland
Email: inmail@iec.ch
Web: www.iec.ch

## About the IEC

The International Electrotechnical Commission (IEC) is the leading global organization that prepares and publishes International Standards for all electrical, electronic and related technologies.

## About IEC publications

The technical content of IEC publications is kept under constant review by the IEC. Please make sure that you have the latest edition, a corrigenda or an amendment might have been published.

- Catalogue of IEC publications: www.iec.ch/searchpub
The IEC on-line Catalogue enables you to search by a variety of criteria (reference number, text, technical committee,…). It also gives information on projects, withdrawn and replaced publications.
- IEC Just Published: www.iec.ch/online_news/justpub
Stay up to date on all new IEC publications. Just Published details twice a month all new publications released. Available on-line and also by email.
- Electropedia: www.electropedia.org
The world's leading online dictionary of electronic and electrical terms containing more than 20 000 terms and definitions in English and French, with equivalent terms in additional languages. Also known as the International Electrotechnical Vocabulary online.
- Customer Service Centre: www.iec.ch/webstore/custserv
If you wish to give us your feedback on this publication or need further assistance, please visit the Customer Service Centre FAQ or contact us:
Email: csc@iec.ch
Tel.: +41 22 919 02 11
Fax: +41 22 919 03 00

---

## A propos de la CEI

La Commission Electrotechnique Internationale (CEI) est la première organisation mondiale qui élabore et publie des normes internationales pour tout ce qui a trait à l'électricité, à l'électronique et aux technologies apparentées.

## A propos des publications CEI

Le contenu technique des publications de la CEI est constamment revu. Veuillez vous assurer que vous possédez l'édition la plus récente, un corrigendum ou amendement peut avoir été publié.

- Catalogue des publications de la CEI: www.iec.ch/searchpub/cur_fut-f.htm
Le Catalogue en-ligne de la CEI vous permet d'effectuer des recherches en utilisant différents critères (numéro de référence, texte, comité d'études,…). Il donne aussi des informations sur les projets et les publications retirées ou remplacées.
- Just Published CEI: www.iec.ch/online_news/justpub
Restez informé sur les nouvelles publications de la CEI. Just Published détaille deux fois par mois les nouvelles publications parues. Disponible en-ligne et aussi par email.
- Electropedia: www.electropedia.org
Le premier dictionnaire en ligne au monde de termes électroniques et électriques. Il contient plus de 20 000 termes et définitions en anglais et en français, ainsi que les termes équivalents dans les langues additionnelles. Egalement appelé Vocabulaire Electrotechnique International en ligne.
- Service Clients: www.iec.ch/webstore/custserv/custserv_entry-f.htm
Si vous désirez nous donner des commentaires sur cette publication ou si vous avez des questions, visitez le FAQ du Service clients ou contactez-nous:
Email: csc@iec.ch
Tél.: +41 22 919 02 11
Fax: +41 22 919 03 00

Documents
Document Sharing Hub

Full document details: IEC 62132-2 2010

# IEC 62132-2

Edition 1.0 2010-03

# INTERNATIONAL STANDARD

# NORME INTERNATIONALE

## Integrated circuits – Measurement of electromagnetic immunity – Part 2: Measurement of radiated immunity – TEM cell and wideband TEM cell method

## Circuits intégrés – Mesure de l'immunité electromagnétique – Partie 2: Mesure de l'immunité rayonnée – Méthode de cellule TEM et cellule TEM à large bande

INTERNATIONAL
ELECTROTECHNICAL
COMMISSION

COMMISSION
ELECTROTECHNIQUE
INTERNATIONALE

PRICE CODE
CODE PRIX

T

ICS 31.200

ISBN 978-2-88910-624-0

® Registered trademark of the International Electrotechnical Commission
Marque déposée de la Commission Electrotechnique Internationale

Documents
Document Sharing Hub

Full document details: IEC 62132-2 2010

CONTENTS

FOREWORD ... 3
1 Scope ... 5
2 Normative references ... 5
3 Terms and definitions ... 5
4 General ... 6
5 Test conditions ... 7
6 Test equipment ... 7
6.1 General ... 7
6.2 Cables ... 7
6.3 RF disturbance source ... 7
6.4 TEM cell ... 8
6.5 Gigahertz TEM cell ... 8
6.6 50-Ω termination ... 8
6.7 DUT monitor ... 8
7 Test set-up ... 8
7.1 General ... 8
7.2 Test set-up details ... 8
7.3 EMC test board ... 10
8 Test procedure ... 10
8.1 General ... 10
8.2 Immunity measurement ... 10
8.2.1 General ... 10
8.2.2 RF disturbance signals ... 10
8.2.3 Test frequencies ... 11
8.2.4 Test levels and dwell time ... 11
8.2.5 DUT monitoring ... 11
8.2.6 Detail procedure ... 11
9 Test report ... 12
Annex A (normative) Field strength characterization procedure ... 13
Annex B (informative) TEM CELL and wideband TEM cell descriptions ... 21
Bibliography ... 22

Figure 1 – TEM and GTEM cell cross-section ... 9
Figure 2 – TEM cell test set-up ... 9
Figure 3 – GTEM cell test set-up ... 10
Figure 4 – Immunity measurement procedure flowchart ... 12
Figure A.1 – E-field characterization test fixture ... 14
Figure A.2 – The electric field to voltage transfer function ... 16
Figure A.3 – H-field characterization test fixture ... 19
Figure A.4 – The magnetic field to voltage transfer function ... 20

Documents
Document Sharing Hub
Full document details: IEC 62132-2 2010

INTERNATIONAL ELECTROTECHNICAL COMMISSION

# INTEGRATED CIRCUITS – MEASUREMENT OF ELECTROMAGNETIC IMMUNITY –

## Part 2: Measurement of radiated immunity – TEM cell and wideband TEM cell method

## FOREWORD

1) The International Electrotechnical Commission (IEC) is a worldwide organization for standardization comprising all national electrotechnical committees (IEC National Committees). The object of IEC is to promote international co-operation on all questions concerning standardization in the electrical and electronic fields. To this end and in addition to other activities, IEC publishes International Standards, Technical Specifications, Technical Reports, Publicly Available Specifications (PAS) and Guides (hereafter referred to as "IEC Publication(s)"). Their preparation is entrusted to technical committees; any IEC National Committee interested in the subject dealt with may participate in this preparatory work. International, governmental and non-governmental organizations liaising with the IEC also participate in this preparation. IEC collaborates closely with the International Organization for Standardization (ISO) in accordance with conditions determined by agreement between the two organizations.
2) The formal decisions or agreements of IEC on technical matters express, as nearly as possible, an international consensus of opinion on the relevant subjects since each technical committee has representation from all interested IEC National Committees.
3) IEC Publications have the form of recommendations for international use and are accepted by IEC National Committees in that sense. While all reasonable efforts are made to ensure that the technical content of IEC Publications is accurate, IEC cannot be held responsible for the way in which they are used or for any misinterpretation by any end user.
4) In order to promote international uniformity, IEC National Committees undertake to apply IEC Publications transparently to the maximum extent possible in their national and regional publications. Any divergence between any IEC Publication and the corresponding national or regional publication shall be clearly indicated in the latter.
5) IEC itself does not provide any attestation of conformity. Independent certification bodies provide conformity assessment services and, in some areas, access to IEC marks of conformity. IEC is not responsible for any services carried out by independent certification bodies.
6) All users should ensure that they have the latest edition of this publication.
7) No liability shall attach to IEC or its directors, employees, servants or agents including individual experts and members of its technical committees and IEC National Committees for any personal injury, property damage or other damage of any nature whatsoever, whether direct or indirect, or for costs (including legal fees) and expenses arising out of the publication, use of, or reliance upon, this IEC Publication or any other IEC Publications.
8) Attention is drawn to the Normative references cited in this publication. Use of the referenced publications is indispensable for the correct application of this publication.
9) Attention is drawn to the possibility that some of the elements of this IEC Publication may be the subject of patent rights. IEC shall not be held responsible for identifying any or all such patent rights.

International Standard IEC 62132-2 has been prepared by subcommittee 47A: Integrated circuits, of IEC technical committee 47: Semiconductor devices.

The text of this standard is based on the following documents:

| FDIS | Report on voting |
|---|---|
| 47A/838/FDIS | 47A/843/RVD |

Full information on the voting for the approval of this standard can be found in the report on voting indicated in the above table.

This publication has been drafted in accordance with the ISO/IEC Directives, Part 2.

This part of IEC 62132 is to be read in conjunction with IEC 62132-1.

Documents
Document Sharing Hub

Full document details: IEC 62132-2 2010

The committee has decided that the contents of this publication will remain unchanged until the stability date indicated on the IEC web site under "http://webstore.iec.ch" in the data related to the specific publication. At this date, the publication will be

- reconfirmed,
- withdrawn,
- replaced by a revised edition, or
- amended.

Future standards in this series will carry the new general title as cited above. Titles of existing standards in this series will be updated at the time of the next edition.

Documents
Document Sharing Hub

Full document details: IEC 62132-2 2010

# INTEGRATED CIRCUITS – MEASUREMENT OF ELECTROMAGNETIC IMMUNITY –

## Part 2: Measurement of radiated immunity – TEM cell and wideband TEM cell method

## 1 Scope

This International Standard specifies a method for measuring the immunity of an integrated circuit (IC) to radio frequency (RF) radiated electromagnetic disturbances. The frequency range of this method is from 150 kHz to 1 GHz, or as limited by the characteristics of the TEM cell.

## 2 Normative references

The following referenced documents are indispensable for the application of this document. For dated references, only the edition cited applies. For undated references, the latest edition of the referenced document (including any amendments) applies.

IEC 60050-131:2002, *International Electrotechnical Vocabulary (IEV) – Part 131: Circuit theory*

IEC 60050-161:1990, *International Electrotechnical Vocabulary (IEV) – Chapter 161: Electromagnetic compatibility*

IEC 61967-2, *Integrated circuits – Measurement of electromagnetic emissions, 150 kHz to 1 GHz – Part 2: Measurement of radiated emissions – TEM cell and wideband TEM cell method*

IEC 62132-1:2006, *Integrated circuits – Measurement of electromagnetic immunity, 150 kHz to 1 GHz – Part 1: General conditions and definitions*

## 3 Terms and definitions

For the purpose of this document, the definitions in IEC 62132-1, IEC 60050-131 and IEC 60050-161, as well as the following, apply.

**3.1**
**transverse electromagnetic mode (TEM)**
waveguide mode in which the components of the electric and magnetic fields in the propagation direction are much less than the primary field components across any transverse cross-section

**3.2**
**TEM waveguide**
open or closed transmission line system, in which a wave is propagating in the transverse electromagnetic mode to produce a specified field for testing purposes.

Documents
Document Sharing Hub
Full document details: IEC 62132-2 2010

**3.3**
**TEM cell**
enclosed TEM waveguide, often a rectangular coaxial line, in which a wave is propagated in the transverse electromagnetic mode to produce a specified field for testing purposes. The outer conductor completely encloses the inner conductor

**3.4**
**two-port TEM waveguide**
TEM waveguide with input/output measurement ports at both ends

**3.5**
**one-port TEM waveguide**
TEM waveguide with a single input/output measurement port

NOTE Such TEM waveguides typically feature a broadband line termination at the non-measurement-port end.

**3.6**
**characteristic impedance**
for any constant phase wave-front, the magnitude of the ratio of the voltage between the inner conductor and the outer conductor to the current on either conductor

NOTE The characteristic impedance is independent of the voltage/current magnitudes and depends only on the cross-sectional geometry of the transmission line. TEM waveguides are typically designed to have a 50 Ω characteristic impedance. TEM waveguides with a 100 Ω characteristic impedance are often used for transient testing.

**3.7**
**anechoic material**
material that exhibits the property of absorbing, or otherwise reducing, the level of electromagnetic energy reflected from that material

**3.8**
**broadband line termination**
termination which combines a low-frequency discrete-component load, to match the characteristic impedance of the TEM waveguides (typically 50 Ω), and a high-frequency anechoic-material volume

**3.9**
**primary (field) component**
electric field component aligned with the intended test polarization

NOTE For example, in conventional two-port TEM cells, the septum is parallel to the horizontal floor, and the primary mode electric field vector is vertical at the transverse centre of the TEM cell.

**3.10**
**secondary (field) component**
in a Cartesian coordinate system, either of the two electric field components orthogonal to the primary field component and orthogonal to each other

## 4 General

The IC to be evaluated for EMC performance is referred to as the device under test (DUT). The DUT shall be mounted on a printed circuit board (PCB), referred to as the EMC test board. The EMC test board is provided with the appropriate measurement or monitoring points at which the DUT response parameters can be measured.

The EMC test board is clamped to a mating port (referred to as a wall port) cut in the top or bottom of a transverse electromagnetic mode (TEM) cell. Either a two-port TEM cell or a one-port TEM cell may be used. Within this standard, a two-port TEM cell is referred to as a TEM cell while a one-port TEM cell is referred to as a wideband (Gigahertz) TEM or GTEM cell.

AVA Documents Document Sharing Hub

Full document details: IEC 62132-2 2010

The test board is not positioned inside the cell, as in the conventional usage, but becomes a part of the cell wall. This method is applicable to any TEM or GTEM cell modified to incorporate the wall port; however, the measured response of the DUT will be affected by many factors. The primary factor affecting the DUT's response is the septum to EMC test board (cell wall) spacing.

NOTE 1 This procedure was developed using a 1 GHz TEM cell with a septum to housing spacing of 45 mm and a GTEM cell with a septum to housing spacing of 45 mm at the centre of the wall port.

The EMC test board controls the geometry and orientation of the DUT relative to the cell and eliminates any connecting leads within the cell (these are on the backside of the board, which is outside the cell). For the TEM cell, one of the 50 Ω ports is terminated with a 50 Ω load. The other 50 Ω port for a TEM cell, or the single 50 Ω port for a GTEM cell, is connected to the output of an RF disturbance generator. The injected CW disturbance signal exposes the DUT to a plane wave electromagnetic field where the electric field component is determined by the injected voltage and the distance between the DUT and the septum of the cell. The relationship is given by

$$E = V/h$$

where

$E$ is the field strength (V/m) within the cell;

$V$ is the applied voltage (V) across the 50 Ω load; and

$h$ is the height (m) between the septum and the centre of the IC package.

Rotating the EMC test board in the four possible orientations in the wall port of the TEM or GTEM cell is required to determine the sensitivity of the DUT to induced magnetic fields. Dependent upon the DUT, the response parameters of the DUT may vary (e.g. a change of current consumption, deterioration in function performance, waveform jitter, etc.) The intent of this test method is to provide a quantitative measure of the RF immunity of ICs for comparison or other purposes.

NOTE 2 Additional information on the use and characterization of TEM cells for radiated immunity testing can be found in IEC 61000-4-20.

## 5 Test conditions

The test conditions shall meet the requirements as described in IEC 62132-1.

## 6 Test equipment

### 6.1 General

The test equipment shall meet the requirements as described in IEC 62132-1. In addition, the following test equipment requirements shall apply.

### 6.2 Cables

Double shielded or semi-rigid coaxial cable may be required depending on the local RF ambient conditions.

### 6.3 RF disturbance source

The RF disturbance source may comprise an RF signal generator with a modulation function, an RF power amplifier, and an optional variable attenuator. The gain (or attenuation) of the RF disturbance generating equipment, without the TEM or GTEM cell, shall be known with a tolerance of ±0,5 dB.

AVA Documents
Document Sharing Hub

Full document details: IEC 62132-2 2010

### 6.4 TEM cell

The TEM cell used for this test procedure is a two-port TEM waveguide and shall be fitted with a wall port sized to mate with the EMC test board. The TEM cell shall not exhibit higher order modes over the frequency range being measured. For this procedure, the recommended TEM cell frequency range is 150 kHz to the frequency of the first resonance of the lowest higher order mode (typically <2 GHz). The frequency range being evaluated shall be covered using only a single cell.

The VSWR of the TEM cell over the frequency range being measured shall be less than 1,5. However, due to the potential for error when calculating the applied E-field, a TEM cell with a VSWR of less than 1,2 is preferred. A TEM cell with a VSWR less than 1,2 does not require field strength characterization. A TEM cell with a VSWR larger than or equal to 1,2 but less than 1,5 shall be characterized in accordance with the procedure in Annex A. The raw TEM cell VSWR data (over the frequency range of the measurement) shall be included in the test report. Measurement results obtained from a TEM cell with a VSWR of less than 1,2 will prevail over data taken from a TEM cell with a higher VSWR.

### 6.5 Gigahertz TEM cell

The Gigahertz, or wideband, TEM (GTEM) cell used for this test procedure is a one-port TEM waveguide and shall be fitted with a wall port sized to mate with the EMC test board. The GTEM cell shall not exhibit higher order modes over the frequency range being measured. For this procedure, the recommended GTEM cell frequency range is from 150 kHz to the frequency of the first resonance of the lowest higher order mode (typically >2 GHz). The frequency range being evaluated shall be covered using a single cell.

The VSWR of the GTEM cell over the frequency range being measured shall be less than 1,5. However, due to the potential for error when calculating the applied E-field, a GTEM cell with a VSWR of less than 1,2 is preferred. A GTEM cell with a VSWR less than 1,2 does not require field strength characterization. A GTEM cell with a VSWR larger than or equal to 1,2 but less than 1,5 shall be characterized in accordance with the procedure in Annex A. The raw GTEM cell VSWR data (over the frequency range of the measurement) shall be included in the test report. Measurement results obtained from a GTEM cell with a VSWR of less than 1,2 will prevail over data taken from a GTEM cell with a higher VSWR.

### 6.6 50 Ω termination

A 50 Ω termination with a VSWR less than 1,1 and sufficient power handling capabilities over the frequency range of measurement is required for the TEM cell measurement port not connected to the RF disturbance generator.

### 6.7 DUT monitor

The performance of the DUT shall be monitored for indications of performance degradation. The monitoring equipment shall not be adversely affected by the injected RF disturbance signal.

## 7 Test set-up

### 7.1 General

The test set-up shall meet the requirements as described in IEC 62132-1. In addition, the following test set-up requirements shall apply.

### 7.2 Test set-up details

The EMC test board shall be mounted in the wall port of the TEM cell or GTEM cell with the DUT facing the septum as shown in Figure 1.

AVA Documents
Document Sharing Hub

Full document details: IEC 62132-2 2010

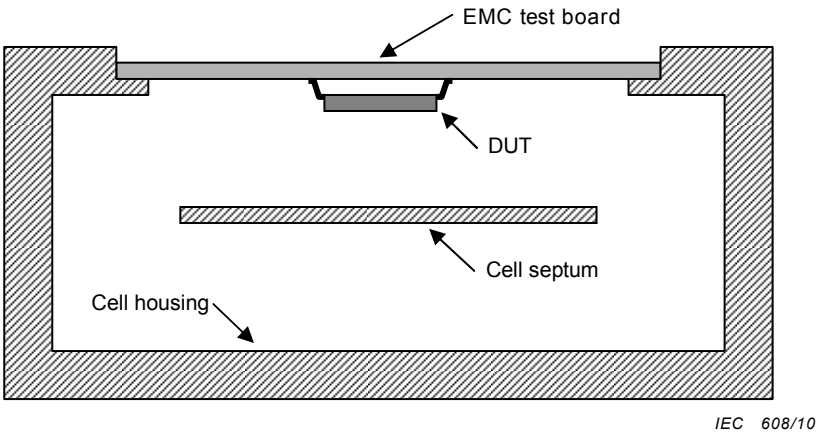


**Figure 1 – TEM and GTEM cell cross-section**

The test setup shall be as described in Figure 2 and Figure 3 for TEM cell and GTEM cell test configurations, respectively. One of the TEM cell measurement ports shall be terminated with a 50 Ω load. The remaining TEM cell measurement port, or the single GTEM measurement port, shall be connected to the output port of the power amplifier.

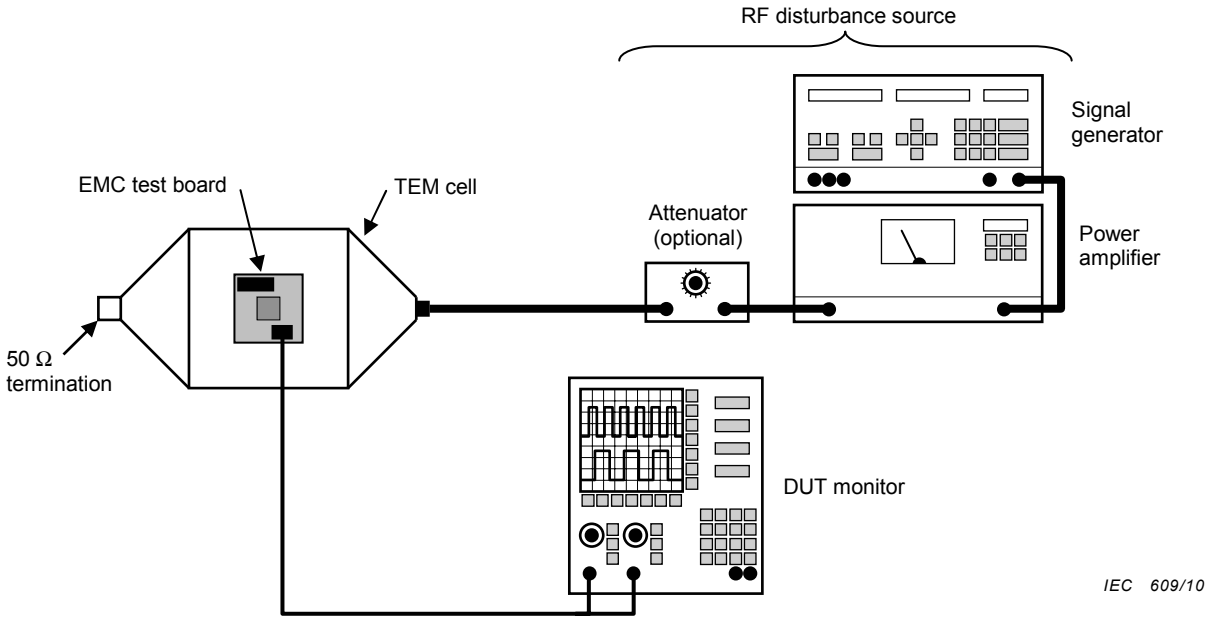


**Figure 2 – TEM cell test set-up**

Documents
Document Sharing Hub
Full document details: IEC 62132-2 2010

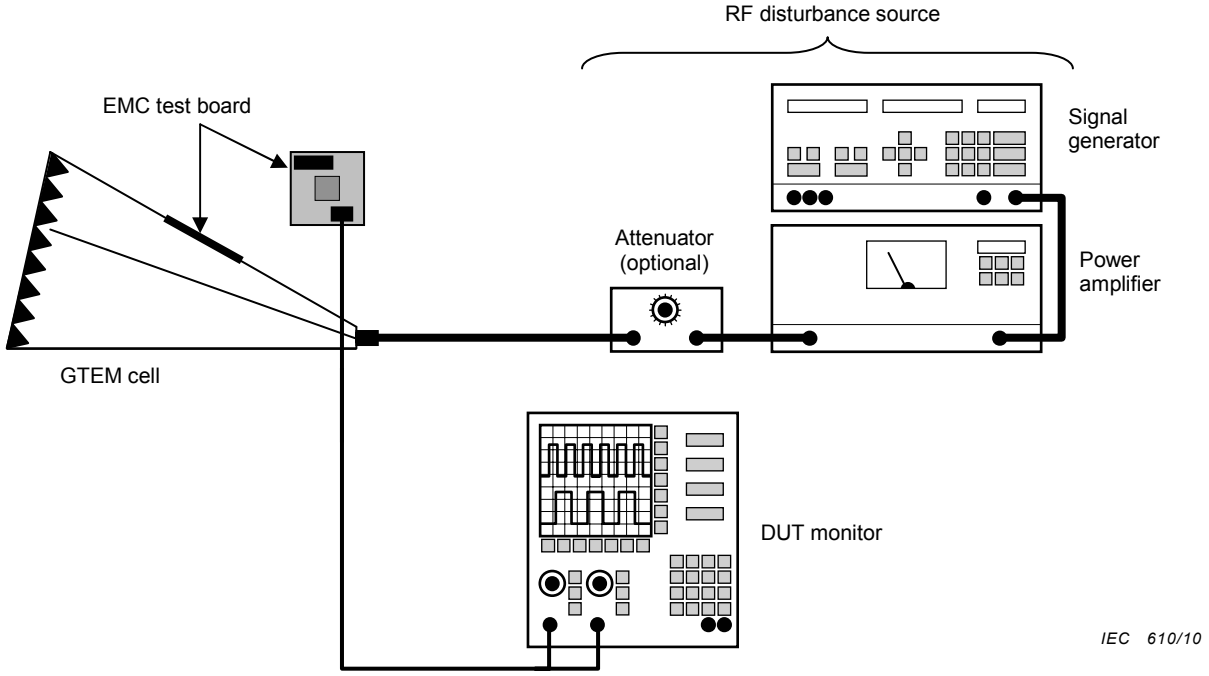


**Figure 3 – GTEM cell test set-up**

### 7.3 EMC test board

The EMC test board shall be designed in accordance with the requirements in IEC 61967-2.

## 8 Test procedure

### 8.1 General

The test procedure shall be in accordance with IEC 62132-1 except as modified herein. These default test conditions are intended to assure a consistent test environment. The following steps shall be performed:

a) field strength characterization (see Annex A);

b) immunity measurement (see 8.2).

If the users of this procedure agree to other conditions, these conditions shall be documented in the test report.

### 8.2 Immunity measurement

#### 8.2.1 General

With the EMC test board energized and the DUT being operated in the intended test mode, measure the immunity to the injected RF disturbance signal over the desired frequency range.

#### 8.2.2 RF disturbance signals

The RF disturbance signals shall be

- CW (continuous wave) and
- AM (amplitude modulated CW) at 80 % depth by a 1 kHz sine wave or (optionally) pulse modulated at 100 % depth with 50 % duty cycle and 1 kHz pulse repetition rate.

AVA Documents Document Sharing Hub

Full document details: IEC 62132-2 2010

NOTE The optional pulse modulation requirement is typically about 6 dB more severe than the stated amplitude modulation requirement.

### 8.2.3 Test frequencies

The RF immunity of the DUT shall be evaluated at a number of discrete test frequencies from 150 kHz to 1 GHz, or as limited by the characteristics of the TEM cell. The frequencies to be tested shall be generated from the requirements specified in Table 2 of IEC 62132-1.

In addition, the RF immunity of the DUT shall be evaluated at critical frequencies. Critical frequencies are frequencies that are generated by, received by, or operated on by the DUT. Critical frequencies include but are not limited to crystal frequencies, oscillator frequencies, clock frequencies, data frequencies, etc.

### 8.2.4 Test levels and dwell time

The applied test level shall be increased in steps until a malfunction is observed or the maximum signal generator setting is reached. The step size shall be documented in the test report.

At each test level and frequency, the RF disturbance signal shall be applied for a minimum of 1 s (or at least the time necessary for the DUT to respond and the monitoring system to detect any performance degradation).

### 8.2.5 DUT monitoring

The DUT shall be monitored for indications of susceptibility using the appropriate test equipment and as required in IEC 62132-1.

### 8.2.6 Detail procedure

#### 8.2.6.1 Field strength characterization

At each frequency to be tested, the signal generator setting to achieve the desired electric field level or levels shall be determined as described in Annex A.

#### 8.2.6.2 Immunity measurement

The test flow, including major steps, is described in Figure 4. One of two strategies may be employed in performing this measurement as follows:

a) the output of the RF disturbance generator shall be set at a low value (e.g. 20 dB below the desired limit) and slowly increased up to the desired limit while monitoring the DUT for performance degradation. Any performance degradation at or below the desired limit shall be recorded;

b) the output of the RF disturbance generator shall be set at the desired performance limit while monitoring the DUT for performance degradation. Any performance degradation at the desired limit shall be recorded. The output of the RF disturbance generator shall then be reduced until normal function returns. The output of the RF disturbance generator shall then be increased until the performance degradation occurs again. This level shall also be recorded.

NOTE The DUT may respond differently to each of the above methods. In such a case, a method in which the interference signal is ramped up as well as down may be required.

The RF immunity measurement shall be performed in each of the four possible orientations resulting in four separate sets of data. The first measurement is made with the IC test board mounted in an arbitrary orientation of the IC in the cell wall port. The second measurement is made with the IC test board rotated 90 degrees from the orientation in the first measurement. For each of the third and fourth measurements, the test board is rotated again to ensure

Documents
Document Sharing Hub
Full document details: IEC 62132-2 2010

immunity is measured in all four possible orientations. The four sets of data shall be documented in the test report.

## 9 Test report

The test report shall be in accordance with the requirements of IEC 62132-1.

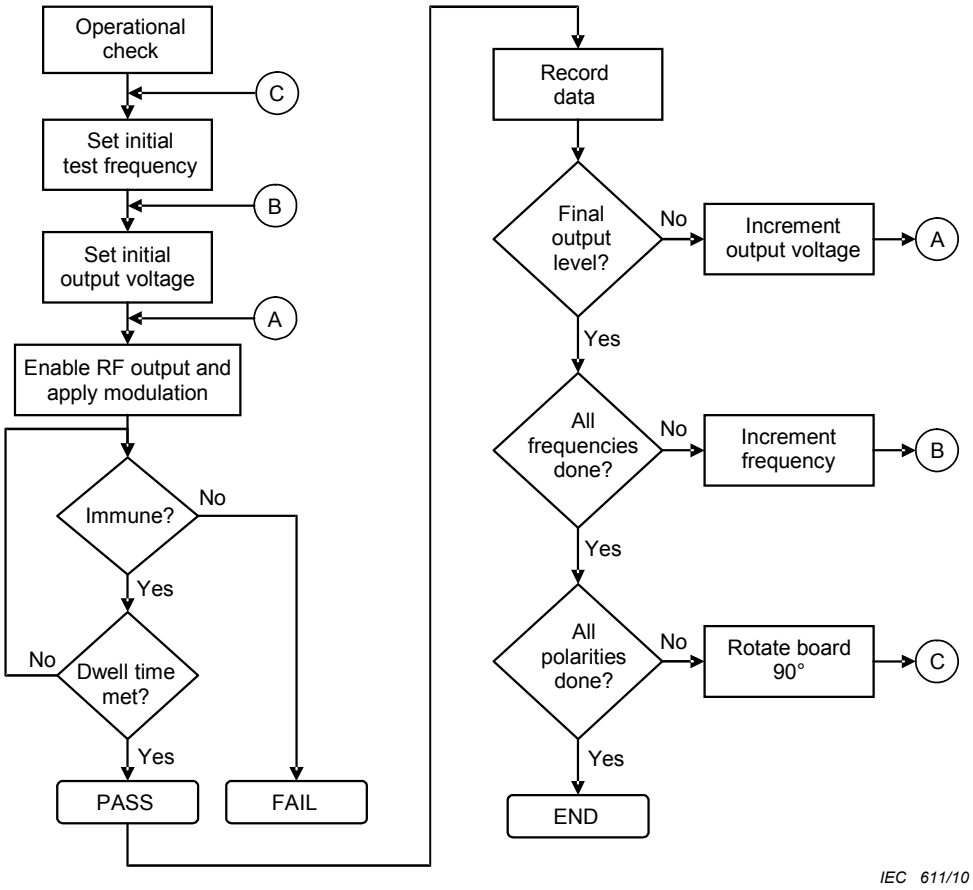


**Figure 4 – Immunity measurement procedure flowchart**

Documents
Document Sharing Hub
Full document details: IEC 62132-2 2010

# Annex A
(normative)

# Field strength characterization procedure

## A.1 General

The signal level setting of the RF disturbance generator required to achieve the desired electric field level within the TEM or GTEM cell shall be determined in accordance with this procedure. This measurement shall be performed at each standard frequency (either linear or logarithmic as used in the actual test) as determined in accordance with 8.2.3. The RF disturbance signal used for characterization shall be a CW signal (e.g. no modulation shall be applied).

## A.2 Electric ($E$) field strength characterization

### A.2.1 Electric field characterization test fixture

The electric field can be measured by using a small monopole antenna at the centre location of the characterization board as shown in Figure A.1. It is recommended that the diameter of the top plate capacitive load shall be small (e.g. an area of approximately 0,001 $m^2$ or 10 $cm^2$) and either circular or square. The antenna top plate shall be kept parallel to the top metallic surface of the characterization board, which may be either a printed circuit board or metal plate, at a height of 3,0 mm ±0,1 mm. This top plate will yield a capacitance of about 3 pF. The centre of this plate shall be fed to a surface-mount, coaxial bulkhead connector that in turn shall be connected to the 50 Ω input impedance of an RF voltmeter or spectrum analyser. The resulting high-pass circuit results in an incremental slope of 20 dB/decade over the full frequency range up to 1 GHz.

The characterization board shall be identical in size to the EMC test board to be used during the actual radiated immunity measurements as specified in IEC 62132-1. The bulkhead connector shall be a 50 Ω type, either SMA or SMB, and placed in the exact centre of the characterization board.

The PCB shall be constructed with at least one conductive layer. The conductive layer should cover the entire board forming a solid ground plane. The SMA or SMB connector should be mounted on the side of the PCB opposite the ground plane, with its outer conductor connected to the ground plane and the centre conductor passing through an unplated, through-hole penetration to the other side of the board. Additional conductive PCB layers should be assigned to ground and connected using multiple vias as shown for the EMC test board in IEC 62132-1.

NOTE Tolerances for top plate area, capacitance and board location are under development.

### A.2.2 Capacitance measurement

The top plate capacitance of the monopole shall be measured separately to assure a capacitance of 3 pF. The capacitance shall be measured with the characterization test fixture inserted into the TEM cell. With the impedance reference plane set at the bulkhead coaxial connector mounted at the location where the device/IC is to be positioned, the monopole is mounted to this bulkhead connector and the impedance (i.e. capacitance) is measured at a reference frequency of 10 MHz. This measurement is made to ensure that the physical length of the wire (i.e. the inductance) does not affect the characterization.

AVA Documents
Document Sharing Hub

Full document details: IEC 62132-2 2010

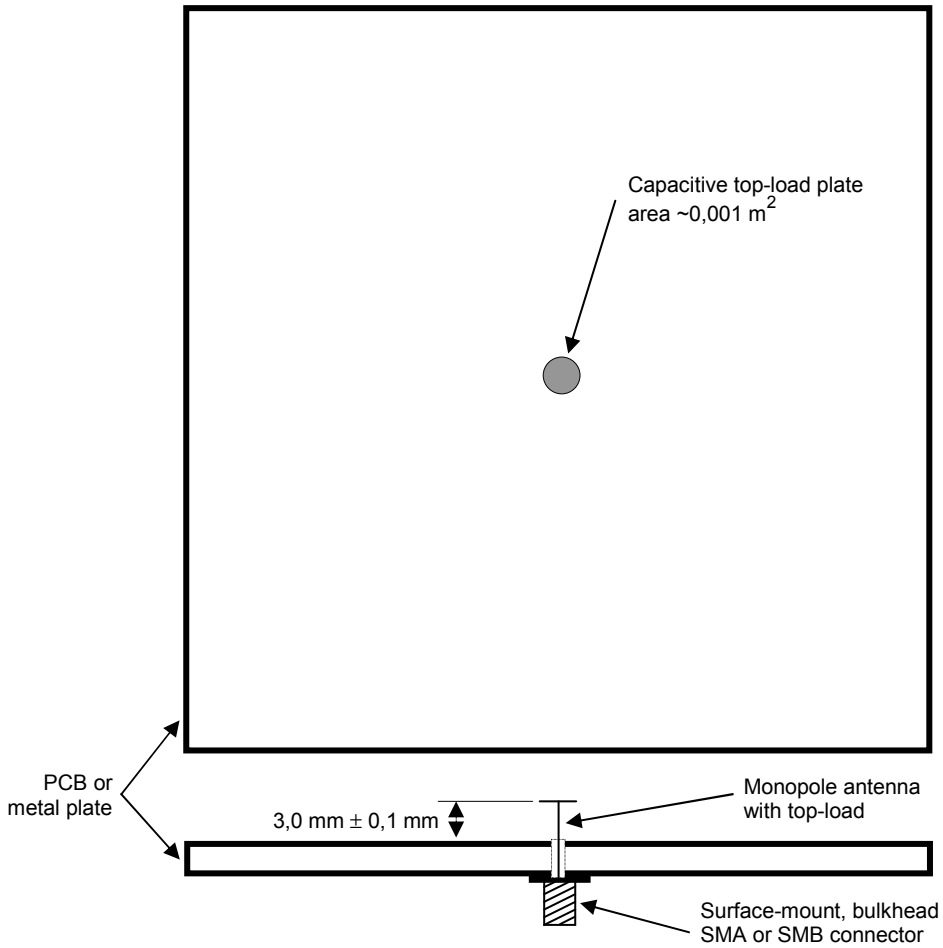


IEC 612/10

In the case of a PCB, a ground plane is required on both sides

**Figure A.1 – $E$ field characterization test fixture**

### A.2.3 Electric field strength calculation

The voltage induced at the output of the monopole antenna is given by

$$V_{\text{ant}} = h_{\text{ant}} \times E_{\text{tem}} \tag{A.1}$$

where

$V_{\text{ant}}$ is the voltage at the test fixture output port, expressed in volts (V), by the internal electric field;

$E_{\text{tem}}$ is the electric field within the TEM or GTEM cell, expressed in volts per meter (V/m);

$h_{\text{ant}}$ is the height of the monopole antenna, expressed in meters (m).

In addition, the electric field in the TEM or GTEM cell is also given by

$$E_{\text{tem}} = \frac{V_{\text{tem}}}{h_{\text{sep}}} \Rightarrow V_{\text{tem}} = E_{\text{tem}} \times h_{\text{sep}} \tag{A.2}$$

where

$V_{\text{tem}}$ is the voltage at the port of the TEM or GTEM cell, expressed in volts (V);

Documents
Document Sharing Hub
Full document details: IEC 62132-2 2010

$h_{sep}$ is the distance from the antenna top load to the inner septum of the TEM or GTEM cell, expressed in meters (m).

So that the resulting transfer function (S21) is given by

$$S21 = \frac{V_{ant}}{V_{tem}} = \frac{h_{ant}}{h_{sep}} \times \frac{50}{\sqrt{(50)^2 + |Z_{ant}|^2}} \quad (A.3)$$

where

$|Z_{ant}|$ is the magnitude of the antenna impedance, given by $|1/(j\omega C)|$ and expressed in ohms (Ω), neglecting resistance.

The antenna impedance is given by

$$|Z_{ant}| = \frac{1}{\omega C_{ant_meas}} = \frac{1}{2\pi f \times C_{ant_meas}} \quad (A.4)$$

where

$C_{ant_meas}$ is the measured antenna capacitance, expressed in farads (F).

### A.2.4 Example electric field strength calculation

At 10 MHz, solving for $V_{ant}$ as a function of $E_{tem}$ using Equation (A.1) gives

$$V_{ant} = \left(3 \times 10^{-3}\right) \times E_{tem}$$

For a monopole antenna with a measured capacitance of 3 pF, the antenna impedance is calculated from Equation (A.4):

$$|Z_{ant,10MHz}| = \frac{1}{2\pi \times (10 \times 10^6 \text{Hz}) \times (3 \times 10^{-12} \text{F})} = 5305\ \Omega$$

So the resulting transfer function at 10 MHz for $h_{sep}$ = 45 mm – 3 mm = 42 mm is calculated using Equation (A.3) giving

$$S21 = \frac{3 \times 10^{-3} \text{m}}{42 \times 10^{-3} \text{m}} \cdot \frac{50}{\sqrt{(50)^2 + (5305)^2}} = 673{,}9 \times 10^{-6}$$

Converting the S21 value to decibels gives the final result as

$$S21_{dB} = 20 \cdot \log\left(673{,}9 \times 10^{-6}\right) = -63{,}43\ \text{dB}$$

The electric field to voltage transfer function given in Equation (A.3) and converted to decibels, for the parameters given above, is plotted in Figure A.2 and is suited for characterization up to 1 GHz. The value of the transfer function shall be compensated for the TEM cell septum-to-device height as given in A.4.

Due to the non-ideal nature of TEM cell and GTEM cell devices, a maximum deviation of 6 dB is allowed for 3 % of the frequencies determined in accordance with 8.2.3. For all other frequencies, the performance of the field strength shall be within 1 dB of the ideal curve given

AVA Documents Document Sharing Hub

Full document details: IEC 62132-2 2010