IEC 62153-4-8

Edition 2.0 2018-06

INTERNATIONAL STANDARD

NORME INTERNATIONALE

colour inside

Metallic cables and other passive components – Test methods – Part 4-8: Electromagnetic compatibility (EMC) – Capacitive coupling admittance

Câbles métalliques et autres composants passifs – Méthodes d'essai – Partie 4-8: Compatibilité électromagnétique (CEM) – Admittance de couplage capacitif

IEC 62153-4-8:2018-06(en-fr)

Documents
Document Sharing Hub

Full document details: IEC 62153-4-8 2018

THIS PUBLICATION IS COPYRIGHT PROTECTED
Copyright © 2018 IEC, Geneva, Switzerland

All rights reserved. Unless otherwise specified, no part of this publication may be reproduced or utilized in any form or by any means, electronic or mechanical, including photocopying and microfilm, without permission in writing from either IEC or IEC's member National Committee in the country of the requester. If you have any questions about IEC copyright or have an enquiry about obtaining additional rights to this publication, please contact the address below or your local IEC member National Committee for further information.

Droits de reproduction réservés. Sauf indication contraire, aucune partie de cette publication ne peut être reproduite ni utilisée sous quelque forme que ce soit et par aucun procédé, électronique ou mécanique, y compris la photocopie et les microfilms, sans l'accord écrit de l'IEC ou du Comité national de l'IEC du pays du demandeur. Si vous avez des questions sur le copyright de l'IEC ou si vous désirez obtenir des droits supplémentaires sur cette publication, utilisez les coordonnées ci-après ou contactez le Comité national de l'IEC de votre pays de résidence.

IEC Central Office
3, rue de Varembé
CH-1211 Geneva 20
Switzerland

Tel.: +41 22 919 02 11
info@iec.ch
www.iec.ch

About the IEC
The International Electrotechnical Commission (IEC) is the leading global organization that prepares and publishes International Standards for all electrical, electronic and related technologies.

About IEC publications
The technical content of IEC publications is kept under constant review by the IEC. Please make sure that you have the latest edition, a corrigenda or an amendment might have been published.

IEC Catalogue - webstore.iec.ch/catalogue
The stand-alone application for consulting the entire bibliographical information on IEC International Standards, Technical Specifications, Technical Reports and other documents. Available for PC, Mac OS, Android Tablets and iPad.

IEC publications search - webstore.iec.ch/advsearchform
The advanced search enables to find IEC publications by a variety of criteria (reference number, text, technical committee,…). It also gives information on projects, replaced and withdrawn publications.

IEC Just Published - webstore.iec.ch/justpublished
Stay up to date on all new IEC publications. Just Published details all new publications released. Available online and also once a month by email.

Electropedia - www.electropedia.org
The world's leading online dictionary of electronic and electrical terms containing 21 000 terms and definitions in English and French, with equivalent terms in 16 additional languages. Also known as the International Electrotechnical Vocabulary (IEV) online.

IEC Glossary - std.iec.ch/glossary
67 000 electrotechnical terminology entries in English and French extracted from the Terms and Definitions clause of IEC publications issued since 2002. Some entries have been collected from earlier publications of IEC TC 37, 77, 86 and CISPR.

IEC Customer Service Centre - webstore.iec.ch/csc
If you wish to give us your feedback on this publication or need further assistance, please contact the Customer Service Centre: sales@iec.ch.

A propos de l'IEC
La Commission Electrotechnique Internationale (IEC) est la première organisation mondiale qui élabore et publie des Normes internationales pour tout ce qui a trait à l'électricité, à l'électronique et aux technologies apparentées.

A propos des publications IEC
Le contenu technique des publications IEC est constamment revu. Veuillez vous assurer que vous possédez l'édition la plus récente, un corrigendum ou amendement peut avoir été publié.

Catalogue IEC - webstore.iec.ch/catalogue
Application autonome pour consulter tous les renseignements bibliographiques sur les Normes internationales, Spécifications techniques, Rapports techniques et autres documents de l'IEC. Disponible pour PC, Mac OS, tablettes Android et iPad.

Recherche de publications IEC - webstore.iec.ch/advsearchform

La recherche avancée permet de trouver des publications IEC en utilisant différents critères (numéro de référence, texte, comité d'études,…). Elle donne aussi des informations sur les projets et les publications remplacées ou retirées.

IEC Just Published - webstore.iec.ch/justpublished

Restez informé sur les nouvelles publications IEC. Just Published détaille les nouvelles publications parues. Disponible en ligne et aussi une fois par mois par email.

Electropedia - www.electropedia.org

Le premier dictionnaire en ligne de termes électroniques et électriques. Il contient 21 000 termes et définitions en anglais et en français, ainsi que les termes équivalents dans 16 langues additionnelles. Egalement appelé Vocabulaire Electrotechnique International (IEV) en ligne.

Glossaire IEC - std.iec.ch/glossary
67 000 entrées terminologiques électrotechniques, en anglais et en français, extraites des articles Termes et Définitions des publications IEC parues depuis 2002. Plus certaines entrées antérieures extraites des publications des CE 37, 77, 86 et CISPR de l'IEC.

Service Clients - webstore.iec.ch/csc

Si vous désirez nous donner des commentaires sur cette publication ou si vous avez des questions contactez-nous: sales@iec.ch.

Documents
Document Sharing Hub

Full document details: IEC 62153-4-8 2018

IEC 62153-4-8

Edition 2.0 2018-06

INTERNATIONAL STANDARD

NORME INTERNATIONALE

colour inside

Metallic cables and other passive components – Test methods – Part 4-8: Electromagnetic compatibility (EMC) – Capacitive coupling admittance

Câbles métalliques et autres composants passifs – Méthodes d'essai – Partie 4-8: Compatibilité électromagnétique (CEM) – Admittance de couplage capacitif

INTERNATIONAL
ELECTROTECHNICAL
COMMISSION

COMMISSION
ELECTROTECHNIQUE
INTERNATIONALE

ICS 33.100.10; 33.120.10

ISBN 978-2-8322-5805-7

Warning! Make sure that you obtained this publication from an authorized distributor.
Attention! Veuillez vous assurer que vous avez obtenu cette publication via un distributeur agréé.

AVA Documents
Document Sharing Hub

® Registered trademark of the International Electrotechnical Commission
Marque déposée de la Commission Electrotechnique Internationale

Full document details: IEC 62153-4-8 2018

CONTENTS

FOREWORD 3
1 Scope 5
2 Normative references 5
3 Terms and definitions 5
4 Principle 9
5 Test method 9
5.1 General 9
5.2 Cut-off frequency 9
5.3 Test equipment 9
5.4 Coupling length 9
5.5 Sample preparation 10
5.6 Test set-up 11
5.7 Calibration procedure 12
5.8 Measuring procedure 12
5.9 Evaluation of test results 12
5.9.1 General 12
5.9.2 Test report 13
Bibliography 14

Figure 1 – Definition of Z_T 6
Figure 2 – Definition of Z_F 7
Figure 3 – Preparation of test sample for coaxial cables 10
Figure 4 – Preparation of test sample for symmetrical cables 10
Figure 5 – Triaxial set-up 11
Figure 6 – Connection to the vector network analyzer 11

Documents
Document Sharing Hub

Full document details: IEC 62153-4-8 2018

INTERNATIONAL ELECTROTECHNICAL COMMISSION

METALLIC CABLES AND OTHER PASSIVE COMPONENTS – TEST METHODS –

Part 4-8: Electromagnetic compatibility (EMC) – Capacitive coupling admittance

FOREWORD

1) The International Electrotechnical Commission (IEC) is a worldwide organization for standardization comprising all national electrotechnical committees (IEC National Committees). The object of IEC is to promote international co-operation on all questions concerning standardization in the electrical and electronic fields. To this end and in addition to other activities, IEC publishes International Standards, Technical Specifications, Technical Reports, Publicly Available Specifications (PAS) and Guides (hereafter referred to as "IEC Publication(s)"). Their preparation is entrusted to technical committees; any IEC National Committee interested in the subject dealt with may participate in this preparatory work. International, governmental and non-governmental organizations liaising with the IEC also participate in this preparation. IEC collaborates closely with the International Organization for Standardization (ISO) in accordance with conditions determined by agreement between the two organizations.
2) The formal decisions or agreements of IEC on technical matters express, as nearly as possible, an international consensus of opinion on the relevant subjects since each technical committee has representation from all interested IEC National Committees.
3) IEC Publications have the form of recommendations for international use and are accepted by IEC National Committees in that sense. While all reasonable efforts are made to ensure that the technical content of IEC Publications is accurate, IEC cannot be held responsible for the way in which they are used or for any misinterpretation by any end user.
4) In order to promote international uniformity, IEC National Committees undertake to apply IEC Publications transparently to the maximum extent possible in their national and regional publications. Any divergence between any IEC Publication and the corresponding national or regional publication shall be clearly indicated in the latter.
5) IEC itself does not provide any attestation of conformity. Independent certification bodies provide conformity assessment services and, in some areas, access to IEC marks of conformity. IEC is not responsible for any services carried out by independent certification bodies.
6) All users should ensure that they have the latest edition of this publication.
7) No liability shall attach to IEC or its directors, employees, servants or agents including individual experts and members of its technical committees and IEC National Committees for any personal injury, property damage or other damage of any nature whatsoever, whether direct or indirect, or for costs (including legal fees) and expenses arising out of the publication, use of, or reliance upon, this IEC Publication or any other IEC Publications.
8) Attention is drawn to the Normative references cited in this publication. Use of the referenced publications is indispensable for the correct application of this publication.
9) Attention is drawn to the possibility that some of the elements of this IEC Publication may be the subject of patent rights. IEC shall not be held responsible for identifying any or all such patent rights.

International Standard IEC 62153-4-8 has been prepared by IEC technical committee 46: Cables, wires, waveguides, RF connectors, RF and microwave passive components and accessories.

This second edition cancels and replaces the first edition published in 2006. This edition constitutes a technical revision.

Future standards in this series will carry the new general title as cited above. Titles of existing standards in this series will be updated at the time of the next edition.

This edition includes the following significant technical changes with respect to the previous edition:

AVA Documents Document Sharing Hub

Full document details: IEC 62153-4-8 2018

a) use of the triaxial set-up in a similar manner as for the measurement of the transfer impedance (see IEC 62153-4-3),

b) use of vector network analyser instead of capacitance bridge or pulse generator.

The text of this International Standard is based on the following documents:

FDIS	Report on voting
46/684/FDIS	46/690/RVD

Full information on the voting for the approval of this International Standard can be found in the report on voting indicated in the above table.

This document has been drafted in accordance with the ISO/IEC Directives, Part 2.

A list of all parts of the IEC 62153 series, under the general title: *Metallic cables and other passive components – Test methods*, can be found on the IEC website.

The committee has decided that the contents of this document will remain unchanged until the stability date indicated on the IEC website under "http://webstore.iec.ch" in the data related to the specific document. At this date, the document will be

- reconfirmed,
- withdrawn,
- replaced by a revised edition, or
- amended.

IMPORTANT – The 'colour inside' logo on the cover page of this publication indicates that it contains colours which are considered to be useful for the correct understanding of its contents. Users should therefore print this document using a colour printer.

Documents
Document Sharing Hub

Full document details: IEC 62153-4-8 2018

METALLIC CABLES AND OTHER PASSIVE COMPONENTS – TEST METHODS –

Part 4-8: Electromagnetic compatibility (EMC) – Capacitive coupling admittance

1 Scope

This part of IEC 62153 specifies a test method for determining the capacitive coupling admittance, the capacitive coupling impedance and the coupling capacitance by the use of a triaxial set-up in a similar manner as for the measurement of the transfer impedance (see IEC 62153-4-3). Most cables have negligible capacitive coupling; however, in the case of cables with loose single-braids, the coupling through the holes in the screen shall be determined by the measurement of the capacitive coupling admittance.

2 Normative references

The following documents are referred to in the text in such a way that some or all of their content constitutes requirements of this document. For dated references, only the edition cited applies. For undated references, the latest edition of the referenced document (including any amendments) applies.

IEC 62153-4-3, *Metallic communication cable test methods – Part 4-3: Electromagnetic compatibility (EMC) – Surface transfer impedance – Triaxial method*

3 Terms and definitions

For the purposes of this document, the following terms and definitions apply.

ISO and IEC maintain terminological databases for use in standardization at the following addresses:

- IEC Electropedia: available at http://www.electropedia.org/
- ISO Online browsing platform: available at http://www.iso.org/obp.

3.1
inner circuit
circuit consisting of the screens and the conductor(s) of the test specimen

Note 1 to entry: Quantities relating to the inner circuit are denoted by the subscript “1”. See Figure 1 and Figure 2.

3.2
outer circuit
circuit consisting of the screen surface and the inner surface of a surrounding test jig

Note 1 to entry: Quantities relating to the outer circuit are denoted by the subscript “2”. See Figure 1 and Figure 2.

Documents
Document Sharing Hub
Full document details: IEC 62153-4-8 2018

3.3
transfer impedance
Z_T
quotient of the longitudinal voltage induced in the matched outer circuit – formed by the screen under test and the measuring jig – and the current fed into the inner circuit or vice versa (see Figure 1)

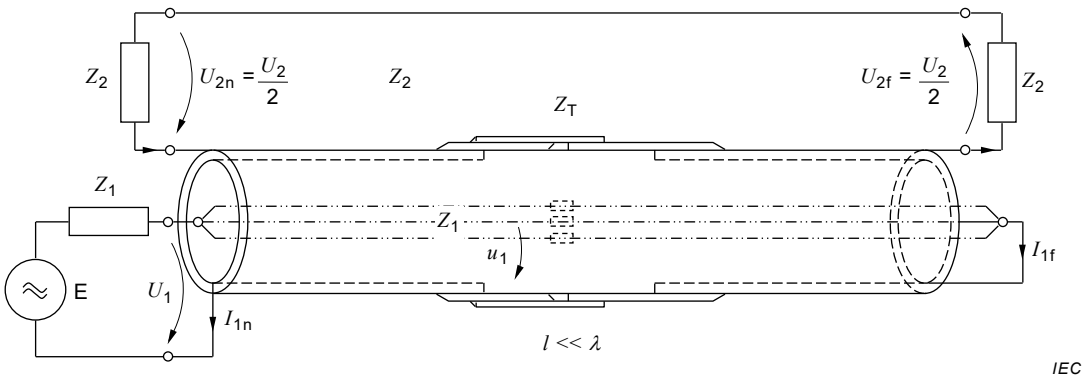

Key

Z_1, Z_2	characteristic impedance of the inner and the outer circuits
U_1, U_2	voltages in the inner and the outer circuits (n: near end, f: far end)
I_1	current in the inner circuit (n: near end, f: far end)
l	length of the cable, respectively the length of the screen under test
λ	wavelength in free space

$$Z_T = \frac{U_2}{I_1} \tag{1}$$

where

Z_T	is the transfer impedance;
U_2	is the voltage in the inner and the outer circuits (n: near end, f: far end);
I_1	is the current in the inner circuit (n: near end, f: far end).

Figure 1 – Definition of Z_T

Note 1 to entry: Transfer impedance is expressed in mΩ/m.

3.4
capacitive coupling impedance
Z_F
quotient of twice the voltage induced to the terminating impedance Z_2 of the matched outer circuit by a current I_1 fed (without returning over the screen) to the inner circuit and the current I_1 or vice versa (see Figure 2)

Documents
Document Sharing Hub
Full document details: IEC 62153-4-8 2018

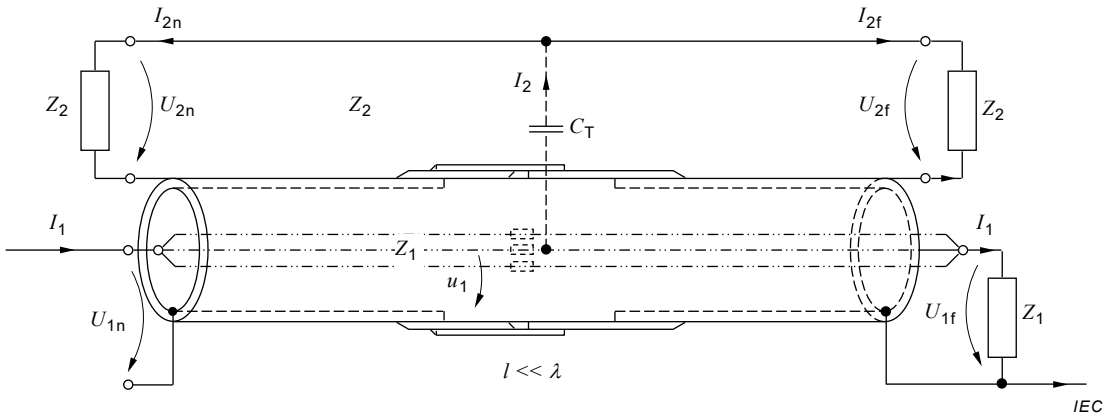

Key

Z_1, Z_2 characteristic impedance of the inner and the outer circuits

U_1, U_2 voltages in the inner and the outer circuits (n: near end, f: far end)

I_1, I_2 current in the inner and the outer circuits (n: near end, f: far end)

l length of the cable, respectively the length of the screen under test

λ wavelength in free space

$I_{2n} = I_{2f}$

$U_{1n} = U_{1f}$

$I_{2n} = I_{2f} = (1/2) \times I_2 = I_2/2$

$I_2 = I_{2n} + I_{2f}$

$$Z_F = \frac{U_{2n} + U_{2f}}{I_1} = \frac{2U_{2f}}{I_1} = Z_1 Z_2 \times j\omega C_T \tag{2}$$

where

Z_F is the capacitive coupling impedance;

Z_1, Z_2 is the characteristic impedance of the inner and the outer circuits;

U_2 is the voltage in the outer circuit (n: near end, f: far end);

I_1 is the current in the inner circuit (n: near end, f: far end);

C_T is the coupling capacitance.

Figure 2 – Definition of Z_F

Note 1 to entry: Capacitive coupling impedance is expressed in mΩ/m.

Note 2 to entry: For multiconductor cables, the inner conductors are shorted together.

Note 3 to entry: The coupling capacitance C_T is dependent on the dielectric permittivity and geometry of the outer circuit, whereas the capacitive coupling impedance is invariant with respect to the geometry of the outer circuit and nearly invariant with respect to the dielectric permittivity.

$$Z_F = Z_1 Z_2 j\omega C_T = j\omega C_T \frac{\sqrt{\varepsilon_{r1}}}{C_1 c_0} \frac{\sqrt{\varepsilon_{r2}}}{C_2 c_0} \tag{3}$$

where

Z_F is the capacitive coupling impedance;

C_T is the coupling capacitance;

ω is the circular frequency;

Documents
Document Sharing Hub
Full document details: IEC 62153-4-8 2018

c_0 is the speed of light, 3 × 10^8m/s;

ε_{r1} is the relative dielectric permittivity of the inner circuit (CUT);

ε_{r2} is the relative dielectric permittivity of the outer circuit (tube);

Z_1 is the impedance of the inner circuit (CUT);

Z_2 is the impedance of the outer circuit (tube);

C_1 is the capacitance of the inner circuit (CUT);

C_2 is the capacitance of the outer circuit (tube).

As $C_T \propto \frac{C_1 C_2}{\varepsilon_{r1} + \varepsilon_{r2}}$ one gets $Z_F \propto \frac{\sqrt{\varepsilon_{r1}\varepsilon_{r2}}}{\varepsilon_{r1} + \varepsilon_{r2}}$; and $\frac{\sqrt{\varepsilon_{r1}\varepsilon_{r2}}}{\varepsilon_{r1} + \varepsilon_{r2}} \approx 0{,}5$ for relative dielectric permittivity in the inner and outer circuit in the range from 1 to 3.

3.5
capacitive coupling admittance
$\boldsymbol{Y_C}$
quotient of the current induced in the secondary (inner) circuit to the voltage development in the primary (outer) circuit. For electrically short uniform cables

$$Y_C = j\omega C_T \tag{4}$$

3.6
effective transfer impedance
$\boldsymbol{Z_{TE}}$
maximum absolute value of the sum or difference of the Z_F and Z_T at every frequency

$$Z_{TE} = \max\left|Z_F \pm Z_T\right| \tag{5}$$

Note 1 to entry: The effective transfer impedance is expressed in Ω.

3.7
effective transfer impedance related to a reference impedance of 1 Ω
$\boldsymbol{Z_{TE}}$
maximum absolute value of the sum or difference of the Z_F and Z_T at every frequency expressed in dB (Ω)

$$Z_{TE} = +20 \times \log_{10}\left(\frac{\left|Z_{TE}\right|}{Z_{T,ref}}\right) \tag{6}$$

where

$Z_{T,ref}$ is the reference transfer impedance with a value of 1 Ω

Note 1 to entry: The effective transfer impedance is expressed in dB (Ω).

3.8
coupling length
$\boldsymbol{L_c}$
length of cable which is inside the test jig, i.e. the length of the screen under test

3.9
cut-off frequency
maximum frequency up to which the capacitive coupling admittance can be measured

Documents
Document Sharing Hub
Full document details: IEC 62153-4-8 2018