IEC 62276

Edition 3.0 2016-10

INTERNATIONAL STANDARD

Single crystal wafers for surface acoustic wave (SAW) device applications – Specifications and measuring methods

IEC 62276:2016-10(en)

Documents
Document Sharing Hub
Full document details: IEC 62276 2016

THIS PUBLICATION IS COPYRIGHT PROTECTED

Copyright © 2016 IEC, Geneva, Switzerland

All rights reserved. Unless otherwise specified, no part of this publication may be reproduced or utilized in any form or by any means, electronic or mechanical, including photocopying and microfilm, without permission in writing from either IEC or IEC's member National Committee in the country of the requester. If you have any questions about IEC copyright or have an enquiry about obtaining additional rights to this publication, please contact the address below or your local IEC member National Committee for further information.

IEC Central Office
3, rue de Varembé
CH-1211 Geneva 20
Switzerland

Tel.: +41 22 919 02 11
Fax: +41 22 919 03 00
info@iec.ch
www.iec.ch

About the IEC
The International Electrotechnical Commission (IEC) is the leading global organization that prepares and publishes International Standards for all electrical, electronic and related technologies.

About IEC publications
The technical content of IEC publications is kept under constant review by the IEC. Please make sure that you have the latest edition, a corrigenda or an amendment might have been published.

IEC Catalogue - webstore.iec.ch/catalogue
The stand-alone application for consulting the entire bibliographical information on IEC International Standards, Technical Specifications, Technical Reports and other documents. Available for PC, Mac OS, Android Tablets and iPad.

IEC publications search - www.iec.ch/searchpub
The advanced search enables to find IEC publications by a variety of criteria (reference number, text, technical committee,…). It also gives information on projects, replaced and withdrawn publications.

IEC Just Published - webstore.iec.ch/justpublished
Stay up to date on all new IEC publications. Just Published details all new publications released. Available online and also once a month by email.

Electropedia - www.electropedia.org
The world's leading online dictionary of electronic and electrical terms containing 20 000 terms and definitions in English and French, with equivalent terms in 15 additional languages. Also known as the International Electrotechnical Vocabulary (IEV) online.

IEC Glossary - std.iec.ch/glossary
65 000 electrotechnical terminology entries in English and French extracted from the Terms and Definitions clause of IEC publications issued since 2002. Some entries have been collected from earlier publications of IEC TC 37, 77, 86 and CISPR.

IEC Customer Service Centre - webstore.iec.ch/csc
If you wish to give us your feedback on this publication or need further assistance, please contact the Customer Service Centre: csc@iec.ch.

Documents
Document Sharing Hub

Full document details: IEC 62276 2016

IEC 62276

Edition 3.0 2016-10

INTERNATIONAL STANDARD

Single crystal wafers for surface acoustic wave (SAW) device applications – Specifications and measuring methods

INTERNATIONAL
ELECTROTECHNICAL
COMMISSION

ICS 31.140

ISBN 978-2-8322-3691-8

Warning! Make sure that you obtained this publication from an authorized distributor.

® Registered trademark of the International Electrotechnical Commission

Documents
Document Sharing Hub

Full document details: IEC 62276 2016

CONTENTS

FOREWORD 5
INTRODUCTION 7
1 Scope 8
2 Normative references 8
3 Terms and definitions 8
3.1 Single crystals for SAW wafer 8
3.2 Terms and definitions related to LN and LT crystals 9
3.3 Terms and definitions related to all crystals 9
3.4 Flatness 10
3.5 Definitions of appearance defects 12
3.6 Other terms and definitions 13
4 Requirements 14
4.1 Material specification 14
4.1.1 Synthetic quartz crystal 14
4.1.2 LN 15
4.1.3 LT 15
4.1.4 LBO, LGS 15
4.2 Wafer specifications 15
4.2.1 General 15
4.2.2 Diameters and tolerances 15
4.2.3 Thickness and tolerance 15
4.2.4 Orientation flat 15
4.2.5 Secondary flat 16
4.2.6 Back surface roughness 16
4.2.7 Warp 16
4.2.8 TV5 or TTV 16
4.2.9 Front (propagation) surface finish 17
4.2.10 Front surface defects 17
4.2.11 Surface orientation tolerance 18
4.2.12 Inclusions 18
4.2.13 Etch channel number and position of seed for quartz wafer 18
4.2.14 Bevel 18
4.2.15 Curie temperature and tolerance 18
4.2.16 Lattice constant 18
4.2.17 Bulk resistivity (conductivity) for reduced LN and LT 19
5 Sampling plan 19
5.1 General 19
5.2 Sampling 19
5.3 Sampling frequency 19
5.4 Inspection of whole population 19
6 Test methods 19
6.1 Diameter 19
6.2 Thickness 20
6.3 Dimension of OF 20
6.4 Orientation of OF 20
6.5 TV5 20

AVA Documents
Document Sharing Hub

6.6 Warp ... 20
6.7 TTV ... 20
6.8 Front surface defects ... 20
6.9 Inclusions ... 20
6.10 Back surface roughness ... 20
6.11 Orientation ... 20
6.12 Curie temperature ... 20
6.13 Lattice constant ... 20
6.14 Bulk resistivity ... 21
7 Identification, labelling, packaging, delivery condition ... 21
7.1 Packaging ... 21
7.2 Labelling and identification ... 21
7.3 Delivery condition ... 21
8 Measurement of Curie temperature ... 21
8.1 General ... 21
8.2 DTA method ... 21
8.3 Dielectric constant method ... 22
9 Measurement of lattice constant (Bond method) ... 23
10 Measurement of face angle by X-ray ... 24
10.1 Measurement principle ... 24
10.2 Measurement method ... 25
10.3 Measuring surface orientation of wafer ... 25
10.4 Measuring OF flat orientation ... 25
10.5 Typical wafer orientations and reference planes ... 25
11 Measurement of bulk resistivity ... 26
11.1 Resistance measurement of a wafer ... 26
11.2 Electrode ... 27
11.3 Bulk resistivity ... 27
12 Visual inspections – Front surface inspection method ... 27
Annex A (normative) Expression using Euler angle description for piezoelectric single crystals ... 29
A.1 Wafer orientation using Euler angle description ... 29
Annex B (informative) Manufacturing process for SAW wafers ... 32
B.1 Crystal growth methods ... 32
B.1.1 Czochralski growth method ... 32
B.1.2 Vertical Bridgman method ... 34
B.2 Standard mechanical wafer manufacturing ... 35
B.2.1 Process flow-chart ... 35
B.2.2 Cutting both ends and cylindrical grinding ... 36
B.2.3 Marking orientation ... 37
B.2.4 Slicing ... 37
B.2.5 Double-sided lapping ... 37
B.2.6 Bevelling (edge rounding) ... 37
B.2.7 Mirror polishing ... 37
Bibliography ... 38

Figure 1 – Wafer sketch and measurement points for TV5 determination ... 10
Figure 2 – Schematic diagram of TTV ... 11

AVA Documents
Document Sharing Hub
Full document details: IEC 62276 2016

Figure 3 – Schematic diagram of warp 11
Figure 4 – Schematic diagram of Sori 11
Figure 5 – Example of site distribution for LTV measurement 12
Figure 6 – LTV value of each site 12
Figure 7 – Schematic of a DTA system 22
Figure 8 – Schematic of a dielectric constant measurement system 22
Figure 9 – The Bond method 24
Figure 10 – Measurement method by X-ray 24
Figure 11 – Relationship between cut angle and lattice planes 25
Figure 12 – Measuring circuit 26
Figure 13 – Resistance measuring equipment 26
Figure 14 – Shape of electrode 27
Figure A.1 – Definition of Euler angles to rotate coordinate system (X, Y, Z) onto (x_1, x_2, x_3) 29
Figure A.2 – SAW wafer coordinate system 30
Figure A.3 – Relationship between the crystal axes, Euler angles, and SAW orientation for some wafer orientations 31
Figure B.1 – Czochralski crystal growth method 32
Figure B.2 – Example of non-uniformity in crystals grown from different starting melt compositions 34
Figure B.3 – Schematic of a Vertical Bridgman furnace and example of temperature distribution 35
Figure B.4 – Process flow-chart 36

Table 1 – Description of wafer orientations 14
Table 2 – Roughness, warp, TV5 and TTV specification limits 17
Table 3 – Maximum number of etch channels in seed position 18
Table 4 – Crystal planes to determine surface and OF orientations 25
Table 5 – Electrode size 27
Table A.1 – Selected SAW substrate orientations and corresponding Euler angles 30

Documents
Document Sharing Hub

Full document details: IEC 62276 2016

INTERNATIONAL ELECTROTECHNICAL COMMISSION

SINGLE CRYSTAL WAFERS FOR SURFACE ACOUSTIC WAVE (SAW) DEVICE APPLICATIONS – SPECIFICATIONS AND MEASURING METHODS

FOREWORD

1) The International Electrotechnical Commission (IEC) is a worldwide organization for standardization comprising all national electrotechnical committees (IEC National Committees). The object of IEC is to promote international co-operation on all questions concerning standardization in the electrical and electronic fields. To this end and in addition to other activities, IEC publishes International Standards, Technical Specifications, Technical Reports, Publicly Available Specifications (PAS) and Guides (hereafter referred to as "IEC Publication(s)"). Their preparation is entrusted to technical committees; any IEC National Committee interested in the subject dealt with may participate in this preparatory work. International, governmental and non-governmental organizations liaising with the IEC also participate in this preparation. IEC collaborates closely with the International Organization for Standardization (ISO) in accordance with conditions determined by agreement between the two organizations.
2) The formal decisions or agreements of IEC on technical matters express, as nearly as possible, an international consensus of opinion on the relevant subjects since each technical committee has representation from all interested IEC National Committees.
3) IEC Publications have the form of recommendations for international use and are accepted by IEC National Committees in that sense. While all reasonable efforts are made to ensure that the technical content of IEC Publications is accurate, IEC cannot be held responsible for the way in which they are used or for any misinterpretation by any end user.
4) In order to promote international uniformity, IEC National Committees undertake to apply IEC Publications transparently to the maximum extent possible in their national and regional publications. Any divergence between any IEC Publication and the corresponding national or regional publication shall be clearly indicated in the latter.
5) IEC itself does not provide any attestation of conformity. Independent certification bodies provide conformity assessment services and, in some areas, access to IEC marks of conformity. IEC is not responsible for any services carried out by independent certification bodies.
6) All users should ensure that they have the latest edition of this publication.
7) No liability shall attach to IEC or its directors, employees, servants or agents including individual experts and members of its technical committees and IEC National Committees for any personal injury, property damage or other damage of any nature whatsoever, whether direct or indirect, or for costs (including legal fees) and expenses arising out of the publication, use of, or reliance upon, this IEC Publication or any other IEC Publications.
8) Attention is drawn to the Normative references cited in this publication. Use of the referenced publications is indispensable for the correct application of this publication.
9) Attention is drawn to the possibility that some of the elements of this IEC Publication may be the subject of patent rights. IEC shall not be held responsible for identifying any or all such patent rights.

International Standard IEC 62276 has been prepared by IEC technical committee 49: Piezoelectric, dielectric and electrostatic devices and associated materials for frequency control, selection and detection.

This third edition cancels and replaces the second edition of IEC 62276 published in 2012. It constitutes a technical revision.

This edition includes the following significant technical changes with respect to the previous edition:

– Corrections of Euler angle indications in Table 1 and axis directions in Figure 3.
– Definition of "twin" is not explained clearly enough in 3.3.3. Therefore it is revised by a more detailed definition.
– Etch channels maximum number at quartz wafer of seed which do not pass through from surface to back surface are classified for three grades in 4.2.13 a). Users use seed portions of quartz wafers for devices. They request quartz wafers with less etch channels

AVA Documents
Document Sharing Hub
Full document details: IEC 62276 2016

in seeds to reduce defects of devices. The classification of etch channels in seed may prompt a rise in quartz wafer quality.

The text of this standard is based on the following documents:

CDV	Report on voting
49/1144/CDV	49/1170/RVC

Full information on the voting for the approval of this standard can be found in the report on voting indicated in the above table.

This publication has been drafted in accordance with the ISO/IEC Directives, Part 2.

The committee has decided that the contents of this publication will remain unchanged until the stability date indicated on the IEC website under "http://webstore.iec.ch" in the data related to the specific publication. At this date, the publication will be

- reconfirmed,
- withdrawn,
- replaced by a revised edition, or
- amended.

A bilingual version of this publication may be issued at a later date.

Documents
Document Sharing Hub

Full document details: IEC 62276 2016

INTRODUCTION

A variety of piezoelectric materials are used for surface acoustic wave (SAW) filter and resonator applications. Prior to an IEC meeting in 1996 in Rotterdam, wafer specifications were typically negotiated between users and suppliers. During this meeting, a proposal was announced to address wafer standardization. This standard has been prepared in order to provide industry standard technical specifications for manufacturing piezoelectric single crystal wafers to be used in surface acoustic wave devices.

Documents
Document Sharing Hub
Full document details: IEC 62276 2016

SINGLE CRYSTAL WAFERS FOR SURFACE ACOUSTIC WAVE (SAW) DEVICE APPLICATIONS – SPECIFICATIONS AND MEASURING METHODS

1 Scope

This document applies to the manufacture of synthetic quartz, lithium niobate (LN), lithium tantalate (LT), lithium tetraborate (LBO), and lanthanum gallium silicate (LGS) single crystal wafers intended for use as substrates in the manufacture of surface acoustic wave (SAW) filters and resonators.

2 Normative references

The following documents are referred to in the text in such a way that some or all of their content constitutes requirements of this document. For dated references, only the edition cited applies. For undated references, the latest edition of the referenced document (including any amendments) applies.

IEC 60758:2016, *Synthetic quartz crystal – Specifications and guidelines for use*

ISO 2859-1: 1999, *Sampling procedures for inspection by attributes – Part 1: Sampling schemes indexed by acceptance quality limit (AQL) for lot-by-lot inspection*

3 Terms and definitions

For the purposes of this document, the following terms and definitions apply.

ISO and IEC maintain terminological databases for use in standardization at the following addresses:

- IEC Electropedia: available at http://www.electropedia.org/
- ISO Online browsing platform: available at http://www.iso.org/obp

3.1 Single crystals for SAW wafer

3.1.1
as-grown synthetic quartz crystal
right-handed or left-handed single crystal quartz grown hydrothermally

Note 1 to entry: The term “as-grown” indicates a state prior to mechanical fabrication.

Note 2 to entry: See IEC 60758 for further information concerning crystalline quartz.

3.1.2
lithium niobate
LN
single crystals approximately described by chemical formula $LiNbO_3$, grown by Czochralski (crystal pulling from melt) or other growing methods

3.1.3
lithium tantalate
LT
single crystals approximately described by chemical formula $LiTaO_3$, grown by Czochralski (crystal pulling from melt) or other growing methods

AVA Documents Document Sharing Hub

Full document details: IEC 62276 2016

3.1.4
lithium tetraborate
LBO
single crystals described by the chemical formula to $Li_2B_4O_7$, grown by Czochralski (crystal pulling from melt), vertical Bridgman, or other growing methods

3.1.5
lanthanum gallium silicate
LGS
single crystals described by the chemical formula to $La_3Ga_5SiO_{14}$, grown by Czochralski (crystal pulling from melt) or other growing methods

3.2 Terms and definitions related to LN and LT crystals

3.2.1
Curie temperature
T_c
phase transition temperature between ferroelectric and paraelectric phases measured by differential thermal analysis (DTA) or dielectric measurement

3.2.2
single domain
ferroelectric crystal with uniform electrical polarization throughout (for LN and LT)

3.2.3
polarization process
electrical process used to establish a single domain crystal

Note 1 to entry: The polarization process is also referred to as “poling”.

3.2.4
reduction process
REDOX reaction to increase conductivity to reduce the harmful effects of pyroelectricity

3.2.5
reduced LN
LN treated with a reduction process

Note 1 to entry: Reduced LN is sometimes referred to as “black LN”.

3.2.6
reduced LT
LT treated with a reduction process

Note 1 to entry: Reduced LT is sometimes referred to as “black LT”.

3.3 Terms and definitions related to all crystals

3.3.1
lattice constant
length of unit cell along a major crystallographic axis measured by X-ray using the Bond method

3.3.2
congruent composition
chemical composition of a single crystal in a thermodynamic equilibrium with a molten solution of the same composition during the growth process

Documents
Document Sharing Hub
Full document details: IEC 62276 2016

3.3.3
twin
two or more same single crystals which are combined together by the law of symmetrical plane or axis

Note 1 to entry: Twins exhibit symmetry that may be classified as reflection across a mirror plane (twin plane), rotation around an axis (twin axis), or inversion through a point (twin center).

Note 2 to entry: Optical twins（growth twins） and electrical twins（transformation twins） are the most relevant to SAW wafers. Optical twins arise from defects related to growth. Electrical twins may result from extreme conditions (temperature and pressure, for example) during processing.

3.4 Flatness

3.4.1
fixed quality area
FQA
central area of a wafer surface, defined by a nominal edge exclusion, X, over which the specified values of a parameter apply

Note 1 to entry: The boundary of the FQA is at all points (e.g. along wafer flats) the distance X away from the perimeter of the wafer of nominal dimensions.

3.4.2
reference plane
plane depending on the flatness measurement and which can be any of the following:

a) for clamped measurements, the flat chuck surface that contacts the back surface of the wafer;
b) for without clamped measurememts, three points at specified locations on the front surface within the FQA;

   for without clamped measurememts, the least-squares fit to the front surface using all measured points within the FQA;

3.4.3
site
square area on the front surface of the wafer with one side parallel to the OF

Note 1 to entry: Flatness parameters are assessed either globally for the FQA, or for each site individually.

3.4.4
thickness variation for five points
TV5
measure of wafer thickness variation defined as the maximum difference between five thickness measurements

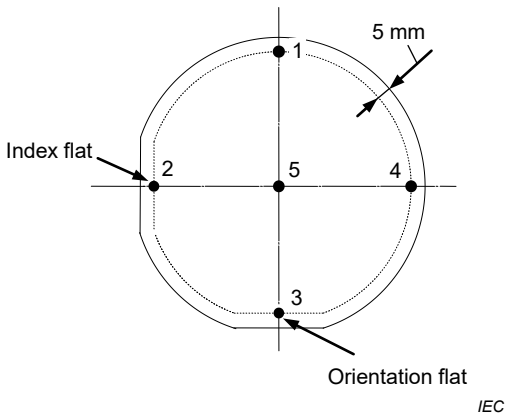

Figure 1 – Wafer sketch and measurement points for TV5 determination

AVA Documents
Document Sharing Hub
Full document details: IEC 62276 2016

Note 1 to entry: Thickness is measured at the centre of the wafer and at four peripheral points shown in Figure 1.

3.4.5
total thickness variation
TTV
difference between the maximum thickness and the minimum thickness

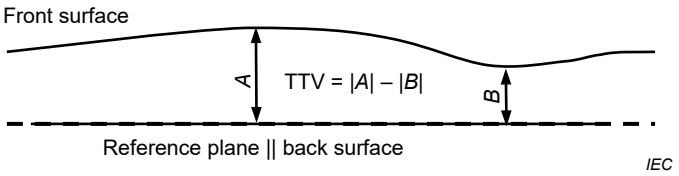

Figure 2 – Schematic diagram of TTV

Note 1 to entry: The maximum thickness is represented by the letter A and the minimum thickness is represented by the letter B in Figure 2.

Note 2 to entry: Measurement of TTV is performed under clamped conditions with the reference plane as defined in 3.4.2 a).

3.4.6
warp
maximum difference between a point on the front surface and a reference plane

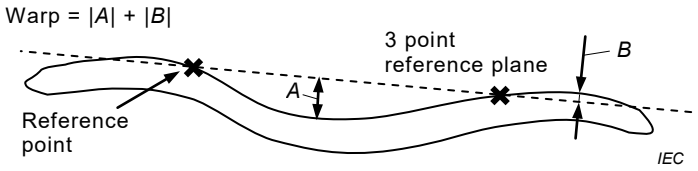

Figure 3 – Schematic diagram of warp

Note 1 to entry: Warp (shown in Figure 3) describes the deformation of an unclamped wafer.

Note 2 to entry: The reference plane is defined by 3-points as described in 3.4.2 b). Warp is a bulk property of a wafer and not of the exposed surface alone.

3.4.7
Sori
maximum difference between a point on the front surface and a reference plane

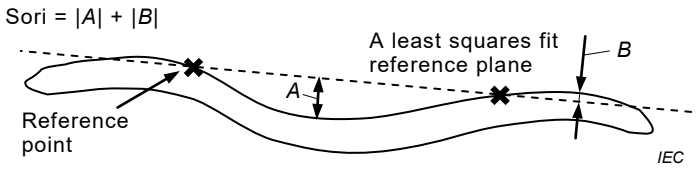

Figure 4 – Schematic diagram of Sori

Note 1 to entry: Sori describes the deformation of an unclamped wafer, as shown in Figure 4.

Note 2 to entry: In contrast to warp, in this case the reference plane is defined by a least-squares fit to the front surface (3.4.2 c)).

3.4.8
local thickness variation
LTV
variation determined by a measurement of a matrix of sites with defined edge dimensions

Documents
Document Sharing Hub
Full document details: IEC 62276 2016

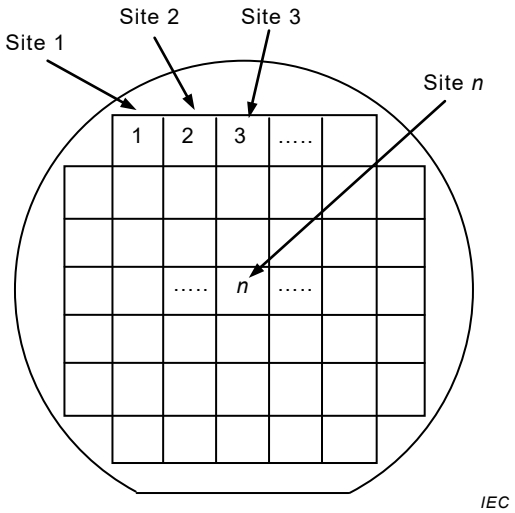

Note 1 to entry: All sites have their centres within the FQA.

Figure 5 – Example of site distribution for LTV measurement

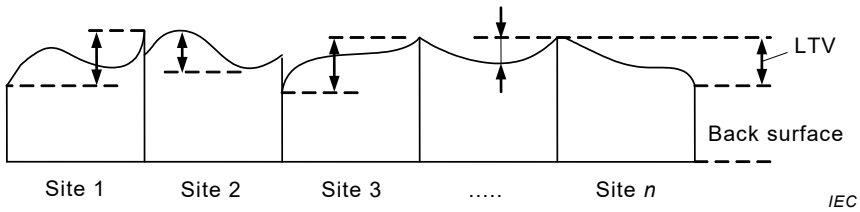

Figure 6 – LTV value of each site

Note 2 to entry: Measurement is performed on a clamped wafer with the reference plane as defined in 3.4.2 a). A site map example is shown in Figure 5. The value is always a positive number and is defined for each site as the difference between the highest and lowest points within each site, as shown in Figure 6. For a wafer to meet an LTV specification, all sites shall have LTV values less than the specified value.

3.4.9
percent local thickness variation
PLTV
percentage of sites that fall within the specified values for LTV

Note 1 to entry: As with the LTV measurement, this is a clamped measurement.

3.4.10
focal plane deviation
FPD
deviation measured relative to the 3-point reference plane

Note 1 to entry: The 3-point reference plane is defined in 3.4.2 b).

Note 2 to entry: The value obtained indicates the maximum distance between a point on the wafer surface (within the FQA) and the focal plane. If that point is above the reference, the FPD is positive. If that point is below the reference plane, the FPD is negative.

3.5 Definitions of appearance defects

3.5.1
contamination
foreign matter on a surface of wafer which cannot be removed after cleaning

Documents
Document Sharing Hub
Full document details: IEC 62276 2016