IEC 62343-5-2

Edition 1.0 2018-01

INTERNATIONAL STANDARD

NORME INTERNATIONALE

colour inside

Dynamic modules –
Part 5-2: Test methods – 1 x N fixed-grid WSS – Dynamic crosstalk measurement

Modules dynamiques –
Partie 5-2: Méthodes d'essai – Commutateurs sélectifs en longueur d'onde à grille fixe 1 x N – Mesure de diaphonie dynamique

IEC 62343-5-2:2018-01(en-fr)

Documents
Document Sharing Hub

Full document details: IEC 62343-5-2 2018

THIS PUBLICATION IS COPYRIGHT PROTECTED

Copyright © 2018 IEC, Geneva, Switzerland

All rights reserved. Unless otherwise specified, no part of this publication may be reproduced or utilized in any form or by any means, electronic or mechanical, including photocopying and microfilm, without permission in writing from either IEC or IEC's member National Committee in the country of the requester. If you have any questions about IEC copyright or have an enquiry about obtaining additional rights to this publication, please contact the address below or your local IEC member National Committee for further information.

Droits de reproduction réservés. Sauf indication contraire, aucune partie de cette publication ne peut être reproduite ni utilisée sous quelque forme que ce soit et par aucun procédé, électronique ou mécanique, y compris la photocopie et les microfilms, sans l'accord écrit de l'IEC ou du Comité national de l'IEC du pays du demandeur. Si vous avez des questions sur le copyright de l'IEC ou si vous désirez obtenir des droits supplémentaires sur cette publication, utilisez les coordonnées ci-après ou contactez le Comité national de l'IEC de votre pays de résidence.

IEC Central Office
3, rue de Varembé
CH-1211 Geneva 20
Switzerland

Tel.: +41 22 919 02 11
info@iec.ch
www.iec.ch

About the IEC
The International Electrotechnical Commission (IEC) is the leading global organization that prepares and publishes International Standards for all electrical, electronic and related technologies.

About IEC publications
The technical content of IEC publications is kept under constant review by the IEC. Please make sure that you have the latest edition, a corrigenda or an amendment might have been published.

IEC Catalogue - webstore.iec.ch/catalogue
The stand-alone application for consulting the entire bibliographical information on IEC International Standards, Technical Specifications, Technical Reports and other documents. Available for PC, Mac OS, Android Tablets and iPad.

IEC publications search - webstore.iec.ch/advsearchform
The advanced search enables to find IEC publications by a variety of criteria (reference number, text, technical committee,…). It also gives information on projects, replaced and withdrawn publications.

IEC Just Published - webstore.iec.ch/justpublished
Stay up to date on all new IEC publications. Just Published details all new publications released. Available online and also once a month by email.

Electropedia - www.electropedia.org
The world's leading online dictionary of electronic and electrical terms containing 21 000 terms and definitions in English and French, with equivalent terms in 16 additional languages. Also known as the International Electrotechnical Vocabulary (IEV) online.

IEC Glossary - std.iec.ch/glossary
67 000 electrotechnical terminology entries in English and French extracted from the Terms and Definitions clause of IEC publications issued since 2002. Some entries have been collected from earlier publications of IEC TC 37, 77, 86 and CISPR.

IEC Customer Service Centre - webstore.iec.ch/csc
If you wish to give us your feedback on this publication or need further assistance, please contact the Customer Service Centre: sales@iec.ch.

A propos de l'IEC
La Commission Electrotechnique Internationale (IEC) est la première organisation mondiale qui élabore et publie des Normes internationales pour tout ce qui a trait à l'électricité, à l'électronique et aux technologies apparentées.

A propos des publications IEC
Le contenu technique des publications IEC est constamment revu. Veuillez vous assurer que vous possédez l'édition la plus récente, un corrigendum ou amendement peut avoir été publié.

Catalogue IEC - webstore.iec.ch/catalogue
Application autonome pour consulter tous les renseignements bibliographiques sur les Normes internationales, Spécifications techniques, Rapports techniques et autres documents de l'IEC. Disponible pour PC, Mac OS, tablettes Android et iPad.

Recherche de publications IEC - webstore.iec.ch/advsearchform

La recherche avancée permet de trouver des publications IEC en utilisant différents critères (numéro de référence, texte, comité d'études,…). Elle donne aussi des informations sur les projets et les publications remplacées ou retirées.

IEC Just Published - webstore.iec.ch/justpublished

Restez informé sur les nouvelles publications IEC. Just Published détaille les nouvelles publications parues. Disponible en ligne et aussi une fois par mois par email.

Electropedia - www.electropedia.org

Le premier dictionnaire en ligne de termes électroniques et électriques. Il contient 21 000 termes et définitions en anglais et en français, ainsi que les termes équivalents dans 16 langues additionnelles. Egalement appelé Vocabulaire Electrotechnique International (IEV) en ligne.

Glossaire IEC - std.iec.ch/glossary
67 000 entrées terminologiques électrotechniques, en anglais et en français, extraites des articles Termes et Définitions des publications IEC parues depuis 2002. Plus certaines entrées antérieures extraites des publications des CE 37, 77, 86 et CISPR de l'IEC.

Service Clients - webstore.iec.ch/csc

Si vous désirez nous donner des commentaires sur cette publication ou si vous avez des questions contactez-nous: sales@iec.ch.

Documents
Document Sharing Hub

Full document details: IEC 62343-5-2 2018

IEC 62343-5-2

Edition 1.0 2018-01

INTERNATIONAL STANDARD

NORME INTERNATIONALE

colour inside

Dynamic modules –
Part 5-2: Test methods – 1 x N fixed-grid WSS – Dynamic crosstalk measurement

Modules dynamiques –
Partie 5-2: Méthodes d'essai – Commutateurs sélectifs en longueur d'onde à grille fixe 1 x N – Mesure de diaphonie dynamique

INTERNATIONAL
ELECTROTECHNICAL
COMMISSION

COMMISSION
ELECTROTECHNIQUE
INTERNATIONALE

ICS 33.180.01 33.180.99

ISBN 978-2-8322-5267-3

Warning! Make sure that you obtained this publication from an authorized distributor.
Attention! Veuillez vous assurer que vous avez obtenu cette publication via un distributeur agréé.

AVA Documents
Document Sharing Hub

® Registered trademark of the International Electrotechnical Commission
Marque déposée de la Commission Electrotechnique Internationale

Full document details: IEC 62343-5-2 2018

CONTENTS

FOREWORD ... 3
INTRODUCTION ... 5
1 Scope ... 6
2 Normative references ... 6
3 Terms, definitions and abbreviated terms ... 6
3.1 Basic terms ... 6
3.2 Performance parameter terms ... 8
3.3 Abbreviated terms ... 9
4 Apparatus ... 10
4.1 Test set-up ... 10
4.2 Light source ... 10
4.2.1 Tuneable laser source (TLS) ... 10
4.2.2 Broadband light source and tuneable filter ... 11
4.3 Device under test ... 11
4.4 Detector ... 12
4.4.1 Optical power meter (OPM) ... 12
4.4.2 OE converter and oscilloscope ... 12
5 Measurement condition ... 13
5.1 General conditions ... 13
5.2 Recommendations on selections of a branching port and channel ... 13
6 Procedure ... 13
6.1 Preparation ... 13
6.2 Measurement ... 14
6.2.1 Measurement of input power and insertion loss of DUT ... 14
6.2.2 Measurement of noise power for dynamic crosstalk ... 14
6.2.3 Measurement of noise power for different channel crosstalk ... 14
6.2.4 Measurement of noise power for same channel crosstalk ... 14
7 Example of transient characteristics of noise power ... 15
8 Calculation ... 17
9 Measurement report ... 19
Bibliography ... 21

Figure 1 – Noise observed in port during conducting port switching in 1 x N WSS ... 9
Figure 2 – Test set-up to measure dynamic crosstalk ... 10
Figure 3 – Transient characteristics for measurement of different channel dynamic crosstalk ... 16
Figure 4 – Transient characteristics for measurement of same channel dynamic crosstalk ... 17

Table 1 – Example of template for measurement results for different channel dynamic crosstalk ... 19
Table 2 – Example of summary of crosstalk measurement ... 20

Documents
Document Sharing Hub
Full document details: IEC 62343-5-2 2018

INTERNATIONAL ELECTROTECHNICAL COMMISSION

DYNAMIC MODULES –

Part 5-2: Test methods – 1 x *N* fixed-grid WSS – Dynamic crosstalk measurement

FOREWORD

1) The International Electrotechnical Commission (IEC) is a worldwide organization for standardization comprising all national electrotechnical committees (IEC National Committees). The object of IEC is to promote international co-operation on all questions concerning standardization in the electrical and electronic fields. To this end and in addition to other activities, IEC publishes International Standards, Technical Specifications, Technical Reports, Publicly Available Specifications (PAS) and Guides (hereafter referred to as "IEC Publication(s)"). Their preparation is entrusted to technical committees; any IEC National Committee interested in the subject dealt with may participate in this preparatory work. International, governmental and non-governmental organizations liaising with the IEC also participate in this preparation. IEC collaborates closely with the International Organization for Standardization (ISO) in accordance with conditions determined by agreement between the two organizations.
2) The formal decisions or agreements of IEC on technical matters express, as nearly as possible, an international consensus of opinion on the relevant subjects since each technical committee has representation from all interested IEC National Committees.
3) IEC Publications have the form of recommendations for international use and are accepted by IEC National Committees in that sense. While all reasonable efforts are made to ensure that the technical content of IEC Publications is accurate, IEC cannot be held responsible for the way in which they are used or for any misinterpretation by any end user.
4) In order to promote international uniformity, IEC National Committees undertake to apply IEC Publications transparently to the maximum extent possible in their national and regional publications. Any divergence between any IEC Publication and the corresponding national or regional publication shall be clearly indicated in the latter.
5) IEC itself does not provide any attestation of conformity. Independent certification bodies provide conformity assessment services and, in some areas, access to IEC marks of conformity. IEC is not responsible for any services carried out by independent certification bodies.
6) All users should ensure that they have the latest edition of this publication.
7) No liability shall attach to IEC or its directors, employees, servants or agents including individual experts and members of its technical committees and IEC National Committees for any personal injury, property damage or other damage of any nature whatsoever, whether direct or indirect, or for costs (including legal fees) and expenses arising out of the publication, use of, or reliance upon, this IEC Publication or any other IEC Publications.
8) Attention is drawn to the Normative references cited in this publication. Use of the referenced publications is indispensable for the correct application of this publication.
9) Attention is drawn to the possibility that some of the elements of this IEC Publication may be the subject of patent rights. IEC shall not be held responsible for identifying any or all such patent rights.

International Standard IEC 62343-5-2 has been prepared by subcommittee 86C: Fibre optic systems and active devices, of IEC technical committee 86: Fibre optics.

The text of this International Standard is based on the following documents:

CDV	Report on voting
86C/1449/CDV	86C/1480/RVC

Full information on the voting for the approval of this International Standard can be found in the report on voting indicated in the above table.

This document has been drafted in accordance with the ISO/IEC Directives, Part 2.

A list of all parts in the IEC 62343 series, published under the general title *Dynamic modules*, can be found on the IEC website.

AVA Documents
Document Sharing Hub

The committee has decided that the contents of this document will remain unchanged until the stability date indicated on the IEC website under "http://webstore.iec.ch" in the data related to the specific document. At this date, the document will be

- reconfirmed,
- withdrawn,
- replaced by a revised edition, or
- amended.

IMPORTANT – The 'colour inside' logo on the cover page of this publication indicates that it contains colours which are considered to be useful for the correct understanding of its contents. Users should therefore print this document using a colour printer.

Documents
Document Sharing Hub

Full document details: IEC 62343-5-2 2018

INTRODUCTION

Dynamic crosstalk is attributed to both channel crosstalk (due to same wavelength and/or other wavelengths) and port isolation. It is predicted to change during port switching operations and is a significant performance issue studied and summarized in IEC TR 62343-6-9 for 1 x N ($N \geq 3$) wavelength selective switches (WSSs).

It was revealed that dynamic crosstalk exists in actual 1 x N ($N \geq 3$) WSSs in IEC TR 62343-6-9 and predicted that it would influence transmission properties to some extent when a specific channel passes through the WSS.

This document standardizes the measurement method of dynamic crosstalk of 1 x N ($N \geq 3$) WSSs.

This document is based on OITDA DM 01 from the Optoelectronic Industry and Technology Development Association (OITDA).

Documents
Document Sharing Hub

Full document details: IEC 62343-5-2 2018

DYNAMIC MODULES –

Part 5-2: Test methods – 1 x N fixed-grid WSS – Dynamic crosstalk measurement

1 Scope

This part of IEC 62343 describes the measurement methods of dynamic crosstalk during port switching for 1 x N fixed-grid wavelength selective switches (WSSs).

The objective of this document is to establish a standard test method for different-channel dynamic crosstalk and same-channel dynamic crosstalk that occur when a particular optical channel signal is switched to the specific branching port against a common port in ITU-T 50 GHz and 100 GHz fixed grid 1 x N ($N \geq 3$) WSSs.

2 Normative references

The following documents are referred to in the text in such a way that some or all of their content constitutes requirements of this document. For dated references, only the edition cited applies. For undated references, the latest edition of the referenced document (including any amendments) applies.

IEC 61300-3-29, *Fibre optic interconnecting devices and passive components – Basic test and measurement procedures – Part 3-29: Examinations and measurements – Spectral transfer characteristics of DWDM devices*

IEC TR 61931, *Fibre optic – Terminology*

IEC 62343, *Dynamic modules – General and guidance*

IEC TS 62538, *Categorization of optical devices*

ISO/IEC Guide 99, *International vocabulary of metrology – Basic and general concepts and associated terms (VIM)*

3 Terms, definitions and abbreviated terms

For the purposes of this document, the terms and definitions given in IEC TR 61931, IEC 62343, IEC TS 62538, ISO/IEC Guide 99, and the following apply.

ISO and IEC maintain terminological databases for use in standardization at the following addresses:

- IEC Electropedia: available at http://www.electropedia.org/
- ISO Online browsing platform: available at http://www.iso.org/obp

3.1 Basic terms

3.1.1
fixed grid
grid where the frequency of channel spacings of WSSs having a port configuration of 1 x N ($N \geq 2$) is predetermined for all channels and not variable

AVA Documents
Document Sharing Hub

Full document details: IEC 62343-5-2 2018

3.1.2
port pair
combination of one input port and one arbitrary output port among N ports, as for a WSS having a port configuration of 1 x N ($N \geq 2$)

Note 1 to entry: It is also valid when the WSS is used as an N x 1 port configuration. In this case, the port pair is defined as a combination of one arbitrary input port among N ports and one output port, as for the WSS having a port configuration of N x 1 ($N \geq 2$).

3.1.3
conducting port pair
two ports, i and j, between which transfer coefficient, t_{ij}, which is defined in IEC TS 62627-09, is nominally greater than zero

Note 1 to entry: The conducting port pair is defined at a specific switching state and a specified wavelength.

3.1.4
isolated port pair
two ports, i and j, between which transfer coefficient, t_{ij}, which is defined in IEC TS 62627-09, is nominally zero, and logarithmic transfer coefficient, a_{ij}, which is defined in IEC TS 62627-09, is nominally infinite

Note 1 to entry: The isolated port pair is defined at a specific switching state and a specified wavelength.

3.1.5
attenuating port pair
two ports, i and j, between which transfer coefficient, t_{ij}, which is defined in IEC TS 62627-09, is nominally greater than zero and smaller than the insertion loss

Note 1 to entry: The attenuating port pair is defined at a specific switching state and a specified wavelength.

3.1.6
conducting channel
channel intended to be conducted at the specific conducting port pair

3.1.7
isolated channel
channel intended to be isolated at the specific conducting port pair

3.1.8
common port
port for the "1" side, not for the "N" side, with a WSS having a port configuration of 1 x N ($N \geq 2$)

3.1.9
branching port
port for the "N" side, not for the "1" side, with a WSS having a port configuration of 1 x N ($N \geq 2$)

3.1.10
static state
state when the conducting port pair, isolated port pair and attenuating port pair are not under switching and/or attenuating operation, and the optical power is kept within 10 % in linear scale at any intended conduction port pair

3.1.11
dynamic state
state when at least one conducting port pair, isolated port pair or attenuating port pair is under switching and/or attenuating operation, and the optical power varies more than 10 % in linear scale at a specific intended conduction port pair in this state

Documents
Document Sharing Hub
Full document details: IEC 62343-5-2 2018

3.2 Performance parameter terms

3.2.1
crosstalk
ratio of the transfer coefficient of the power to be isolated to the transfer coefficient for the power to be conducted for an output port

Note 1 to entry: Crosstalk is generally a negative value expressed in dB.

Note 2 to entry: For fibre optic filters and WDM devices, crosstalk is defined for one port pair at two or more different wavelengths (channels).

Note 3 to entry: For fibre optic switches, crosstalk is defined for two or more port pairs at one wavelength.

Note 4 to entry: Crosstalk for a passive optical device (component) is generally the maximum value of crosstalks for all port pairs defining crosstalks.

Note 5 to entry: For WSSs, crosstalk is defined for two or more port pairs at two or more different wavelengths (channels).

[SOURCE: IEC TS 62627-09:2016, 3.4.10, modified — Note 5 has been added.]

3.2.2
static crosstalk
crosstalk in a static state for a 1 x N ($N \geq 2$) WSS, specified by the unintended signal transmission ratio divided by the intended signal transmission ratio

Note 1 to entry: Static crosstalk is generally a negative value expressed in dB.

Note 2 to entry: Two types of static crosstalk are defined: different channel static crosstalk and same channel static crosstalk.

3.2.3
different channel static crosstalk
static crosstalk, specified by the ratio of the isolated channel power divided by the conducting channel power in the same conducting port pair, when the input channel power in the isolated channel and conducting channel is the same

Note 1 to entry: Different channel static crosstalk is generally a negative value expressed in dB.

3.2.4
same channel static crosstalk
static crosstalk, specified by the ratio of the channel power in the isolated port pair divided by the channel power in the conducting port pair, when the input channel power in the isolated port pair and the conducting port pair are the same

Note 1 to entry: Same channel static crosstalk is generally a negative value expressed in dB.

3.2.5
dynamic crosstalk
transient crosstalk
crosstalk attributed to both channel crosstalk (due to the same wavelength and/or other wavelengths) and port isolation, predicted to change during the switching operation in the WSS module

Note 1 to entry: Dynamic crosstalk is generally a negative value expressed in dB.

Note 2 to entry: Two types of dynamic crosstalk are defined: different channel dynamic crosstalk and same channel dynamic crosstalk.

Note 3 to entry: Dynamic crosstalk is applied to 1 x N ($N \geq 3$) WSSs.

[SOURCE: IEC 62343-3-3:2014, 3.15, modified — The term "dynamic crosstalk" has been added as a first preferred term, and the note to entry has been replaced by three new notes.]

AVA Documents
Document Sharing Hub
Full document details: IEC 62343-5-2 2018

3.2.6
different channel dynamic crosstalk
optical power ratio of the isolated channel power divided by the conducting channel power in the selected output port, when the input power of the conducting channel and the isolated channel are the same

Note 1 to entry: Different channel dynamic crosstalk is generally a negative value expressed in dB.

Note 2 to entry: Signal leakage of the blue isolated channel in port 2 is the noise component for the red conducting channel signal in port 2 for the demultiplexing WSSs shown in Figure 1 a).

Note 3 to entry: Different channel dynamic crosstalk is applied to 1 x N ($N \geq 3$) WSSs.

3.2.7
same channel dynamic crosstalk
optical power ratio of the isolated channel power in the isolated port pair divided by the conducting channel power in the conducting port pair, when the channel power in the input port of the conducting port pair and the channel power in the input port of the isolated port pair are the same

Note 1 to entry: Same channel dynamic crosstalk is applied to 1 x N ($N \geq 3$) WSSs.

Note 2 to entry: Same channel dynamic crosstalk is generally a negative value expressed in dB.

Note 3 to entry: Red coloured signals in ports 1 and N are the noise components for the red signal in port 2, when the conducting port pair for the blue signal is switched from port 1 to N in the multiplexing WSS shown in Figure 1 b). All red signals in the isolated port pairs will be noise components. However, same channel dynamic crosstalk is defined by the ratio of the optical loss between the conducting port pair and an isolated port pair.

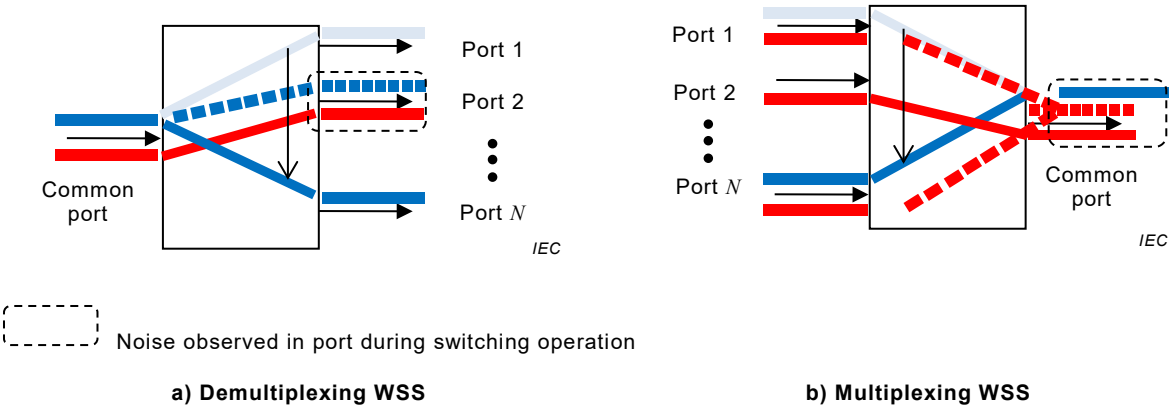

Figure 1 – Noise observed in port during conducting port switching in 1 x N WSS

3.3 Abbreviated terms

ASE amplified spontaneous emission
DLP digital light processor
ITU-T International Telecommunication Union, Telecommunication Standardization Sector
LC liquid crystal
LCOS liquid crystal on silicon
LED light emitting diode
MEMS micro-electro-mechanical system
OE optical-to-electrical
OPM optical power meter
RBD reference branching device
TJ temporary joint
TLS tuneable laser source
WSS wavelength selective switch

Documents
Document Sharing Hub
Full document details: IEC 62343-5-2 2018

4 Apparatus

4.1 Test set-up

The test set-up consists of a light source, i.e. tuneable laser source (TLS) or broadband light source, detector, i.e. optical power meter (OPM) or OE converter, and other equipment. An example of the measurement set-up for measurement of the noise power to obtain the dynamic crosstalk is given in Figure 2. The light of wavelength λ is input into the common port of the WSS as a device under test (DUT) using TLS. Optical power, which is output from all branching ports 1 to N, is measured simultaneously and continuously with a multi-port OPM connected to each branching port. All apparatus are connected by the temporary joint (TJ). If necessary, the wavelength meter with a reference branching device (RBD) may be used. Power variation during switching of the the conducting port of the WSS is measured with the OPM and recorded.

Figure 1 shows noise power that influences the different channel dynamic crosstalk is generated in the case where the WSS is used as a demultiplexer, and noise power that influences the same channel crosstalk is generated in the case where the WSS is used as a multiplexer. However, optical noise power to measure both dynamic crosstalks is measured with the test set-up shown in Figure 2, because the WSS is bidirectional.

In this test set-up, not only optical noise power in dynamic state but also optical noise power in static state before and after switching the conducting port can be measured.

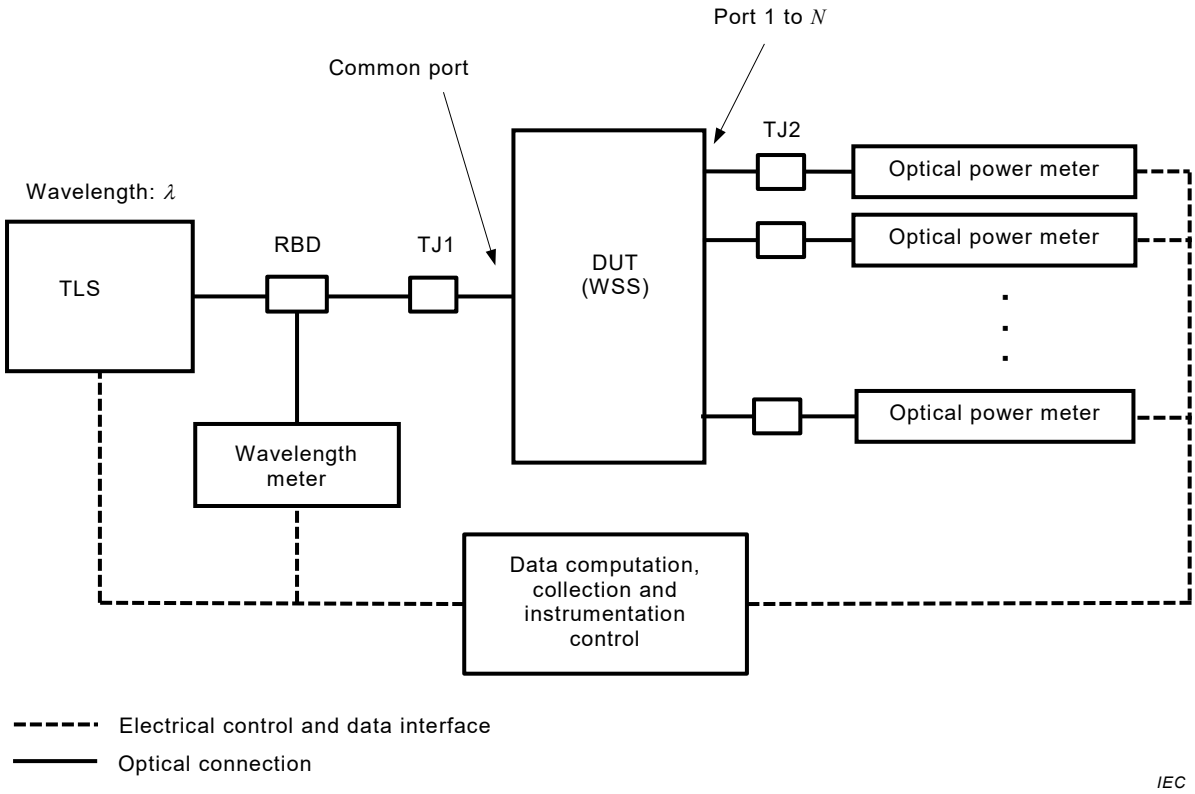

Figure 2 – Test set-up to measure dynamic crosstalk

4.2 Light source

4.2.1 Tuneable laser source (TLS)

The wavelength range of the TLS should be wider than the signal wavelength range of the DUT. Optical output of the TLS should be more than 10 dB higher than the sum of the minimum sensitivity of the optical detector, insertion loss of the test set-up [reference branching device (RBD) and temporary joints (TJs)], insertion loss of the DUT and the absolute value of measured dynamic crosstalk.

AVA Documents
Document Sharing Hub
Full document details: IEC 62343-5-2 2018

The side mode suppression ratio and signal to total source spontaneous emission ratio of the TLS should be more than 10 dB higher than the absolute value of measured dynamic crosstalk. For example, when the expected minimum value of dynamic crosstalk on the DUT is –40 dB, the signal to total source spontaneous emission of the TLS should be more than 50 dB. When the signal to total source spontaneous emission ratio of the TLS is insufficient, an appropriate tracking filter should be placed behind the TLS.

In the case of an ITU-T 50 GHz and 100 GHz fixed grid, the wavelength accuracy of the TLS should be within ±10 pm and ±20 pm, respectively. When the wavelength accuracy is insufficient, the output wavelength should be monitored by a wavelength meter and calibrated when necessary.

The spectral width of the TLS should be narrow enough for the pass band of the WSS. Less than 10 % of pass band is desirable.

In order to remove the influence of polarization dependent loss of the WSS, a polarization scrambler shall be placed after the TLS. The polarization scrambler shall have a speed fast enough (more than 10 times is desirable) than the averaging time of the detector.

4.2.2 Broadband light source and tuneable filter

A substitute system for the TLS is a test set-up that combines a broadband light source and tuneable filter.

The broadband light source should be an LED or light source that is depolarized and has a wide ASE spectrum. The spectrum of the light source should be wider than the signal wavelength range of the DUT.

A tuneable filter is used to set the wavelength to be measured. The wavelength range of the tuneable filter should be wider than the operating wavelength range of the DUT.

The accuracy of the centre wavelength of the tuneable filter should be within ±10 pm. The tuneable filter has a pass band that is narrow enough compared to that of the WSS (less than 10 % of the pass band is desirable) and wavelength isolation of more than 50 dB between the pass band and the stop band.

The optical output power generated by combining the broadband light source and tuneable filter should be more than 10 dB higher than the sum of the minimum sensitivity of the optical detector, insertion loss of the test set-up (RBD and TJs), insertion loss of the DUT and absolute value of the measured dynamic crosstalk.

4.3 Device under test

The driving engine of the WSS is one of the following:

- one dimensional arrayed MEMS mirror that uses MEMS technology;
- two dimensional arrayed MEMS mirrors that use a digital light processor (DLP);
- one dimensional arrayed LC element that uses LC technology;
- two dimensional arrayed LCOS element;
- hybrid technology combining MEMS and LC.

There are two types of WSS: one that provides an electronic switching signal and the other which does not. In the former case, the switching signal can be used as a synchronizing (trigger) signal for the instrumentation. In the latter case, the optical output signal of the output port can be used as an external trigger.

Documents
Document Sharing Hub
Full document details: IEC 62343-5-2 2018

4.4 Detector

4.4.1 Optical power meter (OPM)

The OPM should have more than two input channels that can be triggered simultaneously and a wavelength range of the optical detector that is wider than the operating wavelength range of the DUT.

Also, the OPM should have a minimum sensitivity that is more than 10 dB lower than the value of removing the sum of the insertion loss of the test set-up (RBD and TJs), insertion loss of the DUT and absolute value of the measured dynamic crosstalk from the optical output of the light source. For example, when the optical power of the light source is 0 dBm, the insertion loss of the set-up is 5 dB and the insertion loss of the WSS is 5 dB, the minimum sensitivity of the OPM should be less than –60 dBm in order to make the measurement range of dynamic crosstalk less than –40 dB.

When measuring noise power in a dynamic state, the OPM that has a measurement dynamic range of more than 50 dB on a single range should be used because it is necessary to measure continuously the variation of optical power of more than 40 dB, which is generated within about one second. Generally, the OPM has a measurement dynamic range of about 30 dB on a single range.

Sometimes, when measuring variation of optical power that is larger than the measurement dynamic range in a single range, the maximum value of noise power in the dynamic state cannot be measured, because the switching measurement range needs about 100 ms. Linearity of the OPM sensitivity influences the measurement uncertainty of dynamic crosstalk.

The averaging time should be set less than 25 µs when the OPM measures transient response during switching of the conducting port of the WSS. It is desirable that the OPM has sufficient memory length to acquire variation of noise power in the dynamic state and can acquire data before and after switching the conducting port of the WSS automatically by detecting the variation of optical power during switching of the conducting port with the software function.

4.4.2 OE converter and oscilloscope

A substitute system for the OPM is equipment that combines an OE converter and an oscilloscope.

The OE converter has a wider wavelength range than the operating signal wavelength range of the DUT. The OE converter should have a minimum sensitivity that is more than 10 dB lower than the value of removing the sum of insertion loss of the test set-up (RBD and TJs), insertion loss of the WSS and absolute value of measured dynamic crosstalk from the optical output of the light source.

The OE converter and oscilloscope should have enough high frequency response to measure transient response during switching of the conducting port of the WSS. Frequency bandwidth of more than 100 kHz is desirable.

Linearity of the OE converter sensitivity influences the measurement uncertainty of dynamic crosstalk.

The oscilloscope should have more than two input channels that can be triggered simultaneously and sufficient memory length to acquire variation of noise power in a dynamic state.

When measuring the DUT of the output switching signal, it is desirable that the switching signal is used as a trigger signal for the oscilloscope.

Documents
Document Sharing Hub

Full document details: IEC 62343-5-2 2018