IEC 62382

Edition 2.0 2012-11

INTERNATIONAL STANDARD

NORME INTERNATIONALE

colour inside

Control systems in the process industry – Electrical and instrumentation loop check

Systèmes de commande pour les procédés industriels – Contrôle de boucle des circuits électriques et des appareillages

IEC 62382:2012

Documents
Document Sharing Hub

Full document details: IEC 62382 2012

THIS PUBLICATION IS COPYRIGHT PROTECTED

Copyright © 2012 IEC, Geneva, Switzerland

All rights reserved. Unless otherwise specified, no part of this publication may be reproduced or utilized in any form or by any means, electronic or mechanical, including photocopying and microfilm, without permission in writing from either IEC or IEC's member National Committee in the country of the requester.
If you have any questions about IEC copyright or have an enquiry about obtaining additional rights to this publication, please contact the address below or your local IEC member National Committee for further information.

Droits de reproduction réservés. Sauf indication contraire, aucune partie de cette publication ne peut être reproduite ni utilisée sous quelque forme que ce soit et par aucun procédé, électronique ou mécanique, y compris la photocopie et les microfilms, sans l'accord écrit de la CEI ou du Comité national de la CEI du pays du demandeur.
Si vous avez des questions sur le copyright de la CEI ou si vous désirez obtenir des droits supplémentaires sur cette publication, utilisez les coordonnées ci-après ou contactez le Comité national de la CEI de votre pays de résidence.

IEC Central Office
3, rue de Varembé
CH-1211 Geneva 20
Switzerland

Tel.: +41 22 919 02 11
Fax: +41 22 919 03 00
info@iec.ch
www.iec.ch

About the IEC

The International Electrotechnical Commission (IEC) is the leading global organization that prepares and publishes International Standards for all electrical, electronic and related technologies.

About IEC publications

The technical content of IEC publications is kept under constant review by the IEC. Please make sure that you have the latest edition, a corrigenda or an amendment might have been published.

Useful links:

IEC publications search - www.iec.ch/searchpub

The advanced search enables you to find IEC publications by a variety of criteria (reference number, text, technical committee,…).
It also gives information on projects, replaced and withdrawn publications.

IEC Just Published - webstore.iec.ch/justpublished

Stay up to date on all new IEC publications. Just Published details all new publications released. Available on-line and also once a month by email.

Electropedia - www.electropedia.org

The world's leading online dictionary of electronic and electrical terms containing more than 30 000 terms and definitions in English and French, with equivalent terms in additional languages. Also known as the International Electrotechnical Vocabulary (IEV) on-line.

Customer Service Centre - webstore.iec.ch/csc

If you wish to give us your feedback on this publication or need further assistance, please contact the Customer Service Centre: csc@iec.ch.

A propos de la CEI

La Commission Electrotechnique Internationale (CEI) est la première organisation mondiale qui élabore et publie des Normes internationales pour tout ce qui a trait à l'électricité, à l'électronique et aux technologies apparentées.

A propos des publications CEI

Le contenu technique des publications de la CEI est constamment revu. Veuillez vous assurer que vous possédez l'édition la plus récente, un corrigendum ou amendement peut avoir été publié.

Liens utiles:

Recherche de publications CEI - www.iec.ch/searchpub

La recherche avancée vous permet de trouver des publications CEI en utilisant différents critères (numéro de référence, texte, comité d'études,…).
Elle donne aussi des informations sur les projets et les publications remplacées ou retirées.

Just Published CEI - webstore.iec.ch/justpublished

Restez informé sur les nouvelles publications de la CEI. Just Published détaille les nouvelles publications parues. Disponible en ligne et aussi une fois par mois par email.

Electropedia - www.electropedia.org

Le premier dictionnaire en ligne au monde de termes électroniques et électriques. Il contient plus de 30 000 termes et définitions en anglais et en français, ainsi que les termes équivalents dans les langues additionnelles. Egalement appelé Vocabulaire Electrotechnique International (VEI) en ligne.

Service Clients - webstore.iec.ch/csc

Si vous désirez nous donner des commentaires sur cette publication ou si vous avez des questions contactez-nous: csc@iec.ch.

Documents
Document Sharing Hub

Full document details: IEC 62382 2012

IEC 62382

Edition 2.0 2012-11

INTERNATIONAL STANDARD

NORME INTERNATIONALE

colour inside

Control systems in the process industry – Electrical and instrumentation loop check

Systèmes de commande pour les procédés industriels – Contrôle de boucle des circuits électriques et des appareillages

INTERNATIONAL
ELECTROTECHNICAL
COMMISSION

COMMISSION
ELECTROTECHNIQUE
INTERNATIONALE

PRICE CODE
CODE PRIX S

ICS 25.040.40

ISBN 978-2-83220-480-1

Warning! Make sure that you obtained this publication from an authorized distributor.
Attention! Veuillez vous assurer que vous avez obtenu cette publication via un distributeur agréé.

AVA Documents
Document Sharing Hub

® Registered trademark of the International Electrotechnical Commission
Marque déposée de la Commission Electrotechnique Internationale

Full document details: IEC 62382 2012

CONTENTS

FOREWORD ... 3
INTRODUCTION ... 5
1 Scope ... 6
2 Normative references ... 6
3 Terms, definitions and abbreviated terms ... 6
3.1 Terms and definitions ... 6
3.2 Abbreviated terms ... 8
4 Order of loop check and cold commissioning in the project schedule ... 8
5 Loop check content ... 9
5.1 Included activities ... 9
5.2 Activities excluded ... 11
6 Loop check procedure ... 11
6.1 Documentation check ... 11
6.2 Visual inspection ... 11
6.3 Function check ... 12
6.3.1 General ... 12
6.3.2 Sensors ... 12
6.3.3 Actuators ... 12
6.3.4 Motor loops ... 12
6.3.5 Inter-loops ... 13
6.3.6 Interlocks ... 13
6.3.7 Quality loops ... 13
6.3.8 Safety loops ... 13
6.4 Checkout of E&I Infrastructure and E&I concepts ... 13
6.5 Additional tests – Quality and safety relevant loops ... 13
7 Documents and test sheets ... 14
7.1 Input documents ... 14
7.2 Test sheets ... 14
7.3 Documents generated upon completion of loop check ... 14
7.4 Loop check results ... 14
8 Quality assurance ... 14
9 Safety aspects ... 15
Annex A (informative) Test report for analogue input loop ... 16
Annex B (informative) Test report for binary input loop ... 17
Annex C (informative) Test report for analogue output loop ... 18
Annex D (informative) Test report for binary output loop ... 19
Annex E (informative) Test report for motors and variable frequency drives ... 20

Figure 1 – Definition of phases and milestones ... 9
Figure 2 – Loop components ... 10

Documents
Document Sharing Hub

Full document details: IEC 62382 2012

INTERNATIONAL ELECTROTECHNICAL COMMISSION

CONTROL SYSTEMS IN THE PROCESS INDUSTRY – ELECTRICAL AND INSTRUMENTATION LOOP CHECK

FOREWORD

1) The International Electrotechnical Commission (IEC) is a worldwide organization for standardization comprising all national electrotechnical committees (IEC National Committees). The object of IEC is to promote international co-operation on all questions concerning standardization in the electrical and electronic fields. To this end and in addition to other activities, IEC publishes International Standards, Technical Specifications, Technical Reports, Publicly Available Specifications (PAS) and Guides (hereafter referred to as "IEC Publication(s)"). Their preparation is entrusted to technical committees; any IEC National Committee interested in the subject dealt with may participate in this preparatory work. International, governmental and non-governmental organizations liaising with the IEC also participate in this preparation. IEC collaborates closely with the International Organization for Standardization (ISO) in accordance with conditions determined by agreement between the two organizations.
2) The formal decisions or agreements of IEC on technical matters express, as nearly as possible, an international consensus of opinion on the relevant subjects since each technical committee has representation from all interested IEC National Committees.
3) IEC Publications have the form of recommendations for international use and are accepted by IEC National Committees in that sense. While all reasonable efforts are made to ensure that the technical content of IEC Publications is accurate, IEC cannot be held responsible for the way in which they are used or for any misinterpretation by any end user.
4) In order to promote international uniformity, IEC National Committees undertake to apply IEC Publications transparently to the maximum extent possible in their national and regional publications. Any divergence between any IEC Publication and the corresponding national or regional publication shall be clearly indicated in the latter.
5) IEC itself does not provide any attestation of conformity. Independent certification bodies provide conformity assessment services and, in some areas, access to IEC marks of conformity. IEC is not responsible for any services carried out by independent certification bodies.
6) All users should ensure that they have the latest edition of this publication.
7) No liability shall attach to IEC or its directors, employees, servants or agents including individual experts and members of its technical committees and IEC National Committees for any personal injury, property damage or other damage of any nature whatsoever, whether direct or indirect, or for costs (including legal fees) and expenses arising out of the publication, use of, or reliance upon, this IEC Publication or any other IEC Publications.
8) Attention is drawn to the Normative references cited in this publication. Use of the referenced publications is indispensable for the correct application of this publication.
9) Attention is drawn to the possibility that some of the elements of this IEC Publication may be the subject of patent rights. IEC shall not be held responsible for identifying any or all such patent rights.

International Standard IEC 62382 has been prepared by subcommittee 65E: Devices and integration in enterprise systems, of IEC technical committee 65: Industrial-process measurement, control and automation.

This second edition cancels and replaces the first edition published in 2006. This edition constitutes a technical revision.

The main changes with respect to the previous edition are listed below:

– The definition of the documents mentioned in the standards is in accordance with IEC 62708: *Documents for Electrical and Instrumentation Projects in the Process Industry*.
– Subclause 6.3 has been revised.

The text of this standard is based on the following documents:

FDIS	Report on voting
65E/271/FDIS	65E/282/RVD

Documents
Document Sharing Hub

Full document details: IEC 62382 2012

Full information on the voting for the approval of this standard can be found in the report on voting indicated in the above table.

This publication has been drafted in accordance with the ISO/IEC Directives, Part 2.

The committee has decided that the contents of this publication will remain unchanged until the stability date indicated on the IEC web site under "http://webstore.iec.ch" in the data related to the specific publication. At this date, the publication will be

- reconfirmed,
- withdrawn,
- replaced by a revised edition, or
- amended.

IMPORTANT – The 'colour inside' logo on the cover page of this publication indicates that it contains colours which are considered to be useful for the correct understanding of its contents. Users should therefore print this document using a colour printer.

Documents
Document Sharing Hub

Full document details: IEC 62382 2012

INTRODUCTION

The inspection and verification of the individual measurements and controls in conjunction with the control systems used to monitor these devices (DCS, PLC, etc.) is referred to as loop check. In industry, numerous methods and philosophies are used to check the instrumentation and controls after mechanical installation within projects for modified or new facilities.

This standard was created to provide a better understanding of what loop check consists of and also to provide a standard methodology for executing a loop check.

The annexes of this standard contain forms which may be used in the check procedures. Buyers of this standard may copy these forms for their own purposes only in the required amount.

Documents
Document Sharing Hub

Full document details: IEC 62382 2012

CONTROL SYSTEMS IN THE PROCESS INDUSTRY – ELECTRICAL AND INSTRUMENTATION LOOP CHECK

1 Scope

This International Standard describes the steps recommended to complete a loop check, which comprises the activities between the completion of the loop construction (including installation and point-to-point checks) and the start-up of cold commissioning. This standard is applicable for the construction of new plants and for expansion/retrofits (i.e. revamping) of E&I installations in existing plants (including PLC, BAS, DCS, panel-mounted and field instrumentation). It does not include a detailed checkout of power distribution systems, except as they relate to the loops being checked (i.e. a motor starter or a power supply to a four-wire transmitter).

For application in the pharmaceutical or other highly specialized industries, additional guidelines (for example, Good Automated Manufacturing Practice (GAMP)), definitions and stipulations should apply in accordance with existing standards, for example, for GMP Compliance 21 CFR (FDA) and the Standard Operating Procedure of the European Medicines Agency (SOP/INSP/2003).

2 Normative references

The following documents, in whole or in part, are normatively referenced in this document and are indispensable for its application. For dated references, only the edition cited applies. For undated references, the latest edition of the referenced document (including any amendments) applies.

IEC 61131 (all parts), *Programmable controllers*

IEC 62337, *Commissioning of electrical, instrumentation and control systems in the process industry – Specific phases and milestones*

IEC 62424,*Representation of process control engineering – Requests in P&I diagrams and data exchange between P&ID tools and PCE-CAE tools*

IEC 62708, *Documents for Electrical and Instrumentation Projects in the Process Industry*[1]

3 Terms, definitions and abbreviated terms

3.1 Terms and definitions

For the purposes of this document, the following terms and definitions apply.

3.1.1
precommissioning
phase, during which the activities of non-operating adjustments, cold alignment checks, cleaning, and testing of machinery take place

EXAMPLE Please refer to the annexes.

[1] This standard is under consideration.

Documents
Document Sharing Hub

Full document details: IEC 62382 2012

3.1.2
mechanical completion
milestone, which is achieved when the plant, or any part thereof, has been erected and tested in accordance with drawings, specifications, instructions, and applicable codes and regulations to the extent necessary to permit cold commissioning

Note 1 to entry: This includes completion of all necessary electrical and instrumentation work. This is a milestone marking the end of the precommissioning activities.

3.1.3
cold commissioning
phase, during which the activities associated with the testing and operation of equipment or facilities using test media such as water or inert substances prior to introducing any chemical in the system take place

3.1.4
start-up
milestone marking the end of cold commissioning

Note 1 to entry: At this stage, the operating range of every instrument loop is already adjusted to reflect the actual working condition.

3.1.5
hot commissioning
phase, during which the activities associated with the testing and operation of equipment or facilities using the actual chemical process prior to making an actual production run take place

3.1.6
start of production
milestone marking the end of hot commissioning

Note 1 to entry: At this stage, the plant is ready for full and continuous operation.

3.1.7
performance test
milestone at which the production plant runs to its design capacity

Note 1 to entry: This test, carried out by the owner's personnel with the help and supervision of the contractor, should demonstrate the contractor's process performance and consumption guarantees as specified in the contract.

3.1.8
acceptance of plant
milestone at which the plant is formally turned over from the contractor to the owner

3.1.9
basic software
software which, at a minimum, contains the graphic faceplates, base-level alarms and switch points, basic interlocking and analogue control. In the case of safety loops, any safety switch point should be included if it is not in the basic database

3.1.10
loop list
tabulated list of all E&I tags with tagging, function and PID reference

3.1.11
loop diagram
representation of hardware and/or basic software functions of a control loop with graphical symbols e.g. according to IEC 62424. It shows equipment in its topological order and wiring including the terminals

AVA Documents
Document Sharing Hub

Full document details: IEC 62382 2012

3.1.12
loop sheet
data sheet with all essential E&I data concerning tagging, function, description, measuring range, location, process data, instrument data, etc

3.1.13
function diagram or logic diagram
description of the E&I functions according to IEC 61131. Use of this term/such a diagram is limited to digital signal processing only.

3.1.14
cause and effect matrix
actuators and sensors assigned to coloums and rows according their function, including their related switching and/or alarm function

3.1.15
user requirement specification
rough user specification in view of the customer to be detailed by the requirement specification

3.1.16
requirement specification
complete description of all requirements for the realisation (e.g. of an automation system)

3.1.17
trip point list and configuration parameter list
tabulated list of all variable parameter for E&I equipment

3.2 Abbreviated terms

BAS	Building automation systems
C&E	Cause & effect matrix
DCS	Distributed control system
E&I	Electrical and instrumentation and control systems
ESD	Emergency shut-down system
FAT	Factory acceptance testing
FUP	Functional or logic diagram
HMI	Human machine interface
HW	Hardware
MC	Mechanical completion
MCC	Motor control centre
PLC	Programmable logic controller
SAT	Site acceptance test
SIT	Site integration test
SW	Software

4 Order of loop check and cold commissioning in the project schedule

The loop checks will ideally occur in the precommissioning phase of the schedule shown in Figure 1.

Documents
Document Sharing Hub
Full document details: IEC 62382 2012

However, normal occurrence is that the loop checks begin when any specific loop is completed and turned over to the checkout crew even if it is during the "construction" phase. The loop check could substantially overlap the "construction" phase.

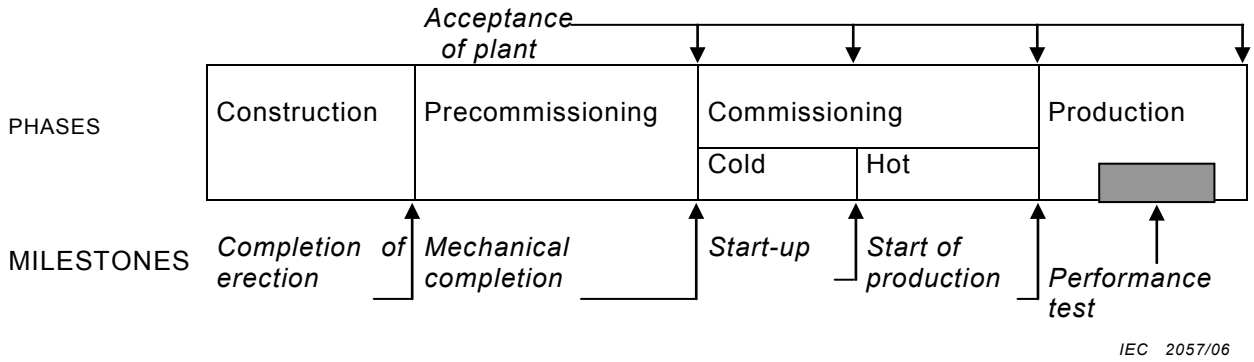

NOTE Construction and precommissioning activities could be overlapping.

Figure 1 – Definition of phases and milestones

The loop check has the following characteristics:

- it follows the E&I construction phase and FAT of the DCS in a project;
- it is the last systematic check before mechanical completion to ensure that:
- all E&I documents (loop sheets, etc.) are available and correspond to their latest revision;
- all instrumentation and equipment is delivered according to the design specifications if not already verified during FAT or quality check during equipment receiving;
- installation has occurred in accordance to engineering documents, applicable codes and local regulations;
- loop functionality is correct.

This provides that:

- in a project, the quality check for E&I engineering, and for the delivered instrumentation and equipment and their installation;
- the base for the commissioning phase which consists of the following phases:

  a) cold commissioning

  phase during which functional testing of equipment and facilities, using test media such as water or inert substances, takes place;

  b) hot commissioning (chemical start-up)

  phase during which activities associated with the testing and operation of equipment using the actual process chemicals (initial start-up of process) are performed.

  The main activities in the cold and hot commissioning phases are system verification tuning of loops and instruments and control schemes.

5 Loop check content

5.1 Included activities

The loop check includes the following elements of a "single loop" (sensor and/or actuator).

- Hardware components:
  – the installed instruments or components in the field or in their final destination;

Documents
Document Sharing Hub
Full document details: IEC 62382 2012

  - the equipment in E&I rooms;
  - hard wired functionality between sensor and actuator loops (if applicable);
  - the input and output (if applicable) cards of process control systems.
- The basic software components (including the graphic faceplates, base level alarms and switch points, basic interlocking and basic analogue control) to test the field devices. The loop check uses the basic graphics/faceplates of the control system (see Figure 2). Note that primary inputs and outputs may be connected not only to DCS but also to ESD, PLC, unit controllers and other subsystems. They all are visualized on DCS.

The actual loop check involves the three following phases (see details in Clause 6):

a) Documentation checkout

Check for the completeness and consistency of loop documents, including any documents from the installation or FAT.

b) Visual inspection of loop devices for correct installation and tagging.

c) Function check

A testing device is used to exercise all the components of the loop (including hardware, wiring and software). It checks that all the components function correctly and that the DCS or panel readouts are accurate.

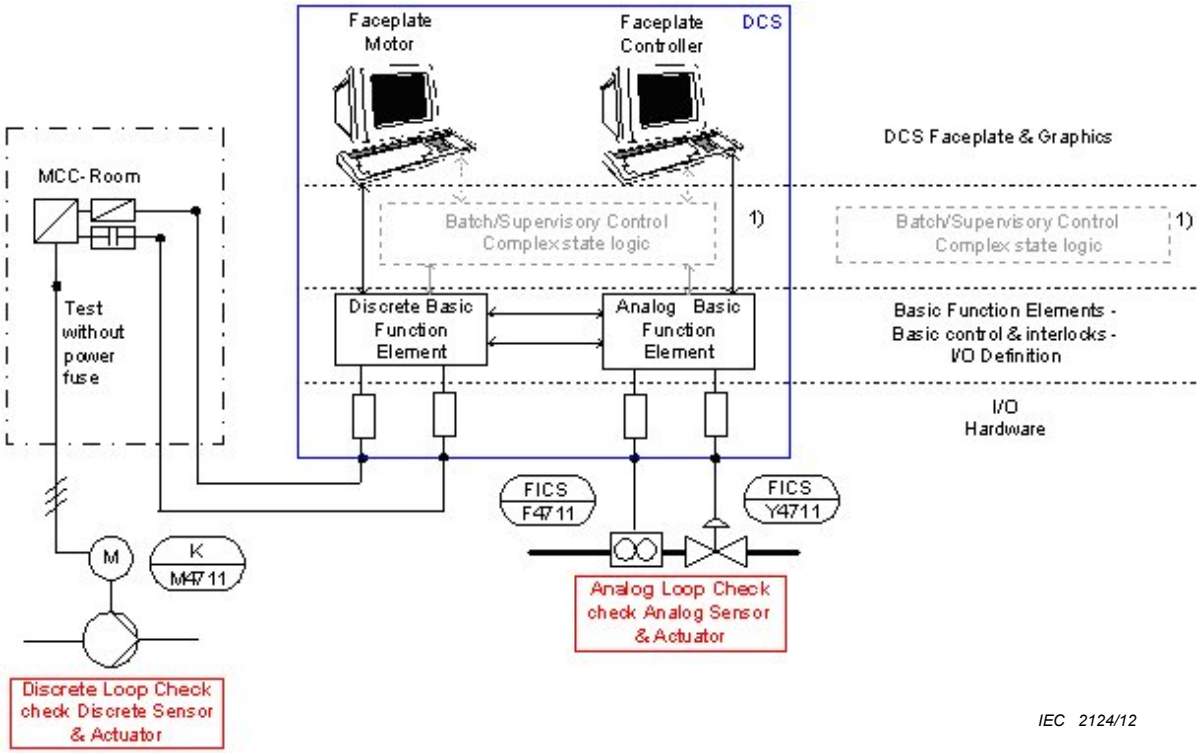

[1] Check of the operational configuration is completed during cold commissioning or hot commissioning.

Figure 2 – Loop components

During the loop check the following three types of deficiencies can be found:

d) Installation failures

Installation failures are discrepancies with the specified hardware or the method of installation (wrong installation, wrong instruments, etc.). The construction contractor should fix these problems.

e) Configuration failures

Documents
Document Sharing Hub
Full document details: IEC 62382 2012

Configuration failures are discrepancies with the original software specification. The programming contractor or E&I engineering should fix these problems.

f) E&I engineering failures

Engineering failures are to be suspected when, despite good installation of the right instruments, the desired functionality cannot be realized (for example, fault in wiring diagram; etc.) These problems should be corrected by E&I engineering.

Additional deficiencies might be in the process design, but this can only be determined after process start-up.

5.2 Activities excluded

The loop check does not consist of:

- test activities possible without construction being completed:
- software testing using simulation tools;
- other factory acceptance tests performed at the contractor or vendor's factories;
- other software checkout activities (FAT,etc.);
- detailed construction and mechanical inspections performed during the construction phase:
- cable testing during construction (Hipot, Meggering, etc.);
- point-to-point wiring checks;
- the testing of the internal workings of package units (i.e. process subunits, machinery, complex analysers, etc.) is excluded; only the I/O testing of this equipment is included in the loop check;
- activities belonging to the commissioning phase: tuning of loops, instruments and control schemes (for example, calibrating of level transmitters by filling tanks; verification of complex control schemes; tuning of continuous control schemes; etc.).

6 Loop check procedure

6.1 Documentation check

The documentation check consists of the following activities.

- The checkout of the loop should first establish that all documentation pertaining to that loop is available, consistent and correctly labelled if the loop is a safety, quality or environmental loop.
- The pertinent documentation shall, as a minimum, contain a loop diagram and a specification containing all calibration and functional data necessary to verify the correct operation of the loop (loop sheet).

6.2 Visual inspection

The visual inspection consists of the following activities.

- The installation should be visually checked against the documents to ensure that the correct instruments were installed and that the installation is in accordance with the hardware specifications and loop diagrams/circuit diagrams.
- Valves and flowmeters are checked for correct installation with the direction of flow.
- Can local instrumentation be easily read?
- Are all the elements of the loop available, accessible, labelled and installed in a clean and neat manner (including junction boxes, panels, cabinets, racks)?
- Is the tagging clear and unambiguous (no danger of false interpretation)?

Documents
Document Sharing Hub

Full document details: IEC 62382 2012

- Are the field elements adequately protected from mechanical or environmental damage?

6.3 Function check

6.3.1 General

The function checks concerning field devices are ideally performed in well defined blocks (related technical blocks like process units or related racks in E&I rooms). The actual method and order of checkout should be defined by the project team prior to starting the loop check.

The purpose of the function check is to exercise all components of a loop during one test and measure their accuracy. Checking out a loop in pieces does not qualify as a function check and shall not substitute for the function check.

Detailed checks have to be done according following list. Simulations could be done in different ways depending on the type of device (4 – 20 mA, HART or fieldbus).

6.3.2 Sensors

Functional checking of sensors is as follows.

- Checking of tag number and parameters.
- Simulation of transmitter signal in increments to full span to ensure that the DCS or panel readout follows the input.
- Simulation of transmitter signal out of DCS range (high and low), checking of substitute value and failure reaction in DCS.
- Simulation of a sensor failure to verify the correct failure reaction.
- Disconnection of the sensor, checking of the failure reaction in DCS.
- Reconnection of the sensor, checking if device is correctly and automatically initiated (fieldbus); checking of behaviour of the live list (fieldbus).

6.3.3 Actuators

Functional checking of actuators is as follows.

- Checking of tag number and parameters.
- If the loop has an analogue output, the actuator should be observed to verify that it follows the incremental output changes within a specified tolerance.
- Simulation of an actuator failure to verify the correct failure reaction.
- Simulation of a limit switch failure, checking of failure reaction in DCS.
- Disconnection of actuator, checking of the failsafe position and the failure reaction in DCS.
- Reconnection of actuator, checking if device is correctly and automatically initiated; checking of behaviour of the live list (fieldbus).
- Disconnection of air supply and checking of failsafe behaviour.

6.3.4 Motor loops

Functional checking of motor loops is as follows.

- Checking of parameters in motor protection device, compare with motor data
- Simulation of motor protection device signals to verify correct readout in DCS.
- Simulation of motor protection device failure and checking of correct reaction in DCS.
- Checking of correct operation with motor protection device in test mode and removed motor fuses
- Checking of correct function of local ON/OFF switches

Documents
Document Sharing Hub

Full document details: IEC 62382 2012