IEC 62444

Edition 1.0 2010-08

INTERNATIONAL STANDARD

NORME INTERNATIONALE

Cable glands for electrical installations

Presse-étoupes pour installations électriques

IEC 62444:2010

Documents
Document Sharing Hub

Full document details: IEC 62444 2010

THIS PUBLICATION IS COPYRIGHT PROTECTED

Copyright © 2010 IEC, Geneva, Switzerland

All rights reserved. Unless otherwise specified, no part of this publication may be reproduced or utilized in any form or by any means, electronic or mechanical, including photocopying and microfilm, without permission in writing from either IEC or IEC's member National Committee in the country of the requester.
If you have any questions about IEC copyright or have an enquiry about obtaining additional rights to this publication, please contact the address below or your local IEC member National Committee for further information.

Droits de reproduction réservés. Sauf indication contraire, aucune partie de cette publication ne peut être reproduite ni utilisée sous quelque forme que ce soit et par aucun procédé, électronique ou mécanique, y compris la photocopie et les microfilms, sans l'accord écrit de la CEI ou du Comité national de la CEI du pays du demandeur.
Si vous avez des questions sur le copyright de la CEI ou si vous désirez obtenir des droits supplémentaires sur cette publication, utilisez les coordonnées ci-après ou contactez le Comité national de la CEI de votre pays de résidence.

IEC Central Office
3, rue de Varembé
CH-1211 Geneva 20
Switzerland
Email: inmail@iec.ch
Web: www.iec.ch

About the IEC

The International Electrotechnical Commission (IEC) is the leading global organization that prepares and publishes International Standards for all electrical, electronic and related technologies.

About IEC publications

The technical content of IEC publications is kept under constant review by the IEC. Please make sure that you have the latest edition, a corrigenda or an amendment might have been published.

- Catalogue of IEC publications: www.iec.ch/searchpub
The IEC on-line Catalogue enables you to search by a variety of criteria (reference number, text, technical committee,…). It also gives information on projects, withdrawn and replaced publications.
- IEC Just Published: www.iec.ch/online_news/justpub
Stay up to date on all new IEC publications. Just Published details twice a month all new publications released. Available on-line and also by email.
- Electropedia: www.electropedia.org
The world's leading online dictionary of electronic and electrical terms containing more than 20 000 terms and definitions in English and French, with equivalent terms in additional languages. Also known as the International Electrotechnical Vocabulary online.
- Customer Service Centre: www.iec.ch/webstore/custserv
If you wish to give us your feedback on this publication or need further assistance, please visit the Customer Service Centre FAQ or contact us:
Email: csc@iec.ch
Tel.: +41 22 919 02 11
Fax: +41 22 919 03 00

A propos de la CEI

La Commission Electrotechnique Internationale (CEI) est la première organisation mondiale qui élabore et publie des normes internationales pour tout ce qui a trait à l'électricité, à l'électronique et aux technologies apparentées.

A propos des publications CEI

Le contenu technique des publications de la CEI est constamment revu. Veuillez vous assurer que vous possédez l'édition la plus récente, un corrigendum ou amendement peut avoir été publié.

- Catalogue des publications de la CEI: www.iec.ch/searchpub/cur_fut-f.htm
Le Catalogue en-ligne de la CEI vous permet d'effectuer des recherches en utilisant différents critères (numéro de référence, texte, comité d'études,…). Il donne aussi des informations sur les projets et les publications retirées ou remplacées.
- Just Published CEI: www.iec.ch/online_news/justpub
Restez informé sur les nouvelles publications de la CEI. Just Published détaille deux fois par mois les nouvelles publications parues. Disponible en-ligne et aussi par email.
- Electropedia: www.electropedia.org
Le premier dictionnaire en ligne au monde de termes électroniques et électriques. Il contient plus de 20 000 termes et définitions en anglais et en français, ainsi que les termes équivalents dans les langues additionnelles. Egalement appelé Vocabulaire Electrotechnique International en ligne.
- Service Clients: www.iec.ch/webstore/custserv/custserv_entry-f.htm
Si vous désirez nous donner des commentaires sur cette publication ou si vous avez des questions, visitez le FAQ du Service clients ou contactez-nous:
Email: csc@iec.ch
Tél.: +41 22 919 02 11
Fax: +41 22 919 03 00

Documents
Document Sharing Hub

Full document details: IEC 62444 2010

IEC 62444

Edition 1.0 2010-08

INTERNATIONAL STANDARD

NORME INTERNATIONALE

Cable glands for electrical installations

Presse-étoupes pour installations électriques

INTERNATIONAL
ELECTROTECHNICAL
COMMISSION

COMMISSION
ELECTROTECHNIQUE
INTERNATIONALE

PRICE CODE
CODE PRIX U

ICS 29.120.10

ISBN 978-2-88912-151-9

® Registered trademark of the International Electrotechnical Commission
Marque déposée de la Commission Electrotechnique Internationale

Documents
Document Sharing Hub

Full document details: IEC 62444 2010

CONTENTS

FOREWORD 4
1 Scope 6
2 Normative references 6
3 Terms and definitions 6
4 General requirements 7
5 General conditions for tests 8
6 Classification 9
6.1 According to material 9
6.2 According to mechanical properties 9
6.3 According to electrical properties 10
6.4 According to resistance to external influences 10
6.5 According to sealing system 10
7 Marking and documentation 11
7.1 Marking 11
7.2 Durability and legibility 11
7.3 Documentation 11
8 Construction 12
9 Mechanical properties 12
9.1 General 12
9.2 Cable retention test 13
9.3 Cable anchorage test for non-armoured cable 15
9.4 Cable anchorage test for armoured cable 17
9.5 Resistance to impact 19
9.6 Seal performance 22
10 Electrical properties 22
10.1 Equipotential bonding to electrical equipment 22
10.2 Equipotential bonding to metallic layer(s) of cable 22
10.3 Protective connection to earth 23
10.3.1 General 23
10.3.2 Electrical current test 23
11 Electromagnetic compatibility 24
12 External influences 25
12.1 Degree of protection in accordance with IEC 60529 (IP Code) 25
12.1.1 General 25
12.1.2 Degree of protection against foreign solid objects 25
12.1.3 Degree of protection against ingress of water 25
12.2 Resistance to corrosion 25
12.3 Resistance to ultraviolet light 25
13 Fire hazard 26
13.1 Reaction to fire 26
13.1.1 General 26
13.1.2 Contribution to fire 26
13.1.3 Spread of fire 26
13.2 Resistance to fire 26

Documents
Document Sharing Hub
Full document details: IEC 62444 2010

Annex A (normative) Particular requirements for cable glands for electrical installations with NPT entry threads 27
Annex B (informative) Test sequence 28
Bibliography 29

Figure 1 – Typical arrangement for cable retention test 14
Figure 2 – Typical arrangement for cable anchorage pull test 16
Figure 3 – Typical arrangement for cable anchorage twist test 17
Figure 4 – Typical arrangement for cable anchorage test for armoured cable 18
Figure 5 – Typical arrangement for impact test 21
Figure 6 – Typical arrangement for electrical current tests 24

Table 1 – Clearance holes for cable glands for test purposes 9
Table 2 – Pull forces for cable retention and cable anchorage 15
Table 3 – Torque value for cable anchorage twist test 17
Table 4 – Impact values 20
Table 5 – Electrical current values 23
Table A.1 – Clearance holes for NPT cable glands for test purposes 27

Documents
Document Sharing Hub

Full document details: IEC 62444 2010

INTERNATIONAL ELECTROTECHNICAL COMMISSION

CABLE GLANDS FOR ELECTRICAL INSTALLATIONS

FOREWORD

1) The International Electrotechnical Commission (IEC) is a worldwide organization for standardization comprising all national electrotechnical committees (IEC National Committees). The object of IEC is to promote international co-operation on all questions concerning standardization in the electrical and electronic fields. To this end and in addition to other activities, IEC publishes International Standards, Technical Specifications, Technical Reports, Publicly Available Specifications (PAS) and Guides (hereafter referred to as "IEC Publication(s)"). Their preparation is entrusted to technical committees; any IEC National Committee interested in the subject dealt with may participate in this preparatory work. International, governmental and non-governmental organizations liaising with the IEC also participate in this preparation. IEC collaborates closely with the International Organization for Standardization (ISO) in accordance with conditions determined by agreement between the two organizations.
2) The formal decisions or agreements of IEC on technical matters express, as nearly as possible, an international consensus of opinion on the relevant subjects since each technical committee has representation from all interested IEC National Committees.
3) IEC Publications have the form of recommendations for international use and are accepted by IEC National Committees in that sense. While all reasonable efforts are made to ensure that the technical content of IEC Publications is accurate, IEC cannot be held responsible for the way in which they are used or for any misinterpretation by any end user.
4) In order to promote international uniformity, IEC National Committees undertake to apply IEC Publications transparently to the maximum extent possible in their national and regional publications. Any divergence between any IEC Publication and the corresponding national or regional publication shall be clearly indicated in the latter.
5) IEC itself does not provide any attestation of conformity. Independent certification bodies provide conformity assessment services and, in some areas, access to IEC marks of conformity. IEC is not responsible for any services carried out by independent certification bodies.
6) All users should ensure that they have the latest edition of this publication.
7) No liability shall attach to IEC or its directors, employees, servants or agents including individual experts and members of its technical committees and IEC National Committees for any personal injury, property damage or other damage of any nature whatsoever, whether direct or indirect, or for costs (including legal fees) and expenses arising out of the publication, use of, or reliance upon, this IEC Publication or any other IEC Publications.
8) Attention is drawn to the Normative references cited in this publication. Use of the referenced publications is indispensable for the correct application of this publication.
9) Attention is drawn to the possibility that some of the elements of this IEC Publication may be the subject of patent rights. IEC shall not be held responsible for identifying any or all such patent rights.

International Standard IEC 62444 has been prepared by subcommittee 23A: Cable management systems, of IEC technical committee 23: Electrical accessories.

The text of this standard is based on the following documents:

FDIS	Report on voting
23A/606/FDIS	23A/618/RVD

Full information on the voting for the approval of this standard can be found in the report on voting indicated in the above table.

This publication has been drafted in accordance with the ISO/IEC Directives, Part 2.

NOTE The following print types are used:

– requirements: in roman type;
– *test specifications: in italic type;*
– notes: in small roman type.

AVA Documents Document Sharing Hub

Full document details: IEC 62444 2010

The committee has decided that the contents of this publication will remain unchanged until the stability date indicated on the IEC web site under "http://webstore.iec.ch" in the data related to the specific publication. At this date, the publication will be

- reconfirmed,
- withdrawn,
- replaced by a revised edition, or
- amended.

Documents
Document Sharing Hub

Full document details: IEC 62444 2010

CABLE GLANDS FOR ELECTRICAL INSTALLATIONS

1 Scope

This Standard provides requirements and tests for the construction and performance of cable glands. This standard covers complete cable glands as supplied by the manufacturer or the supplier responsible for placing the product on the market. This standard does not cover cable glands for mineral insulated cables.

This standard covers cable glands with IEC 60423 metric entry threads.

This standard can be used as a guide for cable glands with other type of entry threads.

NOTE Certain cable glands may also be used "in Hazardous Areas." Regard should then be taken of other or additional requirements necessary for the enclosure to be installed in such conditions, for example as specified in the IEC 60079 series.

2 Normative references

The following referenced documents are indispensable for the application of this document. For dated references, only the edition cited applies. For undated references, the latest edition of the referenced document (including any amendments) applies.

IEC 60423:2007, *Conduit systems for cable management – Outside diameters of conduits for electrical installations and threads for conduits and fittings*

IEC 60529:1989, *Degrees of protection provided by enclosures (IP Code)*
Amendment 1 (1999)[1]

IEC 60695-2-11:2000, *Fire hazard testing – Part 2-11: Glowing/hot-wire based test methods – Glow-wire flammability test method for end-products*

ISO 868:2003, *Plastics and ebonite – Determination of indentation hardness by means of durometer (Shore hardness)*

ISO 4287:1997, *Geometrical product specifications (GPS) – Surface texture: Profile method – Terms, definitions and surface texture parameters*

ISO 9227:2006, *Corrosion tests in artificial atmospheres – Salt spray tests*

3 Terms and definitions

For the purposes of this document, the following definitions apply.

3.1
cable gland
a device designed to permit the entry of a cable, flexible cable or insulated conductor into an enclosure, and which provides sealing and retention. It may also provide other functions such as earthing, bonding, insulation, cable guarding, strain relief or a combination of these

[1] There is a consolidated edition 2.1 (2001) that includes IEC 60529 (1989) and its amendment 1 (1999).

AVA Documents
Document Sharing Hub

Full document details: IEC 62444 2010

3.2
entry thread
the threaded portion of a cable gland which is intended to be attached to an enclosure or equipment

3.3
cable gland size
the nominal diameter of the entry thread

3.4
cable retention
the minimum ability of a cable gland to limit the displacement of a fitted cable under static load

3.5
cable anchorage
the ability of a cable gland to limit the displacement of a fitted cable under dynamic and torque loads

3.6
series
cable glands of the same classification and design but with different dimensions

3.7
clearance hole
unthreaded opening in an enclosure or equipment intended to permit entry of a cable gland

3.8
metallic cable gland
cable gland which consists of metallic material only

NOTE Sealing systems are excluded from this definition.

3.9
non-metallic cable gland
cable gland which consists of non-metallic material only

NOTE Sealing systems are excluded from this definition.

3.10
composite cable gland
cable gland comprising both metallic and non-metallic materials

NOTE Sealing systems are excluded from this definition.

3.11
single-orifice seal
seal with one orifice suitable for the passage of a single cable

3.12
multi-orifice seal
seal with more than one orifice, each orifice being suitable for the passage of a separate cable

4 General requirements

Cable glands shall be designed to provide in normal use all the functions declared by the manufacturer or supplier.

AVA Documents
Document Sharing Hub

Full document details: IEC 62444 2010

5 General conditions for tests

5.1 Tests according to this standard are type tests.

5.2 Unless otherwise specified, the tests shall be carried out on new cable glands assembled and mounted in accordance with the manufacturer's or supplier's instructions, as declared in 7.3.

There shall be no adjustment between or during the tests.

NOTE Remounting of the sample between tests is not considered to be adjustment.

5.3 Unless otherwise specified, the tests shall be carried out at an ambient temperature of (20 ± 5) °C.

5.4 Non-metallic and composite cable glands as well as the sealing systems of metallic cable glands shall be pre-conditioned in an oven at (70 ± 2) °C and maintained for (168 ± 4) h. If the maximum temperature declared by the manufacturer is greater than 65 °C, then the test temperature shall be the declared temperature +5 °C.

5.5 Prior to the tests, non-metallic and composite cable glands as well as the sealing systems of metallic cable glands shall be conditioned at a temperature of (20 ± 5) °C and a relative humidity between 40 % and 60 % for a minimum of 24 h or longer as specified by the manufacturer.

5.6 Unless otherwise specified, three samples shall be subjected to the relevant tests.

In the case of a series of cable glands, three samples of the largest and smallest and one sample of all other sizes of the same series shall be subjected to the relevant tests.

In the case of a cable gland utilising alternative sealing arrangements, each sealing arrangement as specified by the manufacturer or supplier shall be considered as a sample.

If a sample does not satisfy a test due to an assembly or manufacturing fault, that test and any preceding one which may have influenced the results of the test shall be repeated on 3 new samples of the size that failed. The tests which follow shall be made in the required sequence. All new samples shall fulfil the requirements.

5.7 Unless otherwise specified test mandrels shall consist of bars having a hardness of 65 Shore D ± 15 points in accordance with ISO 868 and a surface roughness less than or equal to 7 μm R_a in accordance with ISO 4287. The test mandrel shall have a tolerance of ± 0,2 mm for test mandrels up to and including 16 mm in diameter and ± 0,3 mm for test mandrels larger than 16 mm in diameter. The shape shall be circular or a profile simulating the outer dimension of the cables as declared by the manufacturer or supplier.

5.8 Clearance holes for test purposes shall have the values as given in Table 1, unless otherwise specified by the manufacturer or supplier.

NOTE Annex B shows test sequences which shall be used for guidance only.

Documents
Document Sharing Hub

Full document details: IEC 62444 2010

Table 1 – Clearance holes for cable glands for test purposes

Cable gland size	Thread size	Clearance hole diameter mm
6	M 6	6 (0/ +0,2)
8	M 8	8 (0/ +0,2)
10	M 10	10 (0/ +0,2)
12	M 12	12 (0/ +0,2)
16	M 16	16 (0/ +0,2)
20	M 20	20 (0/ +0,2)
25	M 25	25 (0/ +0,2)
32	M 32	32 (0/ +0,3)
40	M 40	40 (0/ +0,3)
50	M 50	50 (0/ +0,4)
63	M 63	63 (0/ +0,4)
75	M 75	75 (0/ +0,5)
90	M 90	90 (0/ +0,5)
110	M 110	110 (0/ +0,5)

6 Classification

Cable glands shall be classified for test purposes in accordance with 6.1, 6.2 and 6.5 and where appropriate, with 6.3 and 6.4.

6.1 According to material

6.1.1 Metallic cable glands

6.1.2 Non-metallic cable glands

6.1.3 Composite cable glands

6.2 According to mechanical properties

6.2.1 Non-armoured cable retention or anchorage

6.2.1.1 Anchorage Type A

6.2.1.2 Anchorage Type B

6.2.1.3 Retention only

6.2.2 Armoured cable anchorage

6.2.2.1 Anchorage Type C

6.2.2.2 Anchorage Type D

6.2.3 Impact category

Documents
Document Sharing Hub

Full document details: IEC 62444 2010

6.2.3.1 Category 1

6.2.3.2 Category 2

6.2.3.3 Category 3

6.2.3.4 Category 4

6.2.3.5 Category 5

6.2.3.6 Category 6

6.2.3.7 Category 7

6.2.3.8 Category 8

6.3 According to electrical properties

6.3.1 With electrical continuity characteristics

6.3.1.1 Equipotential bonding to enclosure

6.3.1.2 Equipotential bonding to metallic layer(s) of cable

NOTE A metallic layer may be provided for purposes such as earthing, screening, armouring or mechanical protection.

6.3.1.3 Cable glands with connection to protective earth

6.3.1.3.1 Category A

6.3.1.3.2 Category B

6.3.1.3.3 Category C

6.4 According to resistance to external influences

6.4.1 Degree of protection in accordance with IEC 60529 (IP Code) with a minimum of IP54

6.4.2 Temperature range if different from that defined in Subclause 8.5

6.4.3 Resistance to ultraviolet light for non-metallic cable glands

6.4.3.1 Resistance to ultraviolet light not declared

6.4.3.2 Resistant to ultraviolet light

6.5 According to sealing system

6.5.1 With a single-orifice seal

6.5.2 With a multi-orifice seal

NOTE For cable glands used for armoured cable this standard only addresses single-orifice type sealing systems.

Documents
Document Sharing Hub

Full document details: IEC 62444 2010

7 Marking and documentation

7.1 Marking

The cable gland shall be legibly and durably marked in a visible place with the following:

– name, logo or registered mark of the manufacturer or supplier;
– identification of the product.

Where it is not possible to apply the marking directly onto the product, then the marking shall be placed on the smallest supplied package.

Compliance is checked by inspection.

Marking on the product not made by pressing, moulding or engraving is tested in accordance with 7.2.

7.2 Durability and legibility

The test is made by rubbing the marking by hand for 15 s with a piece of cotton cloth soaked with water and again for 15 s with a piece of cotton cloth soaked in petroleum spirit.

NOTE Petroleum spirit is defined as the aliphatic solvent hexane with a content of aromatics of maximum 0,1 % volume, a kauri-butanol value of 29, initial boiling point of 65 °C, a dry point of 69 °C and a specific gravity of approximately 0,68 kg/l.

After this test, the marking shall be legible to normal or corrected vision without additional magnification.

The marking shall remain legible after all the non-destructive tests of this standard. It shall not be possible to remove labels easily and they shall not show curling.

Compliance is checked by inspection.

7.3 Documentation

The manufacturer or supplier shall provide in his literature all information necessary for the proper use and safe installation, such as

– sealing range (maximum and minimum cable dimensions);
– installation torque, if any;
– entry thread length, if any;
– entry thread size and type;
– maximum clearance hole diameter;
– type of cable anchorage and anchorage range, if any;
– impact category;
– correct assembly of the cable gland for use as part of the protective earth conductor or electrical connection;
– degree of protection in accordance with IEC 60529 (IP Code) if higher than IP 54;
– temperature range if different from Subclause 8.5;
– multi-orifice seals if any.

Compliance is checked by inspection.

Documents
Document Sharing Hub

Full document details: IEC 62444 2010

8 Construction

8.1 Those parts of a cable gland that are used for tightening or holding during installation shall be suitable for gripping without damage to the cable gland or cable with commonly available tools or following the manufacturer's instructions. For sizes up to and including M110, the entry thread, if any, shall be constructed in accordance with IEC 60423, Table 1.

Compliance is checked by measurement or manual test.

8.2 All external projecting edges and corners of cable gland components shall be smooth to prevent danger of injury in handling the cable gland.

Compliance is checked by inspection and manual test.

8.3 Cable glands shall be constructed to avoid cable damage when installed in accordance with the manufacturer's or supplier's instructions.

Compliance is checked by inspection.

8.4 Cable glands shall provide a minimum degree of IP54 in accordance with IEC 60529.

Compliance is checked in accordance with 12.1.

8.5 Cable glands shall be suitable for use within a temperature range from at least –20 °C to at least 65 °C.

A temperature exceeding this range can be declared by the manufacturer or supplier.

Compliance is checked in accordance with pre-conditioning in 5.4 and the test in 9.5.

8.6 Metallic parts shall be resistant to or protected against corrosion.

Compliance is checked in accordance with 12.2.

8.7 Cable glands declared in accordance with 6.4.3.2 shall have adequate resistance to ultra-violet light.

Compliance is checked in accordance with 12.3.

9 Mechanical properties

9.1 General

Cable glands declared in accordance with 6.2.1.3 shall provide minimum cable retention in accordance with Table 2 column "Cable retention".

Compliance is checked in accordance with the test in 9.2.

Cable glands declared in accordance with 6.2.1.1 shall provide cable anchorage in accordance with Table 2 "Type A".

Cable glands declared in accordance with 6.2.1.2 shall provide cable anchorage in accordance with Table 2 "Type B".

Compliance is checked in accordance with the test in 9.3.

Documents
Document Sharing Hub

Full document details: IEC 62444 2010

Cable glands declared in accordance with 6.2.2.1 shall provide cable anchorage in accordance with Table 2 "Type C". Cable glands declared in accordance with 6.2.2.2 shall provide cable anchorage in accordance with Table 2 "Type D*".*

Compliance is checked in accordance with the test 9.4.

9.2 Cable retention test

For cable glands classified according to 6.2.1.3 and with a sealing system in accordance with 6.5.1, a test mandrel equivalent to the minimum value of the sealing range of the cable gland as declared by the manufacturer or supplier is fixed to the cable gland.

For cable glands classified according to 6.2.1.3 and with a sealing system in accordance with 6.5.2, a test mandrel equivalent to the minimum value of the sealing range of the smallest orifice of the cable gland is fixed into the smallest orifice of the cable gland and each remaining orifice is plugged with a plug equivalent to the minimum value of its sealing range.

A circular test mandrel is loaded until the pull force is in accordance with the values given in Table 2 column "Cable retention".

For test mandrels which are not circular in shape, i.e. where non-circular cables are being simulated, their cross-sectional area shall be determined, and the diameter of a circular cable of the same cross-sectional area shall be calculated. The test values shall be appropriate to the nearest circular test mandrel size.

For cable glands with sealing systems comprising two or more seals with different sizes, the mandrel shall be stepped appropriately. The test values shall be appropriate to the largest test mandrel diameter.

The test mandrel is marked when unloaded so that any displacement relative to the cable gland can be easily detected.

The load is maintained for 5 min and at the end of this period the displacement shall not exceed 3 mm when unloaded.

The test is repeated using new samples and a test mandrel equivalent to the maximum value of the sealing range of the cable gland as declared by the manufacturer or supplier, with the test value of the relevant maximum cable diameter specified in Table 2.

A typical arrangement for the cable retention test is shown in Figure 1.

Documents
Document Sharing Hub

Full document details: IEC 62444 2010

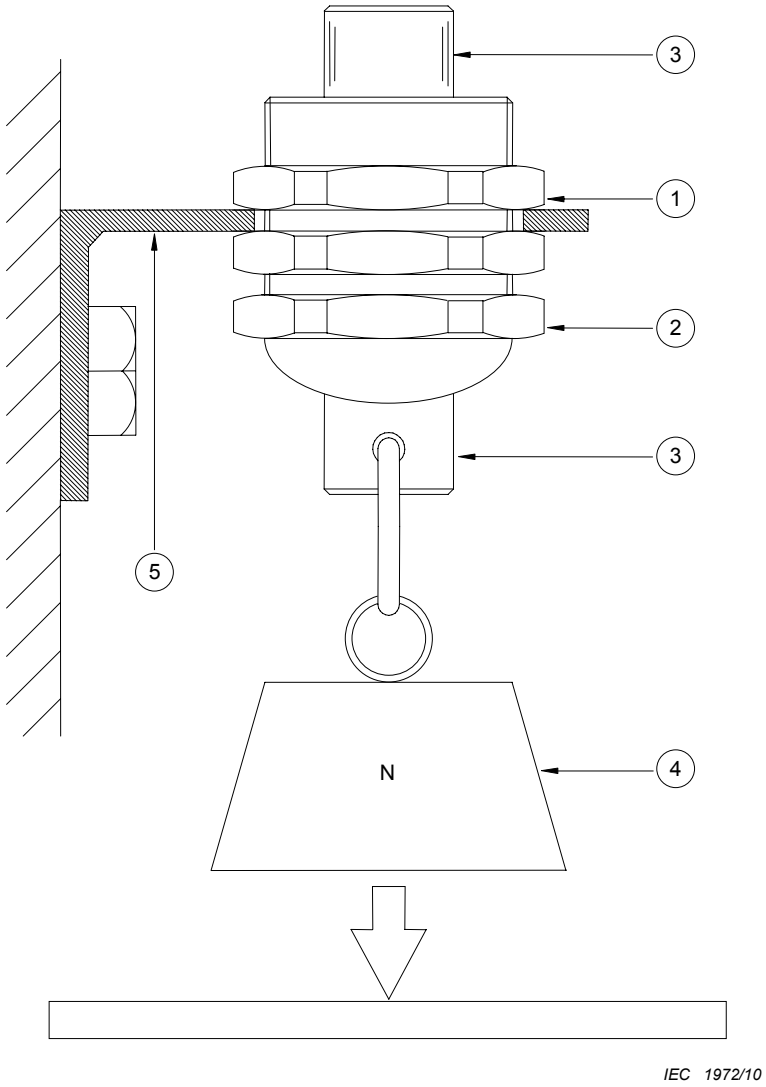

Key

1 locknut
2 cable gland
3 mandrel
4 load
5 support

Figure 1 – Typical arrangement for cable retention test

Documents
Document Sharing Hub
Full document details: IEC 62444 2010

Table 2 – Pull forces for cable retention and cable anchorage

Cable diameter	Cable retention	Cable anchorage for non-armoured cable		Cable anchorage for armoured cable	
		Type A	Type B	Type C	Type D
mm	N	N	N	N	N
Up to 4	5	–	–	-	-
> 4 to 8	10	30	75	75	640
> 8 to 11	15	42	120	120	880
> 11 to 16	20	55	130	130	1 280
> 16 to 23	25	70	140	140	1 840
> 23 to 31	30	80	250	250	2 480
> 31 to 43	45	90	350	350	3 440
> 43 to 55	55	100	400	400	4 400
> 55	70	115	450	450	5 600

9.3 Cable anchorage test for non-armoured cable

Cable glands declared with cable anchorage in accordance with 6.2.1.1 and 6.2.1.2 shall relieve the conductors from strain, including twisting.

Compliance is checked by the following tests.

For cable glands with a sealing system in accordance with 6.5.1, a test mandrel equivalent to the minimum value of the anchorage range of the cable gland as declared by the manufacturer or supplier is fixed to the sample.

For cable glands with a sealing system in accordance with 6.5.2, a test mandrel equivalent to the minimum value of the anchorage range of the smallest orifice of the cable gland is fixed into the smallest orifice of the sample, and each remaining orifice is plugged with a plug equivalent to the minimum value of its sealing range.

The test mandrel is marked when unloaded so that any displacement relative to the cable gland can be easily detected.

The test mandrel is pulled 50 times for a duration of 1 s without jerks in the direction of its axis with the relevant pull force specified in Table 2.

At the end of this period the displacement shall not exceed 2 mm. This measurement is to be carried out after unloading the force from the test mandrel.

A typical arrangement for the cable anchorage pull test is shown in Figure 2.

Documents
Document Sharing Hub

Full document details: IEC 62444 2010

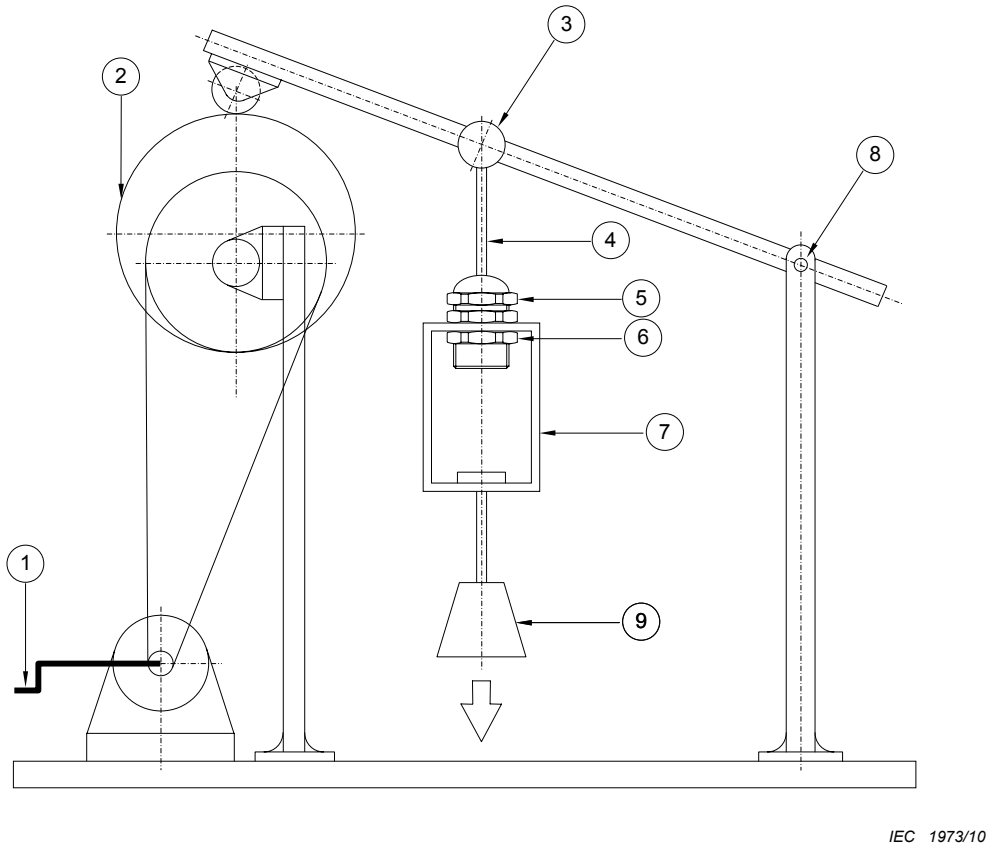

Key

1 crank arm
2 off centre pulley
3 pivot point
4 mandrel
5 cable gland
6 locknut
7 load retaining device
8 fulcrum point
9 load in N

Figure 2 – Typical arrangement for cable anchorage pull test

The sample with the test mandrel is then mounted onto the test arrangement for the cable anchorage twist test as shown in Figure 3.

The test mandrel is marked when unloaded so that any displacement can be easily detected and then is subjected for 1 min to the torque as shown in Table 3.

During this test the test mandrel shall not turn by more than an angle of 45°.

The pull and twist tests shall be repeated using a test mandrel equivalent to the maximum value of the anchorage range of the cable gland as declared by the manufacturer or supplier with the test value of the relevant maximum cable diameter specified in Tables 2 and 3.

Documents
Document Sharing Hub
Full document details: IEC 62444 2010

Table 3 – Torque value for cable anchorage twist test

Cable diameter mm	Torque Nm
> 4 to 8	0,10
> 8 to 11	0,15
> 11 to 16	0,35
> 16 to 23	0,60
> 23 to 31	0,80
> 31 to 43	0,90
> 43 to 55	1,00
> 55	1,20

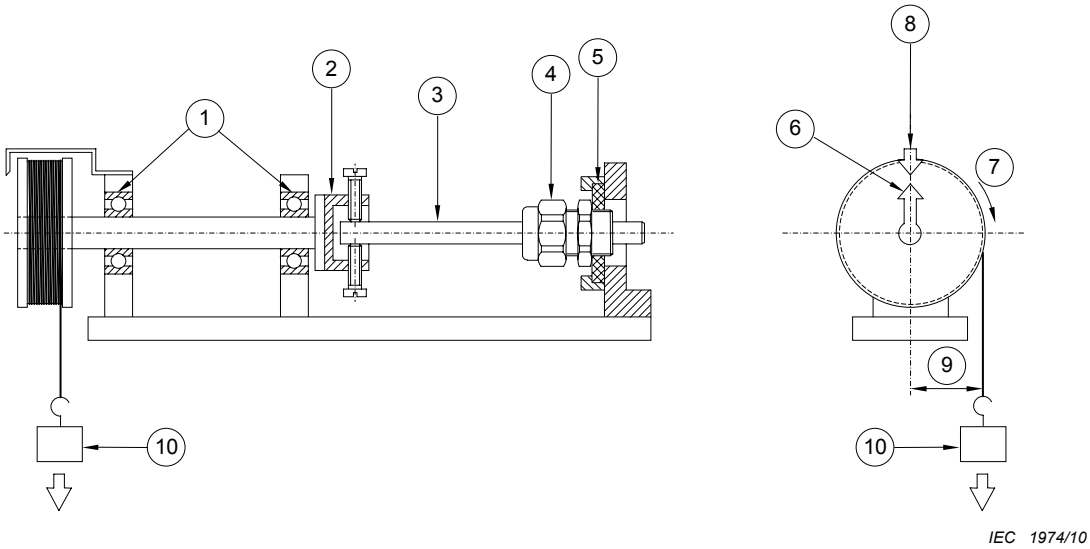

Key

1 bearings enabling easy rotation
2 device for securing test mandrel
3 test mandrel
4 sample
5 sample securing plate (interchangeable)
6 rotating indicator
7 direction of rotation
8 fixed rotating indicator
9 radius
10 load in N

Figure 3 – Typical arrangement for cable anchorage twist test

9.4 Cable anchorage test for armoured cable

Two samples, each consisting of two cable glands, are assembled. In the first sample, the cable glands are fitted, one at each end, to a cable 300 mm long, with the maximum over armour diameter as declared by the manufacturer or supplier. In the second sample the cable glands are fitted, one at each end, to a cable 300 mm long, with the minimum over armour diameter as declared by the manufacturer or supplier.

AVA Documents
Document Sharing Hub
Full document details: IEC 62444 2010