IEC 62496-4-1

Edition 1.0 2019-02

INTERNATIONAL STANDARD

NORME INTERNATIONALE

Optical circuit boards –
Part 4-1: Interface standards – Terminated waveguide OCB assembly using single-row twelve-channel PMT connectors

Cartes a circuits optiques –
Partie 4-1: Normes d'interface – Terminaison d'un ensemble de cartes à circuits optiques à guide d'onde utilisant des connecteurs PMT de douze canaux sur une seule rangée

IEC 62496-4-1:2019-02(en-fr)

Documents
Document Sharing Hub
Full document details: IEC 62496-4-1-2019

THIS PUBLICATION IS COPYRIGHT PROTECTED
Copyright © 2019 IEC, Geneva, Switzerland

All rights reserved. Unless otherwise specified, no part of this publication may be reproduced or utilized in any form or by any means, electronic or mechanical, including photocopying and microfilm, without permission in writing from either IEC or IEC's member National Committee in the country of the requester. If you have any questions about IEC copyright or have an enquiry about obtaining additional rights to this publication, please contact the address below or your local IEC member National Committee for further information.

Droits de reproduction réservés. Sauf indication contraire, aucune partie de cette publication ne peut être reproduite ni utilisée sous quelque forme que ce soit et par aucun procédé, électronique ou mécanique, y compris la photocopie et les microfilms, sans l'accord écrit de l'IEC ou du Comité national de l'IEC du pays du demandeur. Si vous avez des questions sur le copyright de l'IEC ou si vous désirez obtenir des droits supplémentaires sur cette publication, utilisez les coordonnées ci-après ou contactez le Comité national de l'IEC de votre pays de résidence.

IEC Central Office
3, rue de Varembé
CH-1211 Geneva 20
Switzerland

Tel.: +41 22 919 02 11
info@iec.ch
www.iec.ch

About the IEC
The International Electrotechnical Commission (IEC) is the leading global organization that prepares and publishes International Standards for all electrical, electronic and related technologies.

About IEC publications
The technical content of IEC publications is kept under constant review by the IEC. Please make sure that you have the latest edition, a corrigendum or an amendment might have been published.

IEC publications search - webstore.iec.ch/advsearchform
The advanced search enables to find IEC publications by a variety of criteria (reference number, text, technical committee,…). It also gives information on projects, replaced and withdrawn publications.

IEC Just Published - webstore.iec.ch/justpublished
Stay up to date on all new IEC publications. Just Published details all new publications released. Available online and once a month by email.

IEC Customer Service Centre - webstore.iec.ch/csc
If you wish to give us your feedback on this publication or need further assistance, please contact the Customer Service Centre: sales@iec.ch.

Electropedia - www.electropedia.org
The world's leading online dictionary on electrotechnology, containing more than 22 000 terminological entries in English and French, with equivalent terms in 16 additional languages. Also known as the International Electrotechnical Vocabulary (IEV) online.

IEC Glossary - std.iec.ch/glossary
67 000 electrotechnical terminology entries in English and French extracted from the Terms and Definitions clause of IEC publications issued since 2002. Some entries have been collected from earlier publications of IEC TC 37, 77, 86 and CISPR.

A propos de l'IEC
La Commission Electrotechnique Internationale (IEC) est la première organisation mondiale qui élabore et publie des Normes internationales pour tout ce qui a trait à l'électricité, à l'électronique et aux technologies apparentées.

A propos des publications IEC
Le contenu technique des publications IEC est constamment revu. Veuillez vous assurer que vous possédez l'édition la plus récente, un corrigendum ou amendement peut avoir été publié.

Recherche de publications IEC - webstore.iec.ch/advsearchform
La recherche avancée permet de trouver des publications IEC en utilisant différents critères (numéro de référence, texte, comité d'études,…). Elle donne aussi des informations sur les projets et les publications remplacées ou retirées.

IEC Just Published - webstore.iec.ch/justpublished
Restez informé sur les nouvelles publications IEC. Just Published détaille les nouvelles publications parues. Disponible en ligne et une fois par mois par email.

Service Clients - webstore.iec.ch/csc
Si vous désirez nous donner des commentaires sur cette publication ou si vous avez des questions contactez-nous: sales@iec.ch.

Electropedia - www.electropedia.org
Le premier dictionnaire d'électrotechnologie en ligne au monde, avec plus de 22 000 articles terminologiques en anglais et en français, ainsi que les termes équivalents dans 16 langues additionnelles. Egalement appelé Vocabulaire Electrotechnique International (IEV) en ligne.

Glossaire IEC - std.iec.ch/glossary
67 000 entrées terminologiques électrotechniques, en anglais et en français, extraites des articles Termes et Définitions des publications IEC parues depuis 2002. Plus certaines entrées antérieures extraites des publications des CE 37, 77, 86 et CISPR de l'IEC.

Documents
Document Sharing Hub

Full document details: IEC 62496-4-1-2019

IEC 62496-4-1

Edition 1.0 2019-02

INTERNATIONAL STANDARD

NORME INTERNATIONALE

Optical circuit boards –
Part 4-1: Interface standards – Terminated waveguide OCB assembly using single-row twelve-channel PMT connectors

Cartes a circuits optiques –
Partie 4-1: Normes d'interface – Terminaison d'un ensemble de cartes à circuits optiques à guide d'onde utilisant des connecteurs PMT de douze canaux sur une seule rangée

INTERNATIONAL
ELECTROTECHNICAL
COMMISSION

COMMISSION
ELECTROTECHNIQUE
INTERNATIONALE

ICS 33.180.01

ISBN 978-2-8322-6536-9

Warning! Make sure that you obtained this publication from an authorized distributor.
Attention! Veuillez vous assurer que vous avez obtenu cette publication via un distributeur agréé.

AVA Documents
Document Sharing Hub

® Registered trademark of the International Electrotechnical Commission
Marque déposée de la Commission Electrotechnique Internationale

Full document details: IEC 62496-4-1-2019

CONTENTS

FOREWORD 3
1 Scope 5
2 Normative references 5
3 Terms and definitions 5
4 Description 5
5 Interface dimensions of twelve fibres for the assembly 6
Annex A (informative) Dimensions of components for the assembly 9
A.1 PMT connector 9
A.2 Waveguide OCB 10
Bibliography 12

Figure 1 – Interconnection between the assembly and the MT connector 6
Figure 2 – Interface dimensions of twelve cores for the assembly 7
Figure 3 – Interface view of twelve cores for the assembly 7
Figure A.1 – Components of the PMT connector 9
Figure A.2 – Expanded view of end-face for the twelve-core PMT body 10
Figure A.3 – Positions of twelve cores of the waveguide OCB 11

Table 1 – Interface dimensions of twelve cores for the assembly 8
Table 2 – Positions of cores of twelve cores for the assembly 8
Table A.1 – Interface dimensions of the twelve-core PMT body 10
Table A.2 – Positions of twelve-fibre core OCB 11

Documents
Document Sharing Hub

Full document details: IEC 62496-4-1-2019

INTERNATIONAL ELECTROTECHNICAL COMMISSION

OPTICAL CIRCUIT BOARDS –

Part 4-1: Interface standards – Terminated waveguide OCB assembly using single-row twelve-channel PMT connectors

FOREWORD

1) The International Electrotechnical Commission (IEC) is a worldwide organization for standardization comprising all national electrotechnical committees (IEC National Committees). The object of IEC is to promote international co-operation on all questions concerning standardization in the electrical and electronic fields. To this end and in addition to other activities, IEC publishes International Standards, Technical Specifications, Technical Reports, Publicly Available Specifications (PAS) and Guides (hereafter referred to as "IEC Publication(s)"). Their preparation is entrusted to technical committees; any IEC National Committee interested in the subject dealt with may participate in this preparatory work. International, governmental and non-governmental organizations liaising with the IEC also participate in this preparation. IEC collaborates closely with the International Organization for Standardization (ISO) in accordance with conditions determined by agreement between the two organizations.
2) The formal decisions or agreements of IEC on technical matters express, as nearly as possible, an international consensus of opinion on the relevant subjects since each technical committee has representation from all interested IEC National Committees.
3) IEC Publications have the form of recommendations for international use and are accepted by IEC National Committees in that sense. While all reasonable efforts are made to ensure that the technical content of IEC Publications is accurate, IEC cannot be held responsible for the way in which they are used or for any misinterpretation by any end user.
4) In order to promote international uniformity, IEC National Committees undertake to apply IEC Publications transparently to the maximum extent possible in their national and regional publications. Any divergence between any IEC Publication and the corresponding national or regional publication shall be clearly indicated in the latter.
5) IEC itself does not provide any attestation of conformity. Independent certification bodies provide conformity assessment services and, in some areas, access to IEC marks of conformity. IEC is not responsible for any services carried out by independent certification bodies.
6) All users should ensure that they have the latest edition of this publication.
7) No liability shall attach to IEC or its directors, employees, servants or agents including individual experts and members of its technical committees and IEC National Committees for any personal injury, property damage or other damage of any nature whatsoever, whether direct or indirect, or for costs (including legal fees) and expenses arising out of the publication, use of, or reliance upon, this IEC Publication or any other IEC Publications.
8) Attention is drawn to the Normative references cited in this publication. Use of the referenced publications is indispensable for the correct application of this publication.
9) Attention is drawn to the possibility that some of the elements of this IEC Publication may be the subject of patent rights. IEC shall not be held responsible for identifying any or all such patent rights.

International Standard IEC 62496-4-1 has been prepared by IEC technical committee 86: Fibre optics.

The text of this International Standard is based on the following documents:

FDIS	Report on voting
86/547/FDIS	86/550/RVD

Full information on the voting for the approval of this International Standard can be found in the report on voting indicated in the above table.

This document has been drafted in accordance with the ISO/IEC Directives, Part 2.

Documents
Document Sharing Hub

Full document details: IEC 62496-4-1-2019

A list of all parts of the IEC 62496 series, under the general title, *Optical circuit boards*, can be found on the IEC website.

The committee has decided that the contents of this document will remain unchanged until the stability date indicated on the IEC website under "http://webstore.iec.ch" in the data related to the specific document. At this date, the document will be

- reconfirmed,
- withdrawn,
- replaced by a revised edition, or
- amended.

Documents
Document Sharing Hub

Full document details: IEC 62496-4-1-2019

OPTICAL CIRCUIT BOARDS –

Part 4-1: Interface standards – Terminated waveguide OCB assembly using single-row twelve-channel PMT connectors

1 Scope

This part of IEC 62496-4 defines the standard interface dimensions for a terminated waveguide optical circuit board (OCB) assembly (referred to simply as assembly) using single-row twelve-channel polymer waveguides for a PMT connector and a waveguide OCB that can be interconnected with a terminated MT ferrule.

2 Normative references

There are no normative references in this document.

3 Terms and definitions

No terms and definitions are listed in this document.

ISO and IEC maintain terminological databases for use in standardization at the following addresses:

- IEC Electropedia: available at http://www.electropedia.org/
- ISO Online browsing platform: available at http://www.iso.org/obp

4 Description

The assembly comprises a PMT connector and a twelve-core waveguide OCB. The PMT connector is a rectangular connector having the same outer dimensions as the type MT connector specified in IEC 61754-5. The PMT connector is aligned using alignment pins and is normally secured by the use of a latching spring and mates with the type MT connector as shown in Figure 1. Details of the PMT connector are shown in Annex A. The waveguide OCB comprises a planar light-guide consisting of a core and cladding material appropriate to transmit light as the operational wavelengths require, the light-guide being supported on a substrate. Preferably, the substrate will be flexible in order to accommodate compliance to the MT connector. The cores of the waveguide OCB are aligned with the optical fibres of the MT connector after mating using two guide pins and a clamp spring.

Documents
Document Sharing Hub

Full document details: IEC 62496-4-1-2019

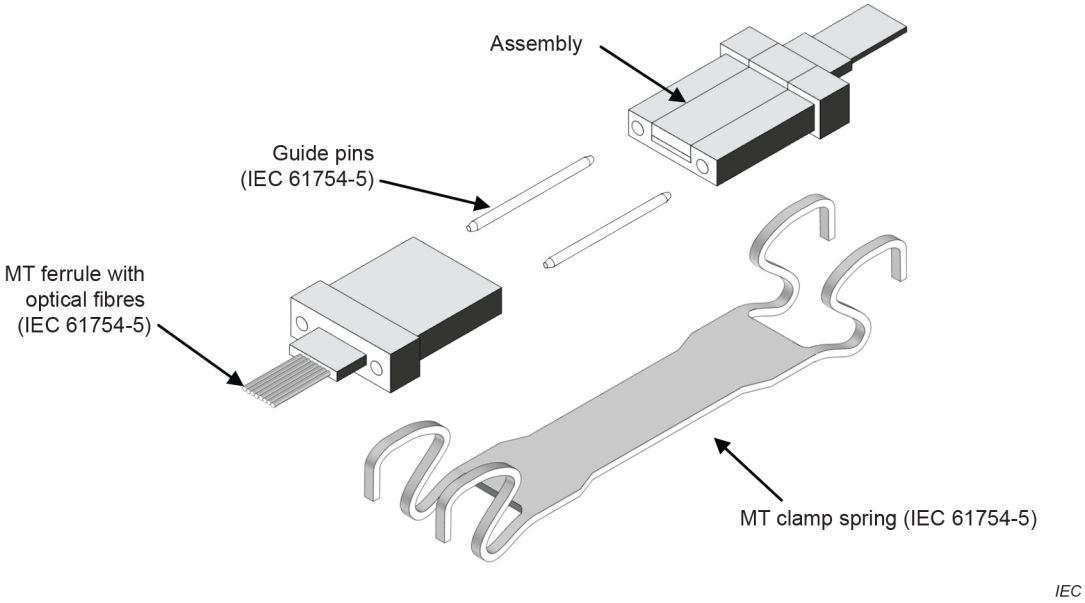

Figure 1 – Interconnection between the assembly and the MT connector

5 Interface dimensions of twelve fibres for the assembly

Figures 2 and 3 and Table 1 show the interface dimensions for the assembly. Table 2 shows the positions of the cores for the assembly. The origin point of the assembly is the midpoint of the centres of two guide-holes.

Documents
Document Sharing Hub
Full document details: IEC 62496-4-1-2019

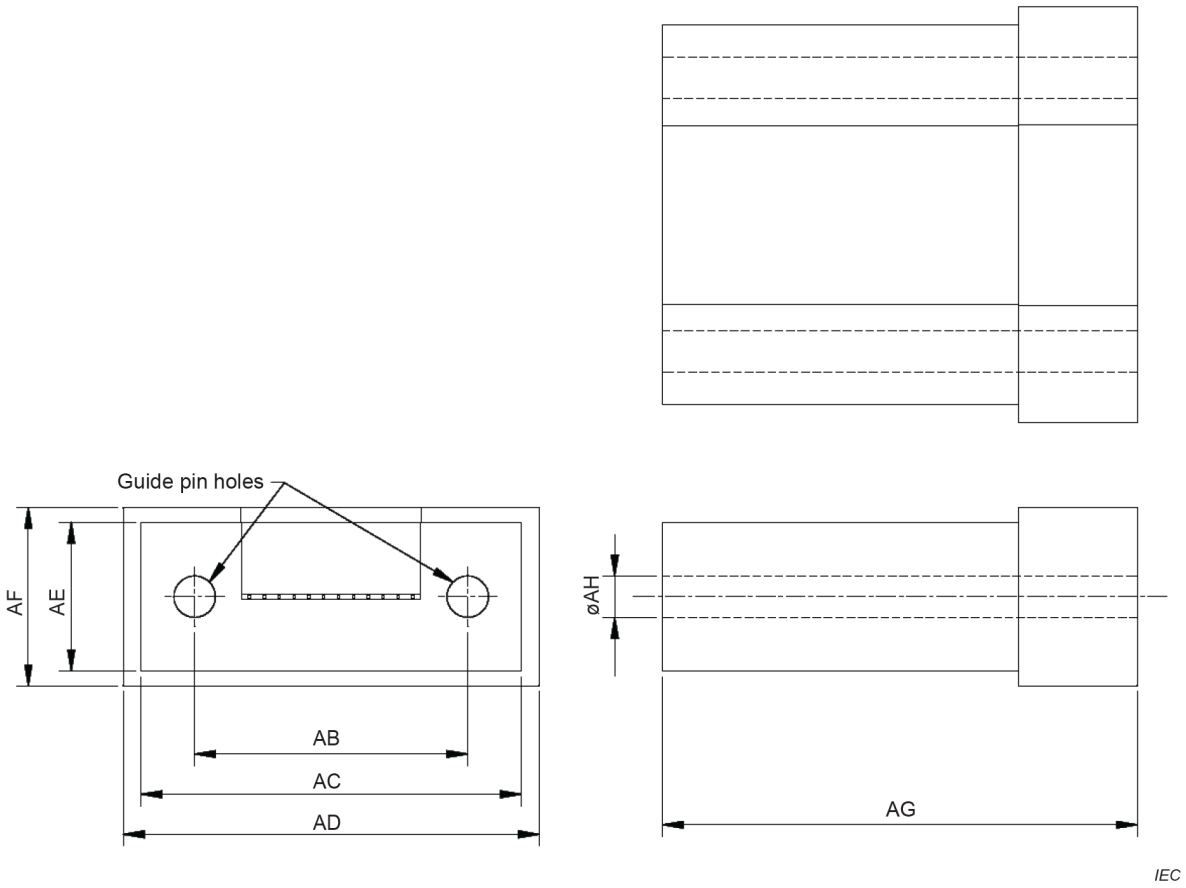

Figure 2 – Interface dimensions of twelve cores for the assembly

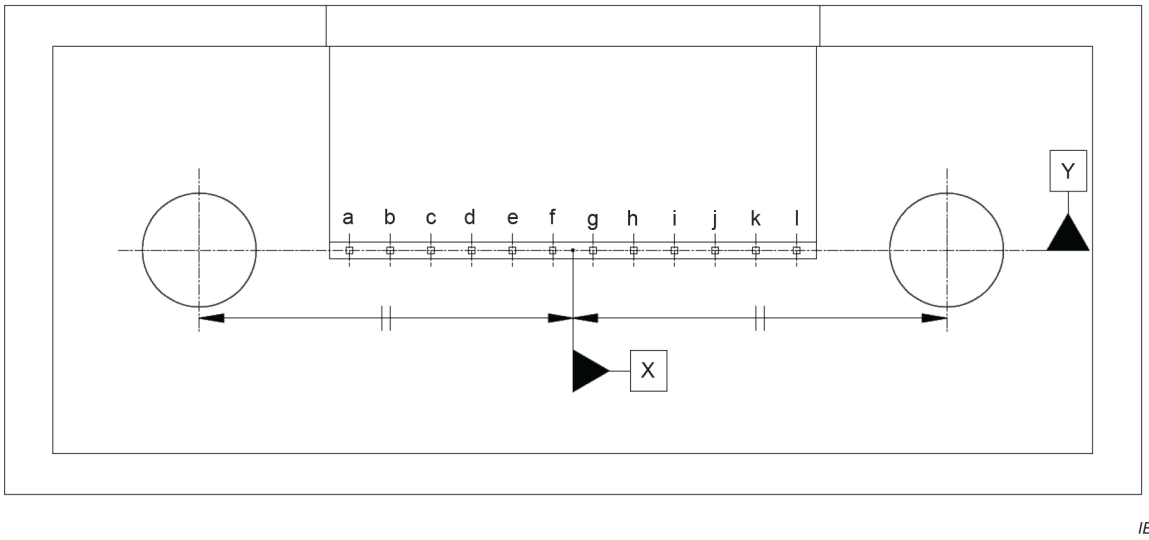

Figure 3 – Interface view of twelve cores for the assembly

Documents
Document Sharing Hub
Full document details: IEC 62496-4-1-2019