IEC 62561-1

Edition 2.0 2017-03

INTERNATIONAL STANDARD

NORME INTERNATIONALE

Lightning protection system components (LPSC) – Part 1: Requirements for connection components

Composants des systemes de protection contre la foudre (CSPF) – Partie 1: Exigences pour les composants de connexion

IEC 62561-1:2017-03(en-fr)

Documents
Document Sharing Hub
Full document details: IEC 62561-1 2017

THIS PUBLICATION IS COPYRIGHT PROTECTED

Copyright © 2017 IEC, Geneva, Switzerland

All rights reserved. Unless otherwise specified, no part of this publication may be reproduced or utilized in any form or by any means, electronic or mechanical, including photocopying and microfilm, without permission in writing from either IEC or IEC's member National Committee in the country of the requester. If you have any questions about IEC copyright or have an enquiry about obtaining additional rights to this publication, please contact the address below or your local IEC member National Committee for further information.

Droits de reproduction réservés. Sauf indication contraire, aucune partie de cette publication ne peut être reproduite ni utilisée sous quelque forme que ce soit et par aucun procédé, électronique ou mécanique, y compris la photocopie et les microfilms, sans l'accord écrit de l'IEC ou du Comité national de l'IEC du pays du demandeur. Si vous avez des questions sur le copyright de l'IEC ou si vous désirez obtenir des droits supplémentaires sur cette publication, utilisez les coordonnées ci-après ou contactez le Comité national de l'IEC de votre pays de résidence.

IEC Central Office
3, rue de Varembé
CH-1211 Geneva 20
Switzerland

Tel.: +41 22 919 02 11
Fax: +41 22 919 03 00
info@iec.ch
www.iec.ch

About the IEC
The International Electrotechnical Commission (IEC) is the leading global organization that prepares and publishes International Standards for all electrical, electronic and related technologies.

About IEC publications
The technical content of IEC publications is kept under constant review by the IEC. Please make sure that you have the latest edition, a corrigenda or an amendment might have been published.

IEC Catalogue - webstore.iec.ch/catalogue
The stand-alone application for consulting the entire bibliographical information on IEC International Standards, Technical Specifications, Technical Reports and other documents. Available for PC, Mac OS, Android Tablets and iPad.

IEC publications search - www.iec.ch/searchpub
The advanced search enables to find IEC publications by a variety of criteria (reference number, text, technical committee,…). It also gives information on projects, replaced and withdrawn publications.

IEC Just Published - webstore.iec.ch/justpublished
Stay up to date on all new IEC publications. Just Published details all new publications released. Available online and also once a month by email.

Electropedia - www.electropedia.org
The world's leading online dictionary of electronic and electrical terms containing 20 000 terms and definitions in English and French, with equivalent terms in 16 additional languages. Also known as the International Electrotechnical Vocabulary (IEV) online.

IEC Glossary - std.iec.ch/glossary
65 000 electrotechnical terminology entries in English and French extracted from the Terms and Definitions clause of IEC publications issued since 2002. Some entries have been collected from earlier publications of IEC TC 37, 77, 86 and CISPR.

IEC Customer Service Centre - webstore.iec.ch/csc
If you wish to give us your feedback on this publication or need further assistance, please contact the Customer Service Centre: csc@iec.ch.

A propos de l'IEC
La Commission Electrotechnique Internationale (IEC) est la première organisation mondiale qui élabore et publie des Normes internationales pour tout ce qui a trait à l'électricité, à l'électronique et aux technologies apparentées.

A propos des publications IEC
Le contenu technique des publications IEC est constamment revu. Veuillez vous assurer que vous possédez l'édition la plus récente, un corrigendum ou amendement peut avoir été publié.

Catalogue IEC - webstore.iec.ch/catalogue
Application autonome pour consulter tous les renseignements bibliographiques sur les Normes internationales, Spécifications techniques, Rapports techniques et autres documents de l'IEC. Disponible pour PC, Mac OS, tablettes Android et iPad.

Recherche de publications IEC - www.iec.ch/searchpub

La recherche avancée permet de trouver des publications IEC en utilisant différents critères (numéro de référence, texte, comité d'études,…). Elle donne aussi des informations sur les projets et les publications remplacées ou retirées.

IEC Just Published - webstore.iec.ch/justpublished

Restez informé sur les nouvelles publications IEC. Just Published détaille les nouvelles publications parues. Disponible en ligne et aussi une fois par mois par email.

Electropedia - www.electropedia.org

Le premier dictionnaire en ligne de termes électroniques et électriques. Il contient 20 000 termes et définitions en anglais et en français, ainsi que les termes équivalents dans 16 langues additionnelles. Egalement appelé Vocabulaire Electrotechnique International (IEV) en ligne.

Glossaire IEC - std.iec.ch/glossary
65 000 entrées terminologiques électrotechniques, en anglais et en français, extraites des articles Termes et Définitions des publications IEC parues depuis 2002. Plus certaines entrées antérieures extraites des publications des CE 37, 77, 86 et CISPR de l'IEC.

Service Clients - webstore.iec.ch/csc

Si vous désirez nous donner des commentaires sur cette publication ou si vous avez des questions contactez-nous: csc@iec.ch.

Documents
Document Sharing Hub

Full document details: IEC 62561-1 2017

IEC 62561-1

Edition 2.0 2017-03

INTERNATIONAL STANDARD

NORME INTERNATIONALE

Lightning protection system components (LPSC) – Part 1: Requirements for connection components

Composants des systemes de protection contre la foudre (CSPF) – Partie 1: Exigences pour les composants de connexion

INTERNATIONAL
ELECTROTECHNICAL
COMMISSION

COMMISSION
ELECTROTECHNIQUE
INTERNATIONALE

ICS 29.020; 91.120.40

ISBN 978-2-8322-4050-2

Warning! Make sure that you obtained this publication from an authorized distributor.
Attention! Veuillez vous assurer que vous avez obtenu cette publication via un distributeur agréé.

® Registered trademark of the International Electrotechnical Commission
Marque déposée de la Commission Electrotechnique Internationale

Documents
Document Sharing Hub

Full document details: IEC 62561-1 2017

CONTENTS

FOREWORD 4
INTRODUCTION 6
1 Scope 7
2 Normative references 7
3 Terms and definitions 7
4 Classification 9
4.1 According to the ability to withstand lightning current 9
4.2 According to the installation location 9
4.3 According to the mechanical behaviour of connection components 9
4.4 According to whether or not a connection is permanent 9
5 Requirements 9
5.1 General 9
5.2 Installation instructions 9
5.3 Lightning current carrying capability 9
5.4 Static mechanical stress 10
5.5 Permanent connection 10
5.6 Non-permanent connection 10
5.7 Dismantling of test joints 10
5.8 Damage to conductors and metal installations 10
5.9 Reliable connection 10
5.10 Terminals of bonding bars 10
5.11 Marking 10
6 Tests 11
6.1 General condition on tests 11
6.2 Preparation of the specimen 11
6.3 Conditioning/ageing 15
6.3.1 Connection components not embedded in concrete 15
6.3.2 Connection components embedded in concrete 15
6.4 Electrical test 16
6.5 Static mechanical test 17
6.5.1 General 17
6.5.2 Test procedure 17
6.6 Marking test 17
7 Electromagnetic compatibility (EMC) 17
8 Structure and content of the test report 18
8.1 General 18
8.2 Report identification 18
8.3 Specimen description 18
8.4 Conductor 18
8.5 Standards and references 18
8.6 Test procedure 19
8.7 Testing equipment description 19
8.8 Measuring instruments description 19
8.9 Results and parameters recorded 19
8.10 Statement of pass/fail 19

AVA Documents
Document Sharing Hub

Annex A (normative) Summary of the requirements and corresponding tests 20
Annex B (informative) Typical connection configurations for various LPSCs 21
Annex C (normative) Flow chart of tests for connection components 22
Annex D (normative) Conditioning/ageing for connection components 24
D.1 General 24
D.2 Salt mist treatment 24
D.3 Humid sulphurous atmosphere treatment 24
D.4 Ammonia atmosphere treatment 24
Bibliography 25

Figure 1 – Basic arrangement of specimen with cross-connection component 12
Figure 2 – Basic arrangement of specimen with parallel connection component 13
Figure 3 – Basic arrangement of specimen with bridging component 14
Figure 4 – Basic arrangement of specimen with equipotential bonding bar 15
Figure 5 – Basic arrangement for contact measurement of expansion piece 17
Figure B.1 – Typical arrangements for various LPSCs 21
Figure C.1 – Flow chart of tests for connection components 23

Table 1 – Lightning impulse current (I_{imp}) parameters 16
Table A.1 – Requirements and corresponding tests 20

Documents
Document Sharing Hub
Full document details: IEC 62561-1 2017

INTERNATIONAL ELECTROTECHNICAL COMMISSION

LIGHTNING PROTECTION SYSTEM COMPONENTS (LPSC) –

Part 1: Requirements for connection components

FOREWORD

1) The International Electrotechnical Commission (IEC) is a worldwide organization for standardization comprising all national electrotechnical committees (IEC National Committees). The object of IEC is to promote international co-operation on all questions concerning standardization in the electrical and electronic fields. To this end and in addition to other activities, IEC publishes International Standards, Technical Specifications, Technical Reports, Publicly Available Specifications (PAS) and Guides (hereafter referred to as "IEC Publication(s)"). Their preparation is entrusted to technical committees; any IEC National Committee interested in the subject dealt with may participate in this preparatory work. International, governmental and non-governmental organizations liaising with the IEC also participate in this preparation. IEC collaborates closely with the International Organization for Standardization (ISO) in accordance with conditions determined by agreement between the two organizations.
2) The formal decisions or agreements of IEC on technical matters express, as nearly as possible, an international consensus of opinion on the relevant subjects since each technical committee has representation from all interested IEC National Committees.
3) IEC Publications have the form of recommendations for international use and are accepted by IEC National Committees in that sense. While all reasonable efforts are made to ensure that the technical content of IEC Publications is accurate, IEC cannot be held responsible for the way in which they are used or for any misinterpretation by any end user.
4) In order to promote international uniformity, IEC National Committees undertake to apply IEC Publications transparently to the maximum extent possible in their national and regional publications. Any divergence between any IEC Publication and the corresponding national or regional publication shall be clearly indicated in the latter.
5) IEC itself does not provide any attestation of conformity. Independent certification bodies provide conformity assessment services and, in some areas, access to IEC marks of conformity. IEC is not responsible for any services carried out by independent certification bodies.
6) All users should ensure that they have the latest edition of this publication.
7) No liability shall attach to IEC or its directors, employees, servants or agents including individual experts and members of its technical committees and IEC National Committees for any personal injury, property damage or other damage of any nature whatsoever, whether direct or indirect, or for costs (including legal fees) and expenses arising out of the publication, use of, or reliance upon, this IEC Publication or any other IEC Publications.
8) Attention is drawn to the Normative references cited in this publication. Use of the referenced publications is indispensable for the correct application of this publication.
9) Attention is drawn to the possibility that some of the elements of this IEC Publication may be the subject of patent rights. IEC shall not be held responsible for identifying any or all such patent rights.

International Standard IEC 62561-1 has been prepared by IEC technical committee 81: Lightning protection.

This second edition cancels and replaces the first edition, published in 2012. This edition constitutes a technical revision.

This edition includes the following significant technical changes with respect to the previous edition:

a) classification of connection components in permanent and non-permanent connection;
b) requirements and corresponding tests for permanent connection components such as exothermic, brazing, welding, crimping, seaming;
c) flow chart of tests for connection components.

Documents
Document Sharing Hub

Full document details: IEC 62561-1 2017

The text of this standard is based on the following documents:

FDIS	Report on voting
81/551/FDIS	81/559/RVD

Full information on the voting for the approval of this International Standard can be found in the report on voting indicated in the above table.

This document has been drafted in accordance with the ISO/IEC Directives, Part 2.

A list of all parts in the IEC 62561 series, published under the general title *Lightning protection system components (LPSC),* can be found on the IEC website.

The committee has decided that the contents of this document will remain unchanged until the stability date indicated on the IEC website under "http://webstore.iec.ch" in the data related to the specific document. At this date, the document will be

- reconfirmed,
- withdrawn,
- replaced by a revised edition, or
- amended.

Documents
Document Sharing Hub

Full document details: IEC 62561-1 2017

INTRODUCTION

This part of IEC 62561 deals with the requirements and tests for lightning protection system components (LPSC) used for the installation of a lightning protection system (LPS) designed and implemented according to the IEC 62305 series.

Documents
Document Sharing Hub

Full document details: IEC 62561-1 2017

LIGHTNING PROTECTION SYSTEM COMPONENTS (LPSC) –

Part 1: Requirements for connection components

1 Scope

This part of IEC 62561 specifies the requirements and tests for metallic connection components that form part of a lightning protection system (LPS). Typically, these can be connectors, clamps, bonding and bridging components, expansion pieces and test joints.

For the purposes of this document the following connection types are considered as connection components: exothermic, brazing, welding, clamping, crimping, seaming, screwing or bolting.

Testing of components for an explosive atmosphere is not covered by this document.

2 Normative references

The following documents are referred to in the text in such a way that some or all of their content constitutes requirements of this document. For dated references, only the edition cited applies. For undated references, the latest edition of the referenced document (including any amendments) applies.

IEC 60068-2-52:1996, *Environmental testing – Part 2-52: Tests – Test Kb: Salt mist, cyclic (sodium chloride solution)*

IEC 62561-2, *Lightning protection system components (LPSC) – Part 2: Requirements for conductors and earth electrodes*

ISO 6957:1988, *Copper alloys – Ammonia test for stress corrosion resistance*

ISO 6988:1985, *Metallic and other non-organic coatings – Sulphur dioxide test with general condensation of moisture*

3 Terms and definitions

For the purposes of this document, the following terms and definitions apply.

ISO and IEC maintain terminological databases for use in standardization at the following addresses:

- IEC Electropedia: available at http://www.electropedia.org/
- ISO Online browsing platform: available at http://www.iso.org/obp

3.1
connection component
part of an external LPS which is used for the connection of conductors to each other or to metallic installations

Note 1 to entry: Connection components include connectors, clamps, bridging components, expansion pieces and test joints.

Documents
Document Sharing Hub

Full document details: IEC 62561-1 2017

3.2
metal installation
extended metal items in the structure to be protected which may form a path for lightning current, such as pipes, staircases, elevator guide rails, ventilation, heating and air conditioning ducts, and interconnected reinforcing steel

3.3
bridging component
connection component for the connection of metal installations

3.4
expansion piece
connection component designed to compensate for changes in length in conductors and/or metal installations caused by temperature changes

3.5
connector
connection component to interconnect two or more conductors

3.6
clamp
connection component for the connection of conductors to metal installations

3.7
pipe clamp
clamp for the connection of conductors to metal pipes

3.8
test joint
joint designed to facilitate electrical testing and measurement of LPS components

3.9
connection range
minimum to maximum range for which a specific connection component is designed to be used

3.10
bonding bar
metal bar on which metal installations, external conductive parts, electric power and telecommunication lines and other cables can be connected to an LPS

3.11
type test
test required to be made before supplying a type of material covered by IEC 62561-1 on a general commercial basis, in order to demonstrate satisfactory performance characteristics to meet the intended application

Note 1 to entry: These tests are of such a nature that, after they have been made, they need not be repeated unless changes are made to the accessory materials, design or type of manufacturing process which might change the performance characteristics.

3.12
permanent connection
connection that cannot or is not intended to be dismantled

3.13
non-permanent connection
connection that can or is intended to be dismantled

Documents
Document Sharing Hub

Full document details: IEC 62561-1 2017

4 Classification

4.1 According to the ability to withstand lightning current

a) class H for heavy duty;

b) class N for normal duty.

The selection of classes H and N should be performed by the manufacturer in accordance with the test parameters identified in Table 1.

4.2 According to the installation location

a) general use;

b) embedded in concrete.

4.3 According to the mechanical behaviour of connection components

a) intended to withstand a static mechanical load;

b) not intended to withstand a static mechanical load.

The manufacturer's declaration of ability to withstand a static load shall determine the need or otherwise to carry out the static mechanical test as identified in 6.5.

4.4 According to whether or not a connection is permanent

a) permanent connection such as exothermic process, brazing, welding, crimping, seaming;

b) non-permanent connection such as screwing or bolting.

5 Requirements

5.1 General

Connection components shall be designed in such a manner that when they are installed in accordance with the manufacturer's instructions their performance shall be reliable, stable and safe to persons and surrounding equipment.

NOTE A summary of the requirements and their corresponding tests is given in Annex A.

5.2 Installation instructions

The manufacturer of the connection components shall provide at least the following information:

a) the classification of the component;

b) the recommended tightening torque;

c) the range of conductor sizes and materials;

d) the connection configuration.

Compliance is checked by inspection.

5.3 Lightning current carrying capability

Connection components shall have sufficient lightning current carrying capability.

Compliance is checked in accordance with 6.4 following the manufacturer's declaration for the class (H or N) of the connection components in accordance with 4.1.

Documents
Document Sharing Hub

Full document details: IEC 62561-1 2017

5.4 Static mechanical stress

Connection components shall have a sufficient withstand capability against static mechanical stresses.

Equipotential bonding bars are excluded from this requirement.

Compliance is checked in accordance with 6.5.

5.5 Permanent connection

Where exothermic process, brazing, welding, crimping or seaming are used as connection, the design shall be such that the conductor and/or the metal installation is always securely bonded.

Compliance is checked by inspection and in accordance with 6.4 a), b), e).

5.6 Non-permanent connection

Where screws and/or nuts are used as the clamping connection, the design shall be such that the conductor and/or the metal installation is always securely fastened by the screw and/or nut application.

Compliance is checked by inspection and in accordance with 6.4,a), b), c), d).

5.7 Dismantling of test joints

It shall be possible to dismantle the test joints after lightning current stress.

Compliance is checked by inspection and in accordance with 6.4, a), b), c), d).

5.8 Damage to conductors and metal installations

Connection components shall be so designed that they connect the conductors and/or the metal installations without undue damage to the conductors, the metal installations and/or the connection components.

Compliance is checked by inspection.

5.9 Reliable connection

Connection components shall guarantee safe connection within the connection range declared by the manufacturer.

Compliance is checked by inspection and in accordance with 6.4.

5.10 Terminals of bonding bars

The input terminals of bonding bars used for lightning protection installations shall have a diameter of connection equal to or greater than 6 mm.

Compliance is checked by inspection.

5.11 Marking

The connection components shall be marked at least with the following:

a) manufacturer’s or responsible vendor’s name or trade mark;

Documents
Document Sharing Hub

Full document details: IEC 62561-1 2017

b) identifying symbol (picture, product number, etc.);

c) classification, i.e. class N or H.

Where this proves to be impractical the marking in accordance with b) and c) may be given on the smallest packing unit label or on the accompanying documentation.

The marking shall be durable and legible.

NOTE Marking can be applied for example by moulding, pressing, engraving, printing adhesive labels or water slide transfers.

Compliance is checked in accordance with 6.6.

6 Tests

6.1 General condition on tests

The tests in accordance with this document are type tests (see 3.11).

- Unless otherwise specified, tests are carried out with the specimens assembled and installed as in normal use according to the manufacturer's or supplier's installation instructions with the recommended conductor materials, sizes and tightening torques. If the connection component is suitable for various conductors' materials, then it shall be tested on each material combination.
- All tests are carried out on new specimens.
- Unless otherwise specified, three specimens are subjected to the tests and the requirements are satisfied if all the tests are met.
- If only one of the specimens does not satisfy a test due to an assembly or a manufacturing fault, that test and any preceding one which may have influenced the results of the test shall be repeated and also the tests which follow shall be carried out in the required sequence on another full set of specimens, all of which shall comply with the requirements.
- The electrical test shall be carried out in the order given, after conditioning/ageing of the arrangement of the specimen in accordance with 6.3.

The applicant, when submitting the sets of specimens, may also submit an additional set of specimens which may be necessary, should one specimen fail. The testing station will then, without further request, test the additional set of specimens and will reject it only if a further failure occurs. If the additional set of specimens is not submitted at the same time, the failure of one specimen will entail rejection.

6.2 Preparation of the specimen

If not otherwise specified by the manufacturer, the conductors and the specimens shall be cleaned by using a suitable degreasing agent followed by cleaning in demineralized water and drying. They shall then be assembled in accordance with the manufacturer's instructions, for example with the recommended conductors and tightening torques.

The connection component shall be tested in all the connection configurations declared by the manufacturer. Typical connection configurations for various LPSCs are illustrated in Annex B.

Any connection components accommodating a range of conductors with a variation on any dimension equal to or less than 2 mm shall be tested using the minimum conductor size recommended. If the range of conductor sizes is greater than 2 mm, it shall be tested using the minimum and maximum size of conductors recommended.

Documents
Document Sharing Hub
Full document details: IEC 62561-1 2017

The basic arrangement of the specimen with cross-connection component, parallel connection component, bridging component and equipotential bonding bar is shown in Figures 1, 2, 3 and 4, respectively. Terminals of bonding bars are only tested if the connection size is equal to or greater than 16 mm^2. The test is carried out using the smallest conductor size within the range of the terminal with a minimum of 16 mm^2 conductor. Typical arrangements for various LPSCs are shown in Annex B.

Dimension in millimetres

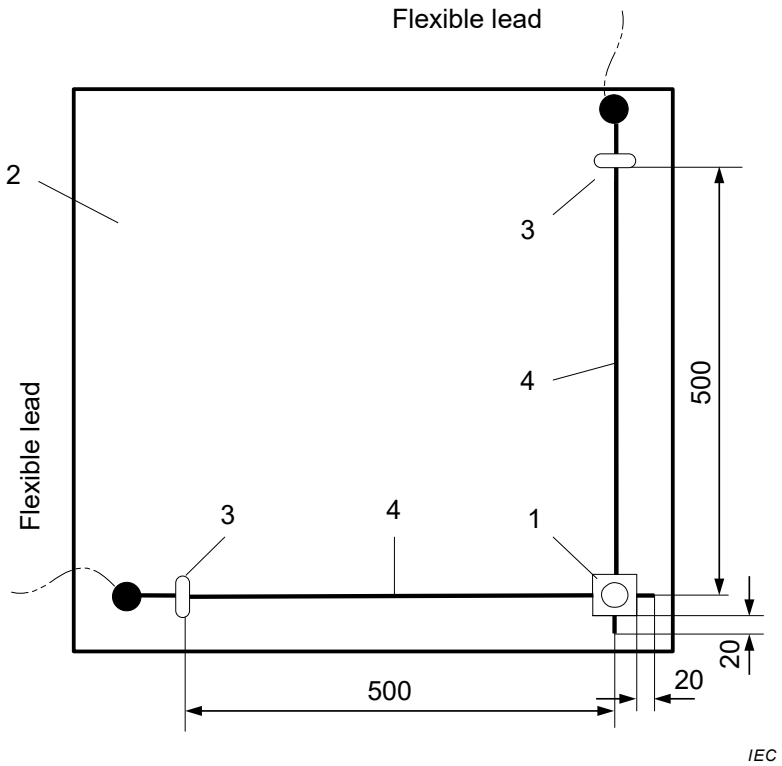

Key

1 Cross-connection component

2 Plate made of insulating material

3 Rigid fastener

4 Conductor and/or metal installation in accordance with Annex C

Figure 1 – Basic arrangement of specimen with cross-connection component

Documents
Document Sharing Hub
Full document details: IEC 62561-1 2017

Dimension in millimetres

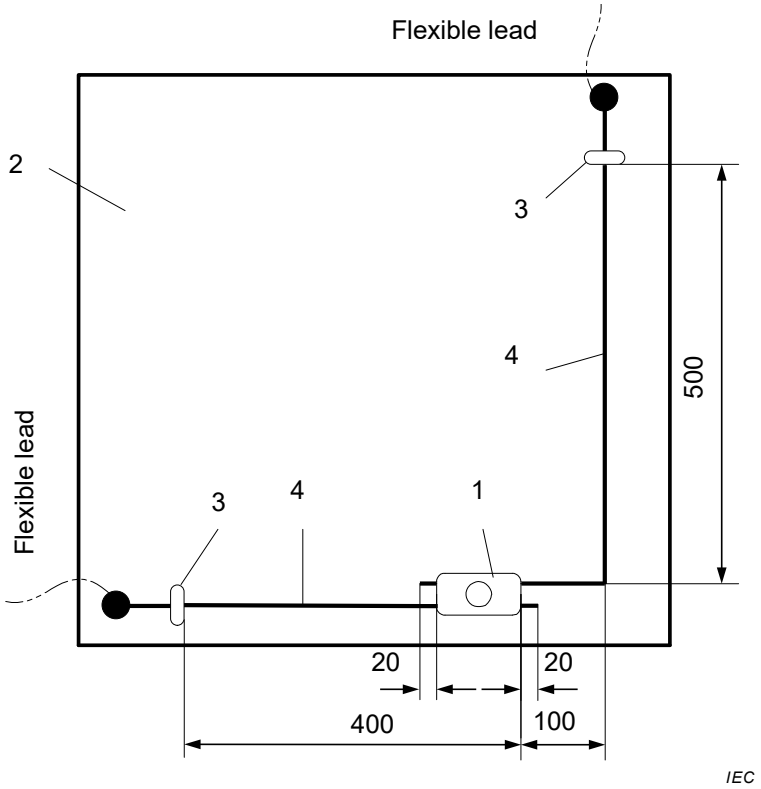

Key

1 Parallel connection component

2 Plate made of insulating material

3 Rigid fastener

4 Conductor and/or metal installation in accordance with Annex C

Figure 2 – Basic arrangement of specimen with parallel connection component

Documents
Document Sharing Hub
Full document details: IEC 62561-1 2017

Dimension in millimetres

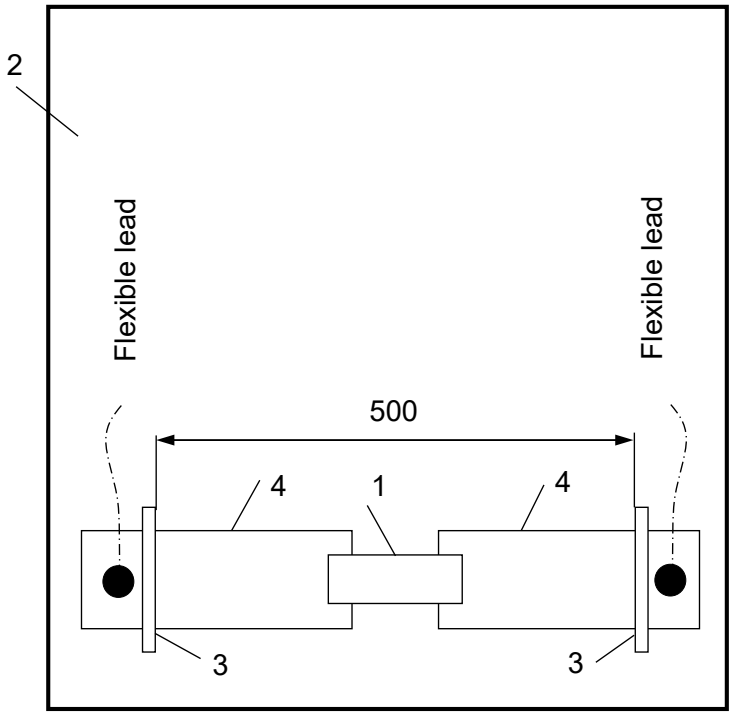

IEC

Key

1 Bridging component

2 Plate made of insulating material

3 Rigid fastener

4 Metal installation in accordance with Annex C

Figure 3 – Basic arrangement of specimen with bridging component

Documents
Document Sharing Hub
Full document details: IEC 62561-1 2017

Dimension in millimetres

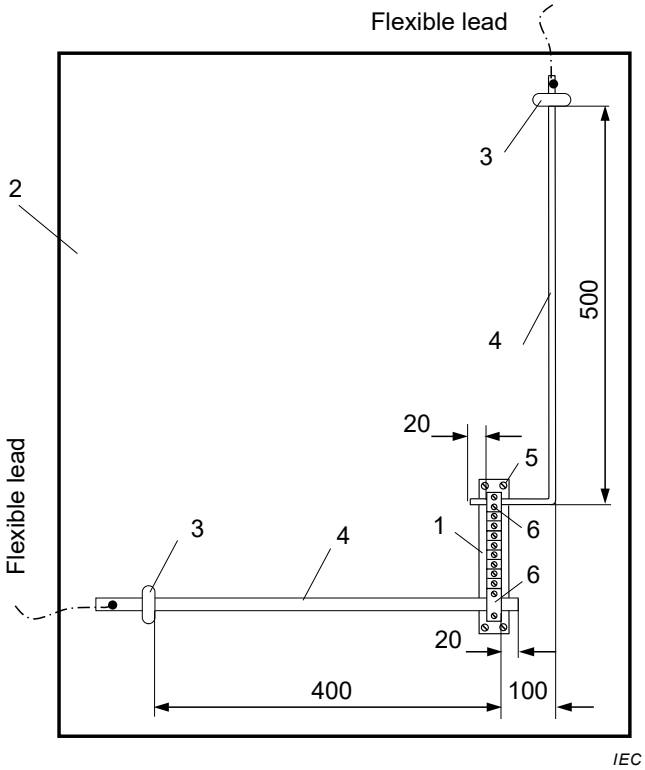

Key

1 Equipotential bonding bar

2 Plate made of insulating material

3 Rigid fastener

4 Conductor

5 Fixing points of equipotential bonding bar

6 Connection to be tested

Figure 4 – Basic arrangement of specimen with equipotential bonding bar

6.3 Conditioning/ageing

6.3.1 Connection components not embedded in concrete

Following the manufacturer's declaration in accordance with 4.2, the arrangement of the specimen shall be subjected to a conditioning/ageing in accordance with Annex D.

The manufacturer shall provide proof of the copper content of any part of the assembly made from an alloy having a copper content ≥ 80 %.

After the treatment, the arrangement is fixed on an insulated plate, taking care to avoid any damage to the specimen due to handling.

6.3.2 Connection components embedded in concrete

This treatment is not necessary for connection components designed to be completely embedded in concrete. Connection components designed to be partially embedded in concrete shall be subjected to the conditioning/ageing in accordance with 6.3.

Bonding bars designed for indoor applications only are tested without conditioning/ageing.

Documents
Document Sharing Hub
Full document details: IEC 62561-1 2017