IEC 62561-3

Edition 2.0 2017-06

INTERNATIONAL STANDARD

NORME INTERNATIONALE

Lightning protection system components (LPSC) – Part 3: Requirements for isolating spark gaps (ISG)

Composants des systèmes de protection contre la foudre (CSPF) – Partie 3: Exigences pour les éclateurs d'isolement

IEC 62561-3:2017-06(en-fr)

Documents
Document Sharing Hub

Full document details: IEC 62561-3 2017

THIS PUBLICATION IS COPYRIGHT PROTECTED
Copyright © 2017 IEC, Geneva, Switzerland

All rights reserved. Unless otherwise specified, no part of this publication may be reproduced or utilized in any form or by any means, electronic or mechanical, including photocopying and microfilm, without permission in writing from either IEC or IEC's member National Committee in the country of the requester. If you have any questions about IEC copyright or have an enquiry about obtaining additional rights to this publication, please contact the address below or your local IEC member National Committee for further information.

Droits de reproduction réservés. Sauf indication contraire, aucune partie de cette publication ne peut être reproduite ni utilisée sous quelque forme que ce soit et par aucun procédé, électronique ou mécanique, y compris la photocopie et les microfilms, sans l'accord écrit de l'IEC ou du Comité national de l'IEC du pays du demandeur. Si vous avez des questions sur le copyright de l'IEC ou si vous désirez obtenir des droits supplémentaires sur cette publication, utilisez les coordonnées ci-après ou contactez le Comité national de l'IEC de votre pays de résidence.

IEC Central Office
3, rue de Varembé
CH-1211 Geneva 20
Switzerland

Tel.: +41 22 919 02 11
info@iec.ch
www.iec.ch

About the IEC
The International Electrotechnical Commission (IEC) is the leading global organization that prepares and publishes International Standards for all electrical, electronic and related technologies.

About IEC publications
The technical content of IEC publications is kept under constant review by the IEC. Please make sure that you have the latest edition, a corrigenda or an amendment might have been published.

IEC Catalogue - webstore.iec.ch/catalogue
The stand-alone application for consulting the entire bibliographical information on IEC International Standards, Technical Specifications, Technical Reports and other documents. Available for PC, Mac OS, Android Tablets and iPad.

IEC publications search - webstore.iec.ch/advsearchform
The advanced search enables to find IEC publications by a variety of criteria (reference number, text, technical committee,…). It also gives information on projects, replaced and withdrawn publications.

IEC Just Published - webstore.iec.ch/justpublished
Stay up to date on all new IEC publications. Just Published details all new publications released. Available online and also once a month by email.

Electropedia - www.electropedia.org
The world's leading online dictionary of electronic and electrical terms containing 21 000 terms and definitions in English and French, with equivalent terms in 16 additional languages. Also known as the International Electrotechnical Vocabulary (IEV) online.

IEC Glossary - std.iec.ch/glossary
67 000 electrotechnical terminology entries in English and French extracted from the Terms and Definitions clause of IEC publications issued since 2002. Some entries have been collected from earlier publications of IEC TC 37, 77, 86 and CISPR.

IEC Customer Service Centre - webstore.iec.ch/csc
If you wish to give us your feedback on this publication or need further assistance, please contact the Customer Service Centre: sales@iec.ch.

A propos de l'IEC
La Commission Electrotechnique Internationale (IEC) est la première organisation mondiale qui élabore et publie des Normes internationales pour tout ce qui a trait à l'électricité, à l'électronique et aux technologies apparentées.

A propos des publications IEC
Le contenu technique des publications IEC est constamment revu. Veuillez vous assurer que vous possédez l'édition la plus récente, un corrigendum ou amendement peut avoir été publié.

Catalogue IEC - webstore.iec.ch/catalogue
Application autonome pour consulter tous les renseignements bibliographiques sur les Normes internationales, Spécifications techniques, Rapports techniques et autres documents de l'IEC. Disponible pour PC, Mac OS, tablettes Android et iPad.

Recherche de publications IEC - webstore.iec.ch/advsearchform

La recherche avancée permet de trouver des publications IEC en utilisant différents critères (numéro de référence, texte, comité d'études,…). Elle donne aussi des informations sur les projets et les publications remplacées ou retirées.

IEC Just Published - webstore.iec.ch/justpublished

Restez informé sur les nouvelles publications IEC. Just Published détaille les nouvelles publications parues. Disponible en ligne et aussi une fois par mois par email.

Electropedia - www.electropedia.org

Le premier dictionnaire en ligne de termes électroniques et électriques. Il contient 21 000 termes et définitions en anglais et en français, ainsi que les termes équivalents dans 16 langues additionnelles. Egalement appelé Vocabulaire Electrotechnique International (IEV) en ligne.

Glossaire IEC - std.iec.ch/glossary
67 000 entrées terminologiques électrotechniques, en anglais et en français, extraites des articles Termes et Définitions des publications IEC parues depuis 2002. Plus certaines entrées antérieures extraites des publications des CE 37, 77, 86 et CISPR de l'IEC.

Service Clients - webstore.iec.ch/csc

Si vous désirez nous donner des commentaires sur cette publication ou si vous avez des questions contactez-nous: sales@iec.ch.

Documents
Document Sharing Hub

Full document details: IEC 62561-3 2017

IEC 62561-3

Edition 2.0 2017-06

INTERNATIONAL STANDARD

NORME INTERNATIONALE

Lightning protection system components (LPSC) – Part 3: Requirements for isolating spark gaps (ISG)

Composants des systèmes de protection contre la foudre (CSPF) – Partie 3: Exigences pour les éclateurs d'isolement

INTERNATIONAL
ELECTROTECHNICAL
COMMISSION

COMMISSION
ELECTROTECHNIQUE
INTERNATIONALE

ICS 91.120.40

ISBN 978-2-8322-6202-3

Warning! Make sure that you obtained this publication from an authorized distributor.
Attention! Veuillez vous assurer que vous avez obtenu cette publication via un distributeur agréé.

® Registered trademark of the International Electrotechnical Commission
Marque déposée de la Commission Electrotechnique Internationale

AVA Documents
Document Sharing Hub

Full document details: IEC 62561-3 2017

CONTENTS

CONTENTS 2
FOREWORD 4
INTRODUCTION 6
1 Scope 7
2 Normative references 7
3 Terms and definitions 8
4 Classification 9
4.1 According to ISGs capability to withstand lightning current 9
4.2 According to ISGs location installation 9
5 Requirements 10
5.1 General 10
5.2 Environmental requirements 10
5.3 Installation instructions 10
5.4 Lightning current carrying capability 10
5.5 Rated impulse sparkover voltage 10
5.6 Rated withstand voltage 10
5.6.1 Rated DC withstand voltage 10
5.6.2 Rated power frequency withstand voltage 10
5.7 Isolation resistance 10
5.8 Marking 11
5.9 UV (ultraviolet) resistance 11
6 Tests 11
6.1 General conditions for tests 11
6.2 UV (ultraviolet) light test 12
6.3 Resistance tests to corrosion 12
6.4 Mechanical tests 12
6.5 Electrical tests 14
6.5.1 Isolation resistance 14
6.5.2 Withstand voltage 14
6.5.3 Rated impulse sparkover voltage 15
6.5.4 Lightning current 15
6.6 Installation instructions 16
6.6.1 General conditions for tests 16
6.6.2 Acceptance criteria 16
6.7 Marking test 16
6.7.1 General conditions for tests 16
6.7.2 Acceptance criteria 16
7 Electromagnetic compatibility (EMC) 16
8 Structure and content of the test report 16
8.1 General 16
8.2 Report identification 17
8.3 Specimen description 17
8.4 Standards and references 17
8.5 Test procedure 17
8.6 Testing equipment description 18
8.7 Measuring instruments description 18

AVA Documents
Document Sharing Hub
Full document details: IEC 62561-3 2017

8.8 Results and parameters recorded 18
8.9 Statement of pass/fail 18
Annex A (normative) Flow chart of tests 19
Annex B (normative) Environmental test for isolating spark gaps 21
B.1 General 21
B.2 Salt mist treatment 21
B.3 Humid sulphurous atmosphere treatment 21
B.4 Ammonia atmosphere treatment 21
Annex C (normative) Environmental test for outdoor isolating spark gaps – Resistance to ultraviolet light 22
C.1 General 22
C.2 The tests 22
C.3 First alternative test to C.2 22
C.4 Second alternative test to C.2 22
Bibliography 23

Figure 1 – Pendulum hammer test apparatus 13
Figure A.1 – Flow chart of the sequence of tests for ISGs 20

Table 1 – Lightning impulse current (I_{imp}) parameters 15

Documents
Document Sharing Hub
Full document details: IEC 62561-3 2017

INTERNATIONAL ELECTROTECHNICAL COMMISSION

LIGHTNING PROTECTION SYSTEM COMPONENTS (LPSC) –

Part 3: Requirements for isolating spark gaps (ISG)

FOREWORD

1) The International Electrotechnical Commission (IEC) is a worldwide organization for standardization comprising all national electrotechnical committees (IEC National Committees). The object of IEC is to promote international co-operation on all questions concerning standardization in the electrical and electronic fields. To this end and in addition to other activities, IEC publishes International Standards, Technical Specifications, Technical Reports, Publicly Available Specifications (PAS) and Guides (hereafter referred to as "IEC Publication(s)"). Their preparation is entrusted to technical committees; any IEC National Committee interested in the subject dealt with may participate in this preparatory work. International, governmental and non-governmental organizations liaising with the IEC also participate in this preparation. IEC collaborates closely with the International Organization for Standardization (ISO) in accordance with conditions determined by agreement between the two organizations.
2) The formal decisions or agreements of IEC on technical matters express, as nearly as possible, an international consensus of opinion on the relevant subjects since each technical committee has representation from all interested IEC National Committees.
3) IEC Publications have the form of recommendations for international use and are accepted by IEC National Committees in that sense. While all reasonable efforts are made to ensure that the technical content of IEC Publications is accurate, IEC cannot be held responsible for the way in which they are used or for any misinterpretation by any end user.
4) In order to promote international uniformity, IEC National Committees undertake to apply IEC Publications transparently to the maximum extent possible in their national and regional publications. Any divergence between any IEC Publication and the corresponding national or regional publication shall be clearly indicated in the latter.
5) IEC itself does not provide any attestation of conformity. Independent certification bodies provide conformity assessment services and, in some areas, access to IEC marks of conformity. IEC is not responsible for any services carried out by independent certification bodies.
6) All users should ensure that they have the latest edition of this publication.
7) No liability shall attach to IEC or its directors, employees, servants or agents including individual experts and members of its technical committees and IEC National Committees for any personal injury, property damage or other damage of any nature whatsoever, whether direct or indirect, or for costs (including legal fees) and expenses arising out of the publication, use of, or reliance upon, this IEC Publication or any other IEC Publications.
8) Attention is drawn to the Normative references cited in this publication. Use of the referenced publications is indispensable for the correct application of this publication.
9) Attention is drawn to the possibility that some of the elements of this IEC Publication may be the subject of patent rights. IEC shall not be held responsible for identifying any or all such patent rights.

International Standard IEC 62561-3 has been prepared by IEC technical committee 81: Lightning protection.

This bilingual version (2018-11) corresponds to the monolingual English version, published in 2017-06.

This second edition cancels and replaces the first edition, published in 2012. This edition constitutes a technical revision.

This edition includes the following significant technical changes with respect to the previous edition.

a) a new classification has been added related to ISGs location installation;
b) an updated flow chart of tests has been developed.

Documents
Document Sharing Hub

Full document details: IEC 62561-3 2017

The text of this International Standard is based on the following documents:

FDIS	Report on voting
81/561/FDIS	81/566/RVD

Full information on the voting for the approval of this International Standard can be found in the report on voting indicated in the above table.

The French version of this document has not been voted upon.

This document has been drafted in accordance with the ISO/IEC Directives, Part 2.

A list of all parts in the IEC 62561 series, published under the general title *Lightning protection system components (LPSC)*, can be found on the IEC website.

The committee has decided that the contents of this document will remain unchanged until the stability date indicated on the IEC website under "http://webstore.iec.ch" in the data related to the specific document. At this date, the document will be

- reconfirmed,
- withdrawn,
- replaced by a revised edition, or
- amended.

Documents
Document Sharing Hub

Full document details: IEC 62561-3 2017

INTRODUCTION

This part of IEC 62561 deals with the requirements and tests for lightning protection system components (LPSC), specifically isolating spark gaps (ISG) used for the installation of a lightning protection system (LPS) designed and implemented according to the IEC 62305 series.

Documents
Document Sharing Hub

Full document details: IEC 62561-3 2017

LIGHTNING PROTECTION SYSTEM COMPONENTS (LPSC) –

Part 3: Requirements for isolating spark gaps (ISG)

1 Scope

This part of IEC 62561 specifies the requirements and tests for isolating spark gaps (ISG) for lightning protection systems.

ISGs can be used to indirectly bond a lightning protection system to other nearby metalwork where a direct bond is not permissible for functional reasons.

Typical applications include the connection to

- earth-termination systems of power installations,
- earth-termination systems of telecommunication systems,
- auxiliary earth electrodes of voltage-operated, earth fault circuit breakers,
- rail earth electrode of power and DC railways,
- measuring earth electrodes for laboratories,
- installations with cathodic protection and stray current systems,
- service entry masts for low-voltage overhead cables,
- bypassing insulated flanges and insulated couplings of pipelines.

This does not cover applications where follow currents occur.

NOTE Lightning protection system components (LPSC) can also be suitable for use in hazardous conditions such as fire and explosive atmosphere. Due regard will be taken of the extra requirements necessary for the components to be installed in such conditions.

2 Normative references

The following documents are referred to in the text in such a way that some or all of their content constitutes requirements of this document. For dated references, only the edition cited applies. For undated references, the latest edition of the referenced document (including any amendments) applies.

IEC 60068-2-52:1996, *Environmental testing – Part 2-52: Tests – Test Kb: Salt mist, cyclic (sodium chloride solution)*[1]

IEC 60068-2-75:1997, *Environmental testing – Part 2-75: Tests – Test Eh: Hammer tests*[2]

---

1 2nd edition (1996). A 3rd edition IEC 60068-2-52: *Environmental testing – Part 2-52: Tests – Test Kb: Salt mist, cyclic (sodium chloride solution)* is under preparation. Stage at the time of publication: IEC PRVC 60068-2-52:2017.

2 1st edition (1997). This 1st edition was replaced in 2014 by a 2nd edition IEC 60068-2-75:2014, *Environmental testing – Part 2-75: Tests – Test Eh: Hammer tests.*

AVA Documents
Document Sharing Hub

Full document details: IEC 62561-3 2017

ISO 4892-2:2006, *Plastics – Methods of exposure to laboratory light sources – Part 2: Xenon-arc lamps*[3]

IEC 62561-1, *Lightning protection system components (LPSC) – Part 1: Requirements for connection components*

ISO 4892-3:2006, *Plastics – Methods of exposure to laboratory light sources – Part 3: Fluorescent UV lamps*[4]

ISO 4892-4, *Plastics – Methods of exposure to laboratory light sources – Part 4: Open-flame carbon-arc lamps*

ISO 6957:1988, *Copper alloys – Ammonia test for stress corrosion resistance*

ISO 6988:1985, *Metallic and other non-organic coatings – Sulphur dioxide test with general condensation of moisture*

3 Terms and definitions

For the purposes of this document, the following terms and definitions apply.

ISO and IEC maintain terminological databases for use in standardization at the following addresses:

- IEC Electropedia: available at http://www.electropedia.org/
- ISO Online browsing platform: available at http://www.iso.org/obp

3.1
isolating spark gap
ISG
component with discharge distance for isolating electrically conductive installation sections

Note 1 to entry: In the event of a lightning strike, the isolated sections are temporarily connected conductively as the result of response to the discharge.

3.2
sparkover voltage
maximum voltage value before disruptive discharge between the electrodes of the ISG

3.3
withstand voltage
value of the test voltage to be applied under specified conditions in a withstand test, during which a specified number of disruptive discharges is tolerated

3.4
power frequency withstand voltage
r.m.s value of a sinusoidal power frequency voltage that the ISG can withstand

3.5
DC withstand voltage
value of a DC voltage that the ISG can withstand

---

3 2nd edition (2006). This 2nd edition was replaced in 2013 by a 3rd edition ISO 4892-2:2013, *Plastics – Methods of exposure to laboratory light sources – Part 2: Xenon-arc lamps.*

4 2nd edition (2006). This 2nd edition was replaced in 2016 by a 3rd edition: ISO 4892-3: 2016, *Plastics – Methods of exposure to laboratory light sources – Part 3: Fluorescent UV lamps*.

AVA Documents
Document Sharing Hub

3.6
rated withstand voltage
value of a withstand voltage declared by the manufacturer to characterize the isolating behavior of an ISG

3.7
rated power frequency withstand voltage
$U_{\text{W AC}}$
value of a power frequency withstand voltage declared by the manufacturer to characterize the isolating behavior of an ISG

3.8
rated DC withstand voltage
$U_{\text{W DC}}$
value of a DC withstand voltage declared by the manufacturer to characterize the isolating behavior of an ISG

3.9
impulse sparkover voltage
impulse voltage of the waveshape 1,2/50 to classify the sparkover behavior of the ISG

3.10
rated impulse sparkover voltage
U_{imp}
manufacturer's declaration of the ISG sparkover voltage

3.11
isolation resistance
ohmic resistance of the ISG between the active parts

3.12
lightning impulse current
I_{imp}
impulse current that classifies an ISG

Note 1 to entry: Five parameters are to be considered: the peak value, the charge, the duration, the specific energy and the rate of rise of the impulse current.

4 Classification

4.1 According to ISGs capability to withstand lightning current

The following classes apply, as per Table 1:

a) class H for heavy duty;
b) class N for normal duty;
c) class 1L for light duty;
d) class 2L for light duty;
e) class 3L for light duty.

4.2 According to ISGs location installation

The following classes apply:

a) indoor installation;
b) outdoor installation.

Documents
Document Sharing Hub
Full document details: IEC 62561-3 2017

5 Requirements

5.1 General

ISGs shall be designed in such a manner that when they are installed in accordance with the manufacturer's instructions, their performance shall be reliable, stable and safe to persons and surrounding equipment.

5.2 Environmental requirements

ISGs shall be designed in such way that they operate satisfactorily under the environmental conditions given by the normal service conditions. Outdoor ISGs shall be contained in a weather shield of glass-glazed ceramic, or other acceptable material, that is resistant to UV (ultraviolet) light, corrosion and erosion.

Compliance is checked by testing. In accordance with 6.2 and 6.3.

5.3 Installation instructions

The manufacturer of the ISG shall provide adequate instructions in their literature to ensure that the installer of the ISG can select and install them in a suitable and safe manner.

Compliance is checked by review as per 6.6.

5.4 Lightning current carrying capability

ISGs shall have sufficient lightning current carrying capability.

Compliance is checked in accordance with Clause 6 following the manufacturer's declaration for the class of the ISG in accordance with Clause 4.

5.5 Rated impulse sparkover voltage

The ISG shall always spark over at this value during the tests.

The ISG may experience some variation of sparkover characteristics before and after the lightning current test. This shall be included in the rated impulse sparkover voltage defined by the manufacturer.

5.6 Rated withstand voltage

5.6.1 Rated DC withstand voltage

The ISG shall never spark over at this value during the tests even after performing the lightning current test.

5.6.2 Rated power frequency withstand voltage

The ISG shall never spark over at this value during the tests even after performing the lightning current test.

5.7 Isolation resistance

Before the lightning current test the isolation resistance shall be higher than 500 kΩ and after the lightning current test isolation resistance shall not be lower than 500 kΩ.

Compliance is checked in accordance with 6.5.1.

Documents
Document Sharing Hub

Full document details: IEC 62561-3 2017

5.8 Marking

All products complying with this document shall be marked at least with the following:

a) manufacturer's or responsible vendor's name or trade mark or identifying symbol;

b) part number;

c) the classification in accordance with Clause 4.

If the marking in accordance with b) is not practical it may be given on the smallest packaging unit. The marking shall be durable and legible.

Compliance is checked in accordance with 6.7.

NOTE Marking can be applied for example by moulding, pressing, engraving, printing adhesive labels or water slide transfers.

5.9 UV (ultraviolet) resistance

ISG housings for outdoor installation shall be made of UV resistant material.

Compliance is checked by tests as per 6.2.

6 Tests

6.1 General conditions for tests

The tests in accordance with this document are type tests and performed in a sequence according to Annex A.

These tests are of such a nature that, after they have been performed, they need not be repeated unless changes are made to the materials, design or type of manufacturing process, which might change the performance characteristics of the product.

a) Unless otherwise specified, tests are carried out with the specimens assembled and installed as in normal use according to the manufacturer's or supplier's instructions.

b) Unless otherwise specified, three specimens are subjected to the tests and the requirements are satisfied if all the tests are met.

c) If only one of the specimens does not satisfy a test due to an assembly or a manufacturing fault, that test and any preceding one which may have influenced the results of the test shall be repeated and also the tests which follow shall be carried out in the required sequence on another full set of specimens, all of which shall comply with the requirements.

d) If the ISG has an integral connection component part with its design, it shall be subjected to the testing regime of IEC 62561-1 using the appropriate lightning current given in Table 1 of this document.

The applicant, when submitting a set of specimens, may also submit an additional set of specimens which may be necessary should one specimen fail. The testing laboratory will then, without further request, test the additional set of specimens and will reject the sets only if a further failure occurs. If the additional set of specimens is not submitted at the same time, the failure of one specimen will entail rejection.

Prior to the testing of the ISG and clamp assembly, suitable protection measures should be employed to ensure that the housing is not exposed to the conditioning treatment.

Documents
Document Sharing Hub

Full document details: IEC 62561-3 2017

6.2 UV (ultraviolet) light test

This test is necessary for ISGs designed to be installed outdoors or in specific environments.

ISG housings for outdoor application shall withstand UV light effects.

One set of three new specimens shall be assembled and mounted rigidly on an insulating plate (e.g. brick, polytetrafluoroethylene (PTFE)) in accordance with the manufacturer's installation instructions.

The specimens shall be subjected to an environmental test consisting of an ultraviolet light test as specified in Annex C.

The specimens are deemed to have passed this part of the test if there are no signs of disintegration and no cracks visible to normal or corrected vision.

Ensure that the surface of the mounting plate is suitable to resist UV radiation.

6.3 Resistance tests to corrosion

This test is necessary for ISGs having metallic parts designed to be installed outdoors or in specific environments.

The specimens used in and complying with the test in 6.2, shall be subjected to corrosion tests as per Annex B.

After the parts have been dried during 10 min in a drying oven at a temperature of 100 ºC ± 5 ºC, they shall not present any trace of rust on surfaces.

Traces of rust on the edges or a yellowish stain removed by rubbing are not taken into account. White rust, patina and other surface oxidations are not considered as corrosive deterioration.

6.4 Mechanical tests

All specimens complying with 6.2 and 6.3 shall be stressed three times by mechanical impacts.

The impacts are carried out on the accessible parts of the ISG, which may be mechanically stressed accidentally.

The specimens are assembled under their normal operating conditions specified in the manufacturer's documentation.

The ISG is mounted on a pendulum hammer test apparatus according to IEC 60068-2-75:1997, Clause 4, as shown in Figure 1. The striking element material shall be polyamide as per IEC 60068-2-75:1997, Table 1, and its mass shall be 200 g as per IEC 60068-2-75:1997, Table 2.

Documents
Document Sharing Hub

Full document details: IEC 62561-3 2017

Dimensions in millimetres

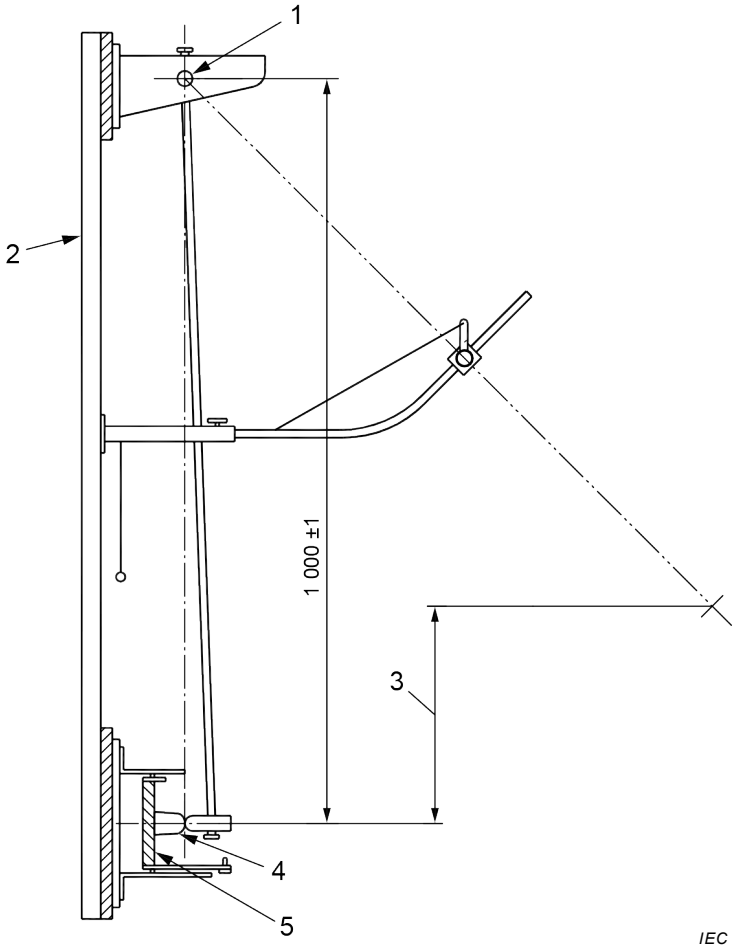

Key

1 pendulum

2 frame

3 height of fall

4 specimen

5 mounting fixture

Figure 1 – Pendulum hammer test apparatus

The hammer shall fall from a height of 200 mm so that one impact on each side is applied, as far as possible perpendicular to the length of the arrangement. The drop height is the vertical distance between the position of the point of control, when the pendulum is released, and the position of this point at the time of the impact.

The point of control is located on the surface of the striking part where the line passing through the point of intersection of the axes of the steel tube of the pendulum and the part of striking, perpendicular to the plane crossing the two axes, comes into contact with the surface.

The impacts are not applied to the connectors.

NOTE In theory, the centre of gravity of the striking part should be the point of control. As, in practice, it is difficult to determine the centre of gravity, the point of control has been chosen as described above.

Documents
Document Sharing Hub
Full document details: IEC 62561-3 2017