# IEC 62561-4

Edition 3.0 2023-10

# INTERNATIONAL STANDARD

# NORME INTERNATIONALE

## Lightning protection system components (LPSC) – Part 4: Requirements for conductor fasteners

## Composants des systèmes de protection contre la foudre (CSPF) – Partie 4: Exigences pour les fixations de conducteurs

IEC 62561-4:2023-10(en-fr)

Documents
Document Sharing Hub

Full document details: IEC 62561-4-2023

**THIS PUBLICATION IS COPYRIGHT PROTECTED**
**Copyright © 2023 IEC, Geneva, Switzerland**

All rights reserved. Unless otherwise specified, no part of this publication may be reproduced or utilized in any form or by any means, electronic or mechanical, including photocopying and microfilm, without permission in writing from either IEC or IEC's member National Committee in the country of the requester. If you have any questions about IEC copyright or have an enquiry about obtaining additional rights to this publication, please contact the address below or your local IEC member National Committee for further information.

Droits de reproduction réservés. Sauf indication contraire, aucune partie de cette publication ne peut être reproduite ni utilisée sous quelque forme que ce soit et par aucun procédé, électronique ou mécanique, y compris la photocopie et les microfilms, sans l'accord écrit de l'IEC ou du Comité national de l'IEC du pays du demandeur. Si vous avez des questions sur le copyright de l'IEC ou si vous désirez obtenir des droits supplémentaires sur cette publication, utilisez les coordonnées ci-après ou contactez le Comité national de l'IEC de votre pays de résidence.

IEC Secretariat
3, rue de Varembé
CH-1211 Geneva 20
Switzerland

Tel.: +41 22 919 02 11
info@iec.ch
www.iec.ch

**About the IEC**
The International Electrotechnical Commission (IEC) is the leading global organization that prepares and publishes International Standards for all electrical, electronic and related technologies.

**About IEC publications**
The technical content of IEC publications is kept under constant review by the IEC. Please make sure that you have the latest edition, a corrigendum or an amendment might have been published.

**IEC publications search - webstore.iec.ch/advsearchform**
The advanced search enables to find IEC publications by a variety of criteria (reference number, text, technical committee, …). It also gives information on projects, replaced and withdrawn publications.

**IEC Just Published - webstore.iec.ch/justpublished**
Stay up to date on all new IEC publications. Just Published details all new publications released. Available online and once a month by email.

**IEC Customer Service Centre - webstore.iec.ch/csc**
If you wish to give us your feedback on this publication or need further assistance, please contact the Customer Service Centre: sales@iec.ch.

**IEC Products & Services Portal - products.iec.ch**
Discover our powerful search engine and read freely all the publications previews. With a subscription you will always have access to up to date content tailored to your needs.

**Electropedia - www.electropedia.org**
The world's leading online dictionary on electrotechnology, containing more than 22 300 terminological entries in English and French, with equivalent terms in 19 additional languages. Also known as the International Electrotechnical Vocabulary (IEV) online.

---

**A propos de l'IEC**
La Commission Electrotechnique Internationale (IEC) est la première organisation mondiale qui élabore et publie des Normes internationales pour tout ce qui a trait à l'électricité, à l'électronique et aux technologies apparentées.

**A propos des publications IEC**
Le contenu technique des publications IEC est constamment revu. Veuillez vous assurer que vous possédez l'édition la plus récente, un corrigendum ou amendement peut avoir été publié.

**Recherche de publications IEC - webstore.iec.ch/advsearchform**
La recherche avancée permet de trouver des publications IEC en utilisant différents critères (numéro de référence, texte, comité d'études, …). Elle donne aussi des informations sur les projets et les publications remplacées ou retirées.

**IEC Just Published - webstore.iec.ch/justpublished**
Restez informé sur les nouvelles publications IEC. Just Published détaille les nouvelles publications parues. Disponible en ligne et une fois par mois par email.

**Service Clients - webstore.iec.ch/csc**
Si vous désirez nous donner des commentaires sur cette publication ou si vous avez des questions contactez-nous: sales@iec.ch.

**IEC Products & Services Portal - products.iec.ch**
Découvrez notre puissant moteur de recherche et consultez gratuitement tous les aperçus des publications. Avec un abonnement, vous aurez toujours accès à un contenu à jour adapté à vos besoins.

**Electropedia - www.electropedia.org**
Le premier dictionnaire d'électrotechnologie en ligne au monde, avec plus de 22 300 articles terminologiques en anglais et en français, ainsi que les termes équivalents dans 19 langues additionnelles. Egalement appelé Vocabulaire Electrotechnique International (IEV) en ligne.

---

AVA Documents
Document Sharing Hub

Full document details: IEC 62561-4-2023

# IEC 62561-4

Edition 3.0 2023-10

# INTERNATIONAL STANDARD

# NORME INTERNATIONALE

## Lightning protection system components (LPSC) – Part 4: Requirements for conductor fasteners

## Composants des systèmes de protection contre la foudre (CSPF) – Partie 4: Exigences pour les fixations de conducteurs

INTERNATIONAL
ELECTROTECHNICAL
COMMISSION

COMMISSION
ELECTROTECHNIQUE
INTERNATIONALE

ICS 29.020, 91.120.40

ISBN 978-2-8322-7614-3

**Warning! Make sure that you obtained this publication from an authorized distributor.**
**Attention! Veuillez vous assurer que vous avez obtenu cette publication via un distributeur agréé.**

Documents
Document Sharing Hub

® Registered trademark of the International Electrotechnical Commission
Marque déposée de la Commission Electrotechnique Internationale

Full document details: IEC 62561-4-2023

CONTENTS

FOREWORD ..... 4
INTRODUCTION ..... 6
1 Scope ..... 7
2 Normative references ..... 7
3 Terms and definitions ..... 8
4 Classification ..... 8
4.1 According to the material of the conductor fastener ..... 8
4.2 According to the fixing arrangement of the conductor within the conductor fastener ..... 8
4.3 According to the conductor clamping arrangement ..... 8
5 Requirements ..... 8
5.1 General ..... 8
5.2 Environmental requirements ..... 9
5.2.1 Corrosion resistance ..... 9
5.2.2 Ultraviolet (UV) light resistance ..... 9
5.3 Mechanical strength ..... 9
5.3.1 Perpendicular and axial loads ..... 9
5.3.2 Impact tests ..... 9
5.4 Installation instructions ..... 9
5.5 Marking ..... 10
5.5.1 Content of marking ..... 10
5.5.2 Durability and legibility ..... 10
6 Tests ..... 10
6.1 General test conditions ..... 10
6.2 Preparation of the specimen ..... 11
6.3 Environmental influence test ..... 11
6.3.1 General ..... 11
6.3.2 Metallic ..... 11
6.3.3 Non-metallic ..... 12
6.3.4 Composite ..... 12
6.4 Resistance to mechanical effects ..... 13
6.4.1 Lateral load test ..... 13
6.4.2 Axial load test ..... 14
6.4.3 Impact test ..... 15
6.5 Installation instructions ..... 15
6.5.1 General conditions ..... 15
6.5.2 Acceptance criteria ..... 15
6.6 Marking test ..... 15
6.6.1 General test conditions ..... 15
6.6.2 Acceptance criteria ..... 15
6.7 Construction ..... 16
7 Electromagnetic compatibility (EMC) ..... 16
8 Structure and content of the test report ..... 16
8.1 General ..... 16
8.2 Report identification ..... 16
8.3 Specimen description ..... 17

AVA Documents
Document Sharing Hub
Full document details: IEC 62561-4-2023

8.4 Conductor ..... 17
8.5 Standards and references ..... 17
8.6 Test procedure ..... 17
8.7 Testing equipment, description ..... 17
8.8 Measuring instruments description ..... 17
8.9 Results and parameters recorded ..... 17
8.10 Statement of pass and fail ..... 18
Annex A (normative) Resistance to corrosion for metallic and composite conductor fasteners ..... 19
A.1 General ..... 19
A.2 Salt mist treatment ..... 19
A.3 Humid sulphurous atmosphere treatment ..... 19
A.4 Ammonia atmosphere treatment ..... 19
Annex B (normative) Environmental test for non-metallic and composite conductor fasteners – Resistance to ultraviolet light ..... 20
B.1 General ..... 20
B.2 Test ..... 20
B.3 First alternative test to Clause B.2 ..... 20
B.4 Second alternative test to Clause B.2 ..... 20
Annex C (normative) Applicability of previous tests ..... 21
Annex D (normative) Flow chart of tests for conductor fastener ..... 22
Bibliography ..... 23

Figure 1 – Basic arrangement of specimens ..... 12
Figure 2 – Basic arrangement of lateral load test ..... 13
Figure 3 – Typical arrangement for axial movement test ..... 14
Figure D.1 – Flowchart of tests for conductor fastener ..... 22

Table C.1 – Differences in the requirements for conductor fasteners complying with IEC 62561-4:2010 or 62561-4:2017 ..... 21

Documents
Document Sharing Hub

Full document details: IEC 62561-4-2023

INTERNATIONAL ELECTROTECHNICAL COMMISSION

# LIGHTNING PROTECTION SYSTEM COMPONENTS (LPSC) –

## Part 4: Requirements for conductor fasteners

## FOREWORD

1) The International Electrotechnical Commission (IEC) is a worldwide organization for standardization comprising all national electrotechnical committees (IEC National Committees). The object of IEC is to promote international co-operation on all questions concerning standardization in the electrical and electronic fields. To this end and in addition to other activities, IEC publishes International Standards, Technical Specifications, Technical Reports, Publicly Available Specifications (PAS) and Guides (hereafter referred to as "IEC Publication(s)"). Their preparation is entrusted to technical committees; any IEC National Committee interested in the subject dealt with may participate in this preparatory work. International, governmental and non-governmental organizations liaising with the IEC also participate in this preparation. IEC collaborates closely with the International Organization for Standardization (ISO) in accordance with conditions determined by agreement between the two organizations.
2) The formal decisions or agreements of IEC on technical matters express, as nearly as possible, an international consensus of opinion on the relevant subjects since each technical committee has representation from all interested IEC National Committees.
3) IEC Publications have the form of recommendations for international use and are accepted by IEC National Committees in that sense. While all reasonable efforts are made to ensure that the technical content of IEC Publications is accurate, IEC cannot be held responsible for the way in which they are used or for any misinterpretation by any end user.
4) In order to promote international uniformity, IEC National Committees undertake to apply IEC Publications transparently to the maximum extent possible in their national and regional publications. Any divergence between any IEC Publication and the corresponding national or regional publication shall be clearly indicated in the latter.
5) IEC itself does not provide any attestation of conformity. Independent certification bodies provide conformity assessment services and, in some areas, access to IEC marks of conformity. IEC is not responsible for any services carried out by independent certification bodies.
6) All users should ensure that they have the latest edition of this publication.
7) No liability shall attach to IEC or its directors, employees, servants or agents including individual experts and members of its technical committees and IEC National Committees for any personal injury, property damage or other damage of any nature whatsoever, whether direct or indirect, or for costs (including legal fees) and expenses arising out of the publication, use of, or reliance upon, this IEC Publication or any other IEC Publications.
8) Attention is drawn to the Normative references cited in this publication. Use of the referenced publications is indispensable for the correct application of this publication.
9) IEC draws attention to the possibility that the implementation of this document may involve the use of (a) patent(s). IEC takes no position concerning the evidence, validity or applicability of any claimed patent rights in respect thereof. As of the date of publication of this document, IEC had not received notice of (a) patent(s), which may be required to implement this document. However, implementers are cautioned that this may not represent the latest information, which may be obtained from the patent database available at https://patents.iec.ch. IEC shall not be held responsible for identifying any or all such patent rights.

IEC 62561-4 has been prepared by IEC technical committee 81: Lightning protection. It is an International Standard.

This third edition cancels and replaces the second edition published in 2017. This edition constitutes a technical revision.

This edition includes the following significant technical changes with respect to the previous edition:

a) alignment with the latest edition of ISO IEC 60068-2-52:2017 relating to salt mist atmosphere treatment;
b) alignment with the new edition of ISO 22479:2019 relating to humid sulphurous atmosphere treatment;
c) new normative annex for the applicability of previous tests.

Documents
Document Sharing Hub

Full document details: IEC 62561-4-2023

The text of this International Standard is based on the following documents:

| Draft | Report on voting |
|---|---|
| 81/734/FDIS | 81/740/RVD |

Full information on the voting for its approval can be found in the report on voting indicated in the above table.

The language used for the development of this International Standard is English.

This document was drafted in accordance with ISO/IEC Directives, Part 2, and developed in accordance with ISO/IEC Directives, Part 1 and ISO/IEC Directives, IEC Supplement, available at www.iec.ch/members_experts/refdocs. The main document types developed by IEC are described in greater detail at www.iec.ch/publications.

A list of all the parts in the IEC 62561 series, published under the general title *Lightning protection system components (LPSC)*, can be found on the IEC website.

The committee has decided that the contents of this document will remain unchanged until the stability date indicated on the IEC website under webstore.iec.ch in the data related to the specific document. At this date, the document will be

- reconfirmed,
- withdrawn, or
- revised.

Documents
Document Sharing Hub

Full document details: IEC 62561-4-2023

# INTRODUCTION

This part of IEC 62561 deals with the requirements and tests for lightning protection system components (LPSC), specifically conductor fasteners used for the installation of a lightning protection system (LPS) designed and implemented in accordance with the IEC 62305 series.

Documents
Document Sharing Hub

Full document details: IEC 62561-4-2023

# LIGHTNING PROTECTION SYSTEM COMPONENTS (LPSC) –

## Part 4: Requirements for conductor fasteners

## 1 Scope

This part of IEC 62561 deals with the requirements and tests for metallic and non-metallic conductor fasteners that are used to retain and support the air-termination, down-conductor and earth-termination systems.

This document does not cover the fixing of conductor fasteners to the fabric of structures due to the vast number and types used in modern day construction.

Testing of components for an explosive atmosphere is not covered by this document. Extra requirements for the components can be necessary for LSCs intended for use in hazardous atmospheres.

NOTE In CENELEC member countries, testing requirements of components for explosive atmospheres are specified in CLC/TS 50703-2.

## 2 Normative references

The following documents are referred to in the text in such a way that some or all of their content constitutes requirements of this document. For dated references, only the edition cited applies. For undated references, the latest edition of the referenced document (including any amendments) applies.

IEC 60068-2-52:2017, *Environmental testing – Part 2-52: Tests – Test Kb: Salt mist, cyclic (sodium chloride solution)*

IEC 60068-2-75:2014, *Environmental testing – Part 2: Tests – Test Eh: Hammer tests*

IEC 62305-3:2010, *Protection against lightning – Part 3: Physical damage to structures and life hazard*

IEC 62561-1, *Lightning protection system components (LPSC) – Part 1: Requirements for connection components*

ISO 4892-2, *Plastics – Methods of exposure to laboratory light sources – Part 2: Xenon – arc lamps*

ISO 4892-3:2016, *Plastics – Methods of exposure to laboratory light sources – Part 3: Fluorescent UV lamps*

ISO 4892-4, *Plastics – Methods of exposure to laboratory light sources – Part 4: Open-flame carbon-arc lamps*

ISO 6957:1988, *Copper alloys – Ammonia test for stress corrosion resistance*

ISO 22479:2019, *Corrosion of metals and alloys – Sulfur dioxide test in a humid atmosphere (fixed gas method)*

Documents
Document Sharing Hub

Full document details: IEC 62561-4-2023

## 3 Terms and definitions

For the purposes of this document, the following terms and definitions apply.

ISO and IEC maintain terminology databases for use in standardization at the following addresses:

- IEC Electropedia: available at https://www.electropedia.org/
- ISO Online browsing platform: available at https://www.iso.org/obp

**3.1**
**conductor fastener**
metallic, non-metallic or composite component designed to retain and support the air-termination, down-conductor and earth-termination systems, installed at intervals along the length of the conductors

**3.2**
**composite fastener**
mixture of metallic and non-metallic materials, for example plastic

**3.3**
**type test**
test made before supplying a type of material covered by IEC 62561-4 on a general commercial basis, in order to demonstrate satisfactory performance characteristics to meet the intended application

## 4 Classification

### 4.1 According to the material of the conductor fastener

a) metallic (e.g. hot dip galvanized steel, copper, aluminium, stainless steel);

b) non-metallic (e.g. PVC, plastics);

c) composite (combination of metal and non-metallic).

If a metallic conductor fastener is used for bonding of two metallic parts of the external LPS it becomes a connection component and shall comply with testing requirements in accordance with IEC 62561-1.

### 4.2 According to the fixing arrangement of the conductor within the conductor fastener

a) with screws;

b) without screws (e.g. clips, springs).

### 4.3 According to the conductor clamping arrangement

a) conductor fasteners that are designed to clamp the conductor;

b) conductor fasteners that are designed to clamp but allow axial movement of the conductor.

## 5 Requirements

### 5.1 General

The conductor fastener shall carry out its function of clamping the conductor in an acceptable and safe manner when subjected to mechanical influences, lightning discharge stress and environmental influences.

Documents
Document Sharing Hub

Full document details: IEC 62561-4-2023

Conductor fasteners shall comply with the tests given in Clause 6. The material of the conductor fastener shall be compatible with the conductor it is fastening and the surface material onto which it is mounted.

NOTE 1 Certain extreme environmental conditions make the choice of non-metallic conductor fasteners unsuitable. Specific recommendations are provided by manufacturers as to their suitability in varying environments.

NOTE 2 Conductor fasteners are so designed and constructed that safe handling is ensured, that retention and support for the conductor is provided, and that in normal use their performance is reliable and without danger to persons and the surroundings.

## 5.2 Environmental requirements

### 5.2.1 Corrosion resistance

Metallic or composite conductor fasteners shall withstand corrosion effects.

Compliance is checked for metallic fasteners by the test specified in 6.3.2 or for composite fasteners by the tests described in 6.3.4.

### 5.2.2 Ultraviolet (UV) light resistance

Non-metallic and composite conductor fasteners shall withstand UV light effects.

Compliance is checked for non-metallic fasteners by the tests specified in 6.3.3 or for composite fasteners by the tests specified in 6.3.4.

## 5.3 Mechanical strength

### 5.3.1 Perpendicular and axial loads

The design of the conductor fastener shall be such that it carries the perpendicular loads caused by the weight of the conductor, snow, ice and wind and axial loads caused by the thermal expansion–contraction of the conductor and its weight.

Compliance is checked following the manufacturer's declaration for the classification of the conductor fastener in accordance with Clause 4 and by the tests specified in 6.4.1 and 6.4.2.

### 5.3.2 Impact tests

Conductor fasteners shall be so designed and constructed to withstand impact stresses caused accidentally.

Compliance is checked by the tests specified in 6.4.3.

## 5.4 Installation instructions

The manufacturer or supplier of the conductor fastener shall provide adequate information in its literature to ensure that the installer shall select and install the component in accordance with 62305-3:2010, 5.5.2 and manufacturer's instructions, containing at least the following information:

a) classifications according to Clause 4;

b) maximum and minimum conductor diameter;

c) materials of conductors to be used;

d) type of mounting surface to be used;

e) recommended method of assembly, installation and fixing to the mounting surface;

f) lateral load;

g) axial movement load.

Documents
Document Sharing Hub

Full document details: IEC 62561-4-2023

Compliance is checked by inspection in accordance with 6.5.

### 5.5 Marking

#### 5.5.1 Content of marking

Each conductor fastener shall be marked with:

a) the manufacturer's or responsible vendor's name, logo or trademark,

b) product identification or type.

Where it is not possible to make these marks directly onto the product, they shall be made on the smallest supplied packaging.

Compliance is checked in accordance with 6.6.

Where this proves to be impractical, the marking in accordance with a) and b) may be given on the smallest packing unit label or on the accompanying documentation.

NOTE 1 Marking can be applied for example by moulding, pressing, engraving, printing and environmental stress adhesive labels.

NOTE 2 Marking can be applied by water slide transfers for components installed indoors only.

#### 5.5.2 Durability and legibility

The marking shall be durable and legible.

Compliance is checked in accordance with 6.6.

## 6 Tests

### 6.1 General test conditions

The tests in accordance with this document are type tests (see 3.3), performed in a sequence according to Annex D. These tests are of such a nature that, after they have been performed, unless changes are made to the accessory materials, design or type of manufacturing process which can change the performance characteristics, repeated testing is not required.

The present document cannot cover all possible types of conductor fasteners and the way of fixing them on various surfaces of different materials. When required for these applications, agreement should be obtained between the test engineer and manufacturer on the specific testing regime.

Unless otherwise specified, tests are carried out with the specimens assembled and installed as in normal use as specified in the manufacturer's or supplier's instructions, with the recommended conductor materials, sizes and the tightening torque.

The tests shall be carried out in the sequence given after environmental tests of the specimen in accordance with 6.3.

Unless otherwise specified, 12 metallic or 18 composite/non-metallic specimens are subjected to the tests and the requirements are satisfied if all the tests criteria are met.

If only one of the specimens fails to satisfy a test due to a manufacturing fault, that test and any preceding one which can have influenced the results of the test shall be repeated. The tests which follow shall be made in the same required sequence on another full set of samples, all of which shall comply with the requirements.

Documents
Document Sharing Hub

Full document details: IEC 62561-4-2023

The applicant, when submitting the first set of samples, may also submit an additional set of samples that can be necessary should one sample fail. The testing laboratory shall then, without further request, test the additional set of samples, and shall only reject if a further failure occurs. If the additional set of samples is not submitted at the same time, a failure of one sample shall entail rejection.

Tests for non-metallic conductor fasteners shall not commence earlier than 168 h from the time of their manufacturing.

A torque meter shall be used for all tightening operations. It shall have a resolution of at least 0,5 Nm with an accuracy of ±4 % or less. The applicable tolerance for any applied mechanical load shall be within ±5 %.

For products already successfully tested in accordance with IEC 62561-4:2010 or IEC 62561-4:2017 the applicability of previous tests according to Annex C, Table C.1, may be applied.

For new products, complete type tests and samples according to Clause 6 are required.

## 6.2 Preparation of the specimen

If not otherwise specified by the manufacturer, the conductors and specimens shall be cleaned by using a suitable degreasing agent followed by cleaning in demineralized water and drying. They shall then be assembled in accordance with the manufacturer's installation instructions, for example with the recommended conductors and the tightening torques.

The tightening torque should be applied in a steady and uniform manner.

Any conductor fastener accommodating conductors with differences in size (diameter, thickness and width) equal to or less than 2 mm shall be tested using the minimum conductor size recommended. If the range is greater than 2 mm, the conductor fastener shall be tested using the minimum and maximum of conductor sizes.

## 6.3 Environmental influence test

### 6.3.1 General

In order for a conductor fastener to meet the requirements of this document, environmental tests shall be carried out in accordance with Annex A for metallic and composite conductor fasteners or Annex B for non-metallic and composite conductor fasteners.

The selection of the tests to be performed depends upon the conductor fastener material.

Annex D provides a flow chart relating the tests identified in 6.3.2, 6.3.3 and 6.3.4 to the conductor fastener material.

NOTE The sequence of performing the UV test prior to the salt mist test for composite fasteners is due to the fact that during the salt mist test the specimen is covered by a salt layer. This would inhibit the UV exposure test.

### 6.3.2 Metallic

Two sets, each one consisting of three arrangements, shall be assembled and mounted rigidly on an insulating plate (e.g. brick, polytetrafluoroethylene (PTFE)) as shown in Figure 1 in accordance with the manufacturer's installation instructions, for example with the recommended conductors and the tightening torques for screwed fastening conductor fasteners.

Documents
Document Sharing Hub
Full document details: IEC 62561-4-2023

The arrangements of specimens shall be subjected to environmental influence tests consisting of a salt mist test as specified in Clause A.2 followed by a humid sulphurous atmosphere test as specified in Clause A.3. An additional test by an ammonia atmosphere as specified in Clause A.4, shall be carried out for conductor fasteners made of copper alloys with copper content of less than 80 %.

The specimens are deemed to have passed the tests if there are no signs of corrosive deterioration of the conductor or conductor fastener visible to normal or corrected vision.

NOTE White rust, patina and surface oxidation are not considered to be corrosive deterioration.

Dimensions in millimetres

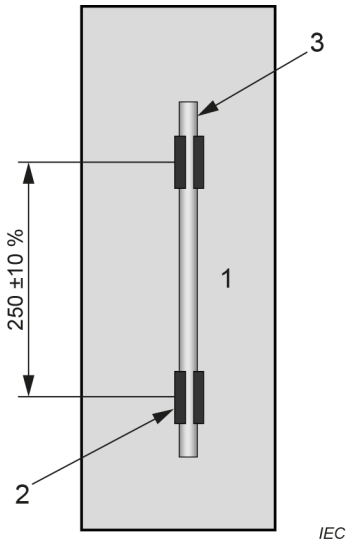


**Key**

1 mounting plate

2 fastener

3 conductor

**Figure 1 – Basic arrangement of specimens**

### 6.3.3 Non-metallic

Three sets, each one consisting of three arrangements, shall be assembled and mounted rigidly on an insulating plate (e.g. brick, polytetrafluoroethylene (PTFE)) as shown in Figure 1 in accordance with the manufacturer's installation instructions, for example with the recommended conductors and the tightening torques for screwed fastening conductor fasteners.

The arrangements of specimens shall be subjected to an environmental test consisting of an ultraviolet light test as specified in Annex B.

The specimens are deemed to have passed this part of the test if there are no signs of disintegration and no cracks visible to normal or corrected vision.

Ensure that the surface of the mounting plate is suitable to resist UV radiation.

### 6.3.4 Composite

Three sets, each one consisting of three arrangements, shall be assembled and mounted on a rigid surface (e.g., brick, polytetrafluoroethylene (PTFE)) as shown in Figure 1 in accordance with the manufacturer's installation instructions, for example with the recommended conductors and the tightening torques for screwed fastening conductor fasteners.

AVA Documents
Document Sharing Hub

Full document details: IEC 62561-4-2023

The arrangement of specimens shall be subjected to the environmental tests in the following sequence:

– test in accordance with 6.3.3, and
– test in accordance with 6.3.2.

The specimens are deemed to have passed this part of the test if the base metal of their metal parts does not exhibit any corrosive deterioration and if their non-metallic parts show no sign of disintegration and no cracks visible to normal or corrected vision.

Ensure that the surface of the mounting plate is suitable to resist UV radiation.

NOTE White rust, patina and surface oxidation are not considered to be corrosive deterioration.

## 6.4 Resistance to mechanical effects

### 6.4.1 Lateral load test

After the test of 6.3 a first set of three arrangements of specimens is subjected to a load test of 200 N applied in the mid-distance between the conductor fasteners as illustrated in Figure 2.

The test shall be performed using a stainless steel conductor with the appropriate dimensions.

For metallic conductor fasteners, the full test load is applied for minimum of 5 min and for composite and non-metallic conductor fasteners, the full test load is applied for a minimum period of 60 min.

All tests are carried out at a temperature of –10 °C ± 1 K and repeated at a temperature of +40 °C ± 4 K.

The specimens are deemed to have passed the tests provided that the conductor fasteners remain intact and the conductor is still located within the conductor fasteners.

Dimensions in millimetres

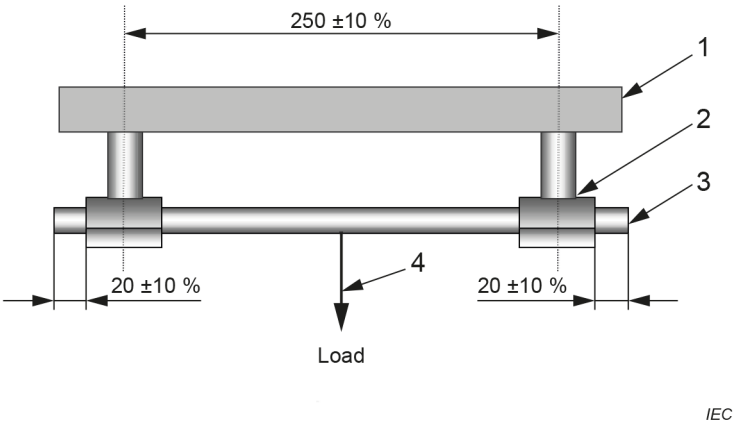


**Key**

1 mounting plate
2 fastener
3 conductor
4 load

**Figure 2 – Basic arrangement of lateral load test**

Documents
Document Sharing Hub
Full document details: IEC 62561-4-2023