IEC 62595-2

Edition 1.0 2012-09

INTERNATIONAL STANDARD

NORME INTERNATIONALE

colour inside

Withdrawn

LCD backlight unit –
Part 2: Electro-optical measurement methods of LED backlight unit

Écran LCD à rétro-éclairage –
Partie 2: Méthodes de mesures électro-optiques d'un écran à rétro-éclairage à DEL

IEC 62595-2:2012

Documents
Document Sharing Hub

Full document details: IEC 62595-2 2012

THIS PUBLICATION IS COPYRIGHT PROTECTED

Copyright © 2012 IEC, Geneva, Switzerland

All rights reserved. Unless otherwise specified, no part of this publication may be reproduced or utilized in any form or by any means, electronic or mechanical, including photocopying and microfilm, without permission in writing from either IEC or IEC's member National Committee in the country of the requester.
If you have any questions about IEC copyright or have an enquiry about obtaining additional rights to this publication, please contact the address below or your local IEC member National Committee for further information.

Droits de reproduction réservés. Sauf indication contraire, aucune partie de cette publication ne peut être reproduite ni utilisée sous quelque forme que ce soit et par aucun procédé, électronique ou mécanique, y compris la photocopie et les microfilms, sans l'accord écrit de la CEI ou du Comité national de la CEI du pays du demandeur.
Si vous avez des questions sur le copyright de la CEI ou si vous désirez obtenir des droits supplémentaires sur cette publication, utilisez les coordonnées ci-après ou contactez le Comité national de la CEI de votre pays de résidence.

IEC Central Office
3, rue de Varembé
CH-1211 Geneva 20
Switzerland

Tel.: +41 22 919 02 11
Fax: +41 22 919 03 00
info@iec.ch
www.iec.ch

About the IEC

The International Electrotechnical Commission (IEC) is the leading global organization that prepares and publishes International Standards for all electrical, electronic and related technologies.

About IEC publications

The technical content of IEC publications is kept under constant review by the IEC. Please make sure that you have the latest edition, a corrigenda or an amendment might have been published.

Useful links:

IEC publications search - www.iec.ch/searchpub

The advanced search enables you to find IEC publications by a variety of criteria (reference number, text, technical committee,…).
It also gives information on projects, replaced and withdrawn publications.

IEC Just Published - webstore.iec.ch/justpublished

Stay up to date on all new IEC publications. Just Published details all new publications released. Available on-line and also once a month by email.

Electropedia - www.electropedia.org

The world's leading online dictionary of electronic and electrical terms containing more than 30 000 terms and definitions in English and French, with equivalent terms in additional languages. Also known as the International Electrotechnical Vocabulary (IEV) on-line.

Customer Service Centre - webstore.iec.ch/csc

If you wish to give us your feedback on this publication or need further assistance, please contact the Customer Service Centre: csc@iec.ch.

A propos de la CEI

La Commission Electrotechnique Internationale (CEI) est la première organisation mondiale qui élabore et publie des Normes internationales pour tout ce qui a trait à l'électricité, à l'électronique et aux technologies apparentées.

A propos des publications CEI

Le contenu technique des publications de la CEI est constamment revu. Veuillez vous assurer que vous possédez l'édition la plus récente, un corrigendum ou amendement peut avoir été publié.

Liens utiles:

Recherche de publications CEI - www.iec.ch/searchpub

La recherche avancée vous permet de trouver des publications CEI en utilisant différents critères (numéro de référence, texte, comité d'études,…).
Elle donne aussi des informations sur les projets et les publications remplacées ou retirées.

Just Published CEI - webstore.iec.ch/justpublished

Restez informé sur les nouvelles publications de la CEI. Just Published détaille les nouvelles publications parues. Disponible en ligne et aussi une fois par mois par email.

Electropedia - www.electropedia.org

Le premier dictionnaire en ligne au monde de termes électroniques et électriques. Il contient plus de 30 000 termes et définitions en anglais et en français, ainsi que les termes équivalents dans les langues additionnelles. Egalement appelé Vocabulaire Electrotechnique International (VEI) en ligne.

Service Clients - webstore.iec.ch/csc

Si vous désirez nous donner des commentaires sur cette publication ou si vous avez des questions contactez-nous: csc@iec.ch.

Withdrawn

Documents
Document Sharing Hub

Full document details: IEC 62595-2 2012

IEC 62595-2

Edition 1.0 2012-09

INTERNATIONAL STANDARD

NORME INTERNATIONALE

colour inside

withdrawn

LCD backlight unit –
Part 2: Electro-optical measurement methods of LED backlight unit

Écran LCD à rétro-éclairage –
Partie 2: Méthodes de mesures électro-optiques d'un écran à rétro-éclairage à DEL

INTERNATIONAL
ELECTROTECHNICAL
COMMISSION

COMMISSION
ELECTROTECHNIQUE
INTERNATIONALE

PRICE CODE
CODE PRIX

P

ICS 31.120; 31.260

ISBN 978-2-83220-344-6

Warning! Make sure that you obtained this publication from an authorized distributor.
Attention! Veuillez vous assurer que vous avez obtenu cette publication via un distributeur agréé.

AVA Documents
Document Sharing Hub

® Registered trademark of the International Electrotechnical Commission
Marque déposée de la Commission Electrotechnique Internationale

Full document details: IEC 62595-2 2012

CONTENTS

FOREWORD 3
1 Scope 5
2 Normative references 5
3 Terms and definitions 5
4 General measurement conditions 5
4.1 Standard atmospheric conditions for LED BLU 5
4.2 Measuring setup 5
4.3 Warm-up time 6
5 Measurement methods 7
5.1 Electrical measurement methods 7
5.1.1 Conditions 7
5.1.2 Current 7
5.1.3 Voltage 7
5.1.4 Power consumption 7
5.2 Optical measurement methods 8
5.2.1 Conditions 8
5.2.2 Luminance 8
5.2.3 Luminance uniformity 8
5.2.4 Spectral power distribution 10
5.2.5 Chromaticity 10
5.2.6 Colour uniformity 10
5.2.7 Correlated colour temperature 11
5.2.8 Angular luminance uniformity 11
5.2.9 Angular colour uniformity 11
5.2.10 Measurement methods of block-wise BLU 12
Annex A (informative) Practical measurement methods of block-wise BLU 14
Bibliography 16

Figure 1 – Example of measuring setup for LED BLU 6
Figure 2 – Example of warm-up characteristic of BLU 7
Figure 3 – Definition of zenith angle θ and azimuth angle ϕ. 8
Figure 4 – Examples of measurement point layout 10
Figure 5 – Angular luminance uniformity measurement 11
Figure 6 – Example of test pattern (8 × 10 segments) for block-wise BLU 12
Figure 7 – Example of incoherent point spread function 12
Figure 8 – Example of test pattern of incoherent point spread function 13
Figure 9 – Example of test pattern of crosstalk 13
Figure A.1 – Measurement of average slope of incoherent point spread function 14
Figure A.2 – Black box pattern for crosstalk measurement using LCD 15
Figure A.3 – Example of crosstalk measurement results using LCD 15

Withdrawn

Documents
Document Sharing Hub
Full document details: IEC 62595-2 2012

INTERNATIONAL ELECTROTECHNICAL COMMISSION

LCD BACKLIGHT UNIT –

Part 2: Electro-optical measurement methods of LED backlight unit

FOREWORD

1) The International Electrotechnical Commission (IEC) is a worldwide organization for standardization comprising all national electrotechnical committees (IEC National Committees). The object of IEC is to promote international co-operation on all questions concerning standardization in the electrical and electronic fields. To this end and in addition to other activities, IEC publishes International Standards, Technical Specifications, Technical Reports, Publicly Available Specifications (PAS) and Guides (hereafter referred to as "IEC Publication(s)"). Their preparation is entrusted to technical committees; any IEC National Committee interested in the subject dealt with may participate in this preparatory work. International, governmental and non-governmental organizations liaising with the IEC also participate in this preparation. IEC collaborates closely with the International Organization for Standardization (ISO) in accordance with conditions determined by agreement between the two organizations.
2) The formal decisions or agreements of IEC on technical matters express, as nearly as possible, an international consensus of opinion on the relevant subjects since each technical committee has representation from all interested IEC National Committees.
3) IEC Publications have the form of recommendations for international use and are accepted by IEC National Committees in that sense. While all reasonable efforts are made to ensure that the technical content of IEC Publications is accurate, IEC cannot be held responsible for the way in which they are used or for any misinterpretation by any end user.
4) In order to promote international uniformity, IEC National Committees undertake to apply IEC Publications transparently to the maximum extent possible in their national and regional publications. Any divergence between any IEC Publication and the corresponding national or regional publication shall be clearly indicated in the latter.
5) IEC itself does not provide any attestation of conformity. Independent certification bodies provide conformity assessment services and, in some areas, access to IEC marks of conformity. IEC is not responsible for any services carried out by independent certification bodies.
6) All users should ensure that they have the latest edition of this publication.
7) No liability shall attach to IEC or its directors, employees, servants or agents including individual experts and members of its technical committees and IEC National Committees for any personal injury, property damage or other damage of any nature whatsoever, whether direct or indirect, or for costs (including legal fees) and expenses arising out of the publication, use of, or reliance upon, this IEC Publication or any other IEC Publications.
8) Attention is drawn to the Normative references cited in this publication. Use of the referenced publications is indispensable for the correct application of this publication.
9) Attention is drawn to the possibility that some of the elements of this IEC Publication may be the subject of patent rights. IEC shall not be held responsible for identifying any or all such patent rights.

International Standard IEC 62595-2 has been prepared by IEC Technical Committee 110: Electronic display devices.

The text of this standard is based on the following documents:

FDIS	Report on voting
110/384/FDIS	110/406/RVD

Full information on the voting for the approval of this standard can be found in the report on voting indicated in the above table.

This publication has been drafted in accordance with the ISO/IEC Directives, Part 2.

A list of all parts in the IEC 62595 series, published under the general title *LCD backlight unit*, can be found on the IEC website.

Withdrawn

AVA Documents
Document Sharing Hub

Full document details: IEC 62595-2 2012

The committee has decided that the contents of this publication will remain unchanged until the stability date indicated on the IEC web site under "http://webstore.iec.ch" in the data related to the specific publication. At this date, the publication will be

- reconfirmed,
- withdrawn,
- replaced by a revised edition, or
- amended.

IMPORTANT – The 'colour inside' logo on the cover page of this publication indicates that it contains colours which are considered to be useful for the correct understanding of its contents. Users should therefore print this document using a colour printer.

Withdrawn

Documents
Document Sharing Hub

Full document details: IEC 62595-2 2012

LCD BACKLIGHT UNIT –

Part 2: Electro-optical measurement methods of LED backlight unit

Withdrawn

1 Scope

This part of IEC 62595 series specifies the standard measurement conditions and measuring methods for determining electrical, optical, and electro-optical parameters of LED backlight units for liquid crystal displays.

NOTE Other backlights (Cold Cathode Fluorescent Lamps (CCFLs), External Electrode Fluorescent Lamps (EEFLs), Hot Cathode Fluorescent Lamps (HCFLs), Carbon Nano Tube (CNT), etc.) are excluded from this standard.

2 Normative references

The following documents, in whole or in part, are normatively referenced in this document and are indispensable for its application. For dated references, only the edition cited applies. For undated references, the latest edition of the referenced document (including any amendments) applies.

IEC 60050 (all parts), *International Electrotechnical Vocabulary* (available at http://www.electropedia.org)

IEC 61747-6, *Liquid crystal and solid-state display devices – Part 6: Measuring methods for liquid crystal modules – Transmissive type*

IEC 62595-1-2, *LCD Backlight unit – Part 1-2: Terminology and letter symbols*

CIE publication 15:2004, *Colorimetry*

3 Terms and definitions

For the purposes of this document, the terms and definitions given in IEC 62595-1-2 apply.

4 General measurement conditions

4.1 Standard atmospheric conditions for LED BLU

Unless otherwise specified, all tests and measurements for LED backlight unit shall be carried out after sufficient warm-up time for illumination sources and devices under test (see 4.3), under the standard environmental conditions, at a temperature of 25 °C ± 3 °C, at a relative humidity of 25 % to 85 %, and at an atmospheric pressure of 86 kPa to 106 kPa. When different environmental conditions are used, they shall be noted in the detail specification (see IEC 61747-6).

4.2 Measuring setup

DUT, LMD, power source, driving and control devices for LED, and electrical measuring devices should be arranged appropriately for electro-optical measurements for LED BLU.

An example of measuring setup is shown in Figure 1.

Documents
Document Sharing Hub

Full document details: IEC 62595-2 2012

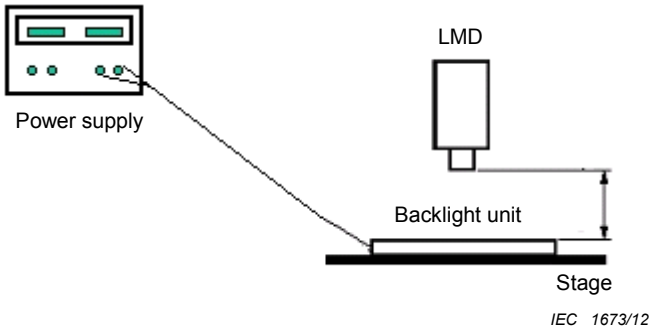

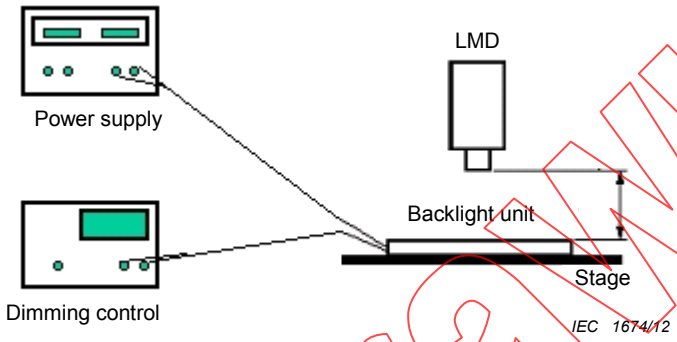

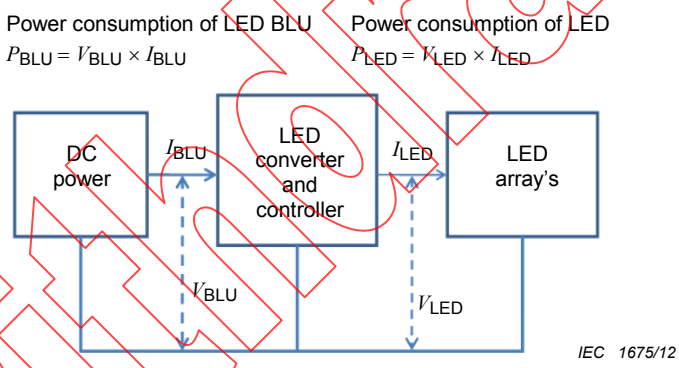

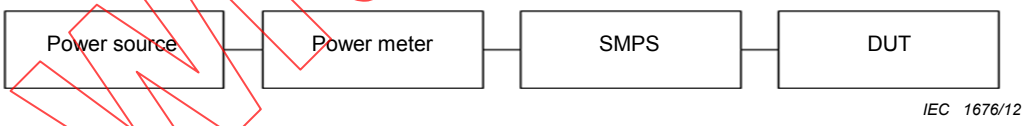

Key

LMD light measuring device

SMPS switching-mode power supply

DUT device under test

Figure 1 – Example of measuring setup for LED BLU

4.3 Warm-up time

Transient measurement shall be carried out and recorded until the fluctuations of luminance measured at the centre point of the BLU become less than the range specified in IEC 61747-6. As in Figure 2, luminance of LED backlights is affected by transient temperature behaviour of LED output. It takes a certain time for LEDs until their junction temperature reach the steady state. All measuring conditions shall be kept constant over the time range of recording. Transient measurement of chromaticity should be carried out in the same manner as in the above.

Withdrawn

Documents
Document Sharing Hub
Full document details: IEC 62595-2 2012

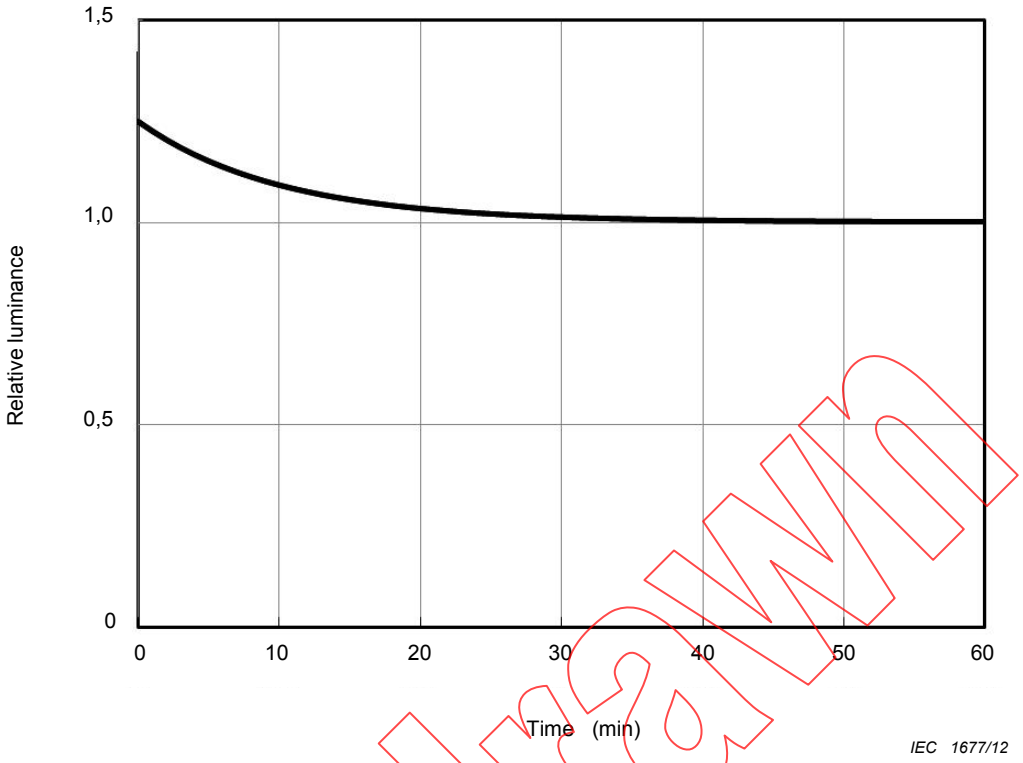

Figure 2 – Example of warm-up characteristic of BLU

Withdrawn

5 Measurement methods

5.1 Electrical measurement methods

5.1.1 Conditions

BLU shall be placed in the measurement arrangement and it shall be assured that all required conditions are fulfilled.

After applying the initial electrical driving conditions (i.e. analogue input voltage(s) or digital input signals) of the BLU and waiting during the warm-up time specified in 4.3 in order to reach the steady state, the measurement of the electrical quantities of interest should be started.

5.1.2 Current

The measurement of input current is performed under standard measuring conditions using current meter shown in Figure 1.

5.1.3 Voltage

The measurement of input voltage is performed under standard measuring conditions using voltage meter shown in Figure 1.

5.1.4 Power consumption

Basically, the measurement of power consumption should be carried out under the standard measuring conditions in 4.1, using a power meter.

Documents
Document Sharing Hub
Full document details: IEC 62595-2 2012

5.2 Optical measurement methods

5.2.1 Conditions

LED BLU to be measured should be placed in the measurement arrangement and it shall be assured that all required conditions are fulfilled.

After applying the initial electrical driving conditions to the BLU and after waiting during the warm-up time specified in 4.3 in order to reach the steady state, the measurement of the optical quantities of interest shall be started.

Basically, the measurement of this standard should be carried out at various angles between DUT and LMD. A polar coordinate system (θ,ϕ), with the zenith denoted by θ and the azimuth denoted by ϕ should be considered (see Figure 3).

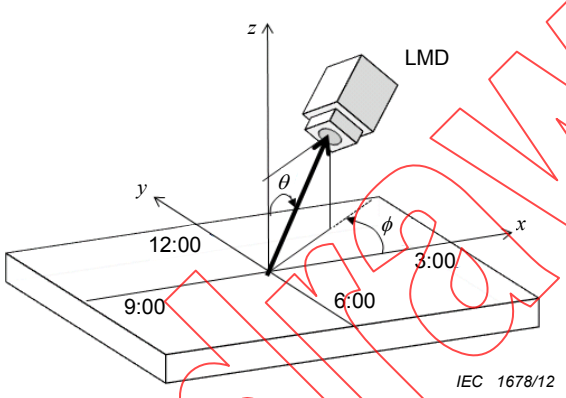

Figure 3 – Definition of zenith angle θ and azimuth angle ϕ.

5.2.2 Luminance

The measurements should be carried out in the dark room under the standard measuring conditions and for the design viewing directions.

a) Position the DUT.

b) Adjust the LMD to the specified viewing direction, according to angles θ and ϕ.

c) Supply the value of the input signals to the DUT. Then measure the DUT at position p_i to obtain the luminance L_{vi} (θ,ϕ). (In case of i = 0, the position implies the centre of the active area of the BLU.)

The LMD should be carefully checked before measurements, considering the following checkpoints:

- sensitivity of the measured quantity to measuring light;
- errors caused by veiling glare and lens flare (i.e., stray light in optical system);
- timing of data-acquisition, low-pass filtering and aliasing-effects;
- linearity of detection and data-conversion.

NOTE CIE publication 69:1987 is available for reference of LMD evaluation procedures.

5.2.3 Luminance uniformity

Luminance uniformity, U, is a calculated value of how well the luminance remains constant over the surface of the active area and it is a closely related to luminance measurement itself.

Withdrawn

Documents
Document Sharing Hub
Full document details: IEC 62595-2 2012

The luminance uniformity measurement is sensitive to testing positions. Typical layouts of measurement points over the BLU surface are shown in Figure 4.

Luminance uniformity, U is calculated using one of the following four formulas which are popularly used industry-wide.

$$U = \frac{L_{\mathrm{vm}}}{L_{\mathrm{vM}}}$$

$$U = \frac{L_{\mathrm{vM}}}{L_{\mathrm{vm}}}$$

$$U = \frac{L_{\mathrm{vM}} - L_{\mathrm{vm}}}{L_{\mathrm{vM}}}$$

$$U = \frac{L_{\mathrm{vM}} - L_{\mathrm{vm}}}{L_{\mathrm{va}}}$$

where

L_{vM} is the maximum luminance value of all measurement points in Figure 4;

L_{vm} is the minimum luminance; and

L_{va} is the average luminance calculated as:

$$L_{\mathrm{va}} = \sum_{i=1}^{N} \frac{L_{\mathrm{vi}}}{N}$$

where

N is the number of measurement points; and

L_{vi} is luminance of an arbitrary point.

Typical measurement procedures of luminance uniformity U are as follows. At first, specified input current and voltage are supplied to the BLU to be measured. Secondly, luminance is measured at each point of the BLU (5, 9, 13 or 25 points). Basically, this measurement is carried out usually at normal angle, however, the other angles can be also considered for certain purposes.

Withdrawn

Documents
Document Sharing Hub

Full document details: IEC 62595-2 2012