# IEC 62629-22-1

Edition 2.0 2016-10

# INTERNATIONAL STANDARD

## 3D display devices –
## Part 22-1: Measuring methods for autostereoscopic displays – Optical

IEC 62629-22-1:2016-10(en)

Documents
Document Sharing Hub
Full document details: IEC 62629-22-1 2016

**THIS PUBLICATION IS COPYRIGHT PROTECTED**

**Copyright © 2016 IEC, Geneva, Switzerland**

All rights reserved. Unless otherwise specified, no part of this publication may be reproduced or utilized in any form or by any means, electronic or mechanical, including photocopying and microfilm, without permission in writing from either IEC or IEC's member National Committee in the country of the requester. If you have any questions about IEC copyright or have an enquiry about obtaining additional rights to this publication, please contact the address below or your local IEC member National Committee for further information.

IEC Central Office
3, rue de Varembé
CH-1211 Geneva 20
Switzerland

Tel.: +41 22 919 02 11
Fax: +41 22 919 03 00
info@iec.ch
www.iec.ch

**About the IEC**
The International Electrotechnical Commission (IEC) is the leading global organization that prepares and publishes International Standards for all electrical, electronic and related technologies.

**About IEC publications**
The technical content of IEC publications is kept under constant review by the IEC. Please make sure that you have the latest edition, a corrigenda or an amendment might have been published.

**IEC Catalogue - webstore.iec.ch/catalogue**
The stand-alone application for consulting the entire bibliographical information on IEC International Standards, Technical Specifications, Technical Reports and other documents. Available for PC, Mac OS, Android Tablets and iPad.

**IEC publications search - www.iec.ch/searchpub**
The advanced search enables to find IEC publications by a variety of criteria (reference number, text, technical committee,…). It also gives information on projects, replaced and withdrawn publications.

**IEC Just Published - webstore.iec.ch/justpublished**
Stay up to date on all new IEC publications. Just Published details all new publications released. Available online and also once a month by email.

**Electropedia - www.electropedia.org**
The world's leading online dictionary of electronic and electrical terms containing 20 000 terms and definitions in English and French, with equivalent terms in 15 additional languages. Also known as the International Electrotechnical Vocabulary (IEV) online.

**IEC Glossary - std.iec.ch/glossary**
65 000 electrotechnical terminology entries in English and French extracted from the Terms and Definitions clause of IEC publications issued since 2002. Some entries have been collected from earlier publications of IEC TC 37, 77, 86 and CISPR.

**IEC Customer Service Centre - webstore.iec.ch/csc**
If you wish to give us your feedback on this publication or need further assistance, please contact the Customer Service Centre: csc@iec.ch.

Documents
Document Sharing Hub

Full document details: IEC 62629-22-1 2016

# IEC 62629-22-1

Edition 2.0 2016-10

# INTERNATIONAL STANDARD

## 3D display devices –
## Part 22-1: Measuring methods for autostereoscopic displays – Optical

INTERNATIONAL
ELECTROTECHNICAL
COMMISSION

ICS 31.120; 31.260

ISBN 978-2-8322-3688-8

**Warning! Make sure that you obtained this publication from an authorized distributor.**

® Registered trademark of the International Electrotechnical Commission

Documents
Document Sharing Hub

Full document details: IEC 62629-22-1 2016

CONTENTS

FOREWORD ..... 5
1 Scope ..... 7
2 Normative references ..... 7
3 Terms, definitions and abbreviated terms ..... 7
3.1 Terms and definitions ..... 7
3.2 Abbreviated terms ..... 7
4 Standard measuring conditions ..... 8
4.1 Standard environmental conditions ..... 8
4.1.1 Temperature, humidity and pressure conditions ..... 8
4.1.2 Illumination conditions ..... 8
4.2 Light measuring device ..... 8
4.2.1 General ..... 8
4.2.2 Aperture size ..... 9
4.3 Measuring setup ..... 9
4.3.1 Designed viewing distance ..... 9
4.3.2 Measurement area ..... 10
4.3.3 Measuring layout ..... 10
4.4 Test signal ..... 12
4.5 Standard measuring points ..... 13
5 Measuring method for two-view and multi-view displays ..... 14
5.1 Maximum luminance direction ..... 14
5.1.1 General ..... 14
5.1.2 Measuring equipment ..... 14
5.1.3 Measuring conditions ..... 15
5.1.4 Measuring procedure ..... 15
5.1.5 Measurement report ..... 15
5.2 Lobe angle and lobe angle variation on screen ..... 16
5.2.1 General ..... 16
5.2.2 Measuring equipment ..... 16
5.2.3 Measuring conditions ..... 16
5.2.4 Measuring procedure ..... 17
5.2.5 Measurement report ..... 17
5.3 Luminance, screen luminance uniformity, and angular luminance variation ..... 18
5.3.1 Luminance and screen luminance uniformity ..... 18
5.3.2 Angular luminance variation ..... 19
5.4 White chromaticity, white chromaticity uniformity on screen, and white chromaticity variation in angle ..... 20
5.4.1 White chromaticity and white chromaticity uniformity on screen ..... 20
5.4.2 White chromaticity angular variation ..... 22
6 Standard measuring method for integral imaging displays (1D/2D) ..... 23
6.1 General ..... 23
6.2 Lobe angle and lobe angle variation on screen ..... 24
6.3 Luminance, screen luminance uniformity, and angular luminance variation ..... 24
6.3.1 Luminance and screen luminance uniformity ..... 24
6.3.2 Angular luminance variation ..... 24

AVA Documents
Document Sharing Hub

Full document details: IEC 62629-22-1 2016

6.4 White chromaticity, white chromaticity uniformity on screen, and white chromaticity variation in angle ..... 24
6.4.1 White chromaticity and white chromaticity uniformity on screen ..... 24
6.4.2 White chromaticity variation in angle ..... 24
7 Measuring method for 3D crosstalk related property ..... 24
7.1 3D crosstalk (luminance components ratio), 3D crosstalk variation on screen, and 3D crosstalk variation in angle for two-view and multi-view displays ..... 24
7.1.1 3D crosstalk (luminance components ratio) and 3D crosstalk variation on screen ..... 24
7.1.2 3D crosstalk angular variation ..... 27
7.2 3D crosstalk related property for multi-view display ..... 28
7.2.1 General ..... 28
7.2.2 Offset crosstalk ..... 28
7.2.3 3D pixel crosstalk ..... 30
Annex A (informative) Principle of autostereoscopic display ..... 35
A.1 General ..... 35
A.2 Two-view display ..... 35
A.3 Multi-view display ..... 36
A.4 Integral imaging display ..... 37
Annex B (informative) Angular profile of luminance ..... 39
Annex C (informative) 3D crosstalk based on one inter-pupil distance ..... 40
C.1 General ..... 40
C.2 Measuring equipment ..... 41
C.3 Measuring conditions ..... 41
C.4 Measuring procedure ..... 41
C.5 Measuring report ..... 41
Annex D (informative) View density for motion parallax smoothness ..... 44
D.1 General ..... 44
D.2 Measuring equipment ..... 44
D.3 Measuring conditions ..... 44
D.4 Measuring procedure ..... 44
D.5 Measuring report ..... 44
Bibliography ..... 46

Figure 1 – Measuring system ..... 9
Figure 2 – Measuring layout for centre point measurement ..... 10
Figure 3 – Measuring layout for multi-point measurement (side view) ..... 11
Figure 4 – Other measuring layout for multi-point measurement (side view) ..... 11
Figure 5 – Measuring layout for horizontal viewing direction dependency ..... 12
Figure 6 – Measuring layout for vertical viewing direction dependency ..... 12
Figure 7 – Two examples of the relation between pixel and lenslet in multi-view display ..... 13
Figure 8 – Measuring points for the centre and multi-point measurement ..... 14
Figure 9 – Example of $n$ by $m$ measuring points ..... 14
Figure 10 – Example of measurement results for angular luminance profile ..... 16
Figure 11 – Example of lobe angle measurement ..... 17
Figure 12 – Example of 3D crosstalk variation on screen ..... 25
Figure 13 – Example of acquired images in multi-view display ..... 28

Documents
Document Sharing Hub
Full document details: IEC 62629-22-1 2016

Figure 14 – Spatial luminance data acquisition (left) and example of calculated spatial crosstalk graph (right) ..... 26
Figure 15 – Example of minimum luminance and maximum luminance for offset crosstalk ..... 29
Figure 16 – Example of adjacent overlap ..... 30
Figure 17 – Example of slanted lens configuration where 4,688 sub-pixels in a row are covered in one lens pitch ..... 31
Figure 18 – Measuring layout example for 3D pixel crosstalk for multi-view displays having dozens of perspective output images ..... 32
Figure 19 – Example of luminance angular profile for a multi-view display having 28 views (perspective images) ..... 33
Figure A.1 – Structure of two-view display ..... 35
Figure A.2 – Basic principle of two-view display ..... 36
Figure A.3 – Structure of multi-view display ..... 36
Figure A.4 – Basic principle of multi-view display ..... 37
Figure A.5 – Basic principle of integral imaging display ..... 37
Figure B.1 – Example of angular profile of luminance ..... 39
Figure C.1 – Example image of a traditional multi-view display ..... 40
Figure C.2 – Example image of the multi-view display having at least one view within one IPD ..... 40
Figure C.3 – Example of luminance angular profile for a multi-view display having at least one view within one IPD (at designed viewing distance = 3,878 m) ..... 42

Table 1 – Example of reported specification of two-dimensional LMD ..... 9
Table 2 – Example of measurement results for maximum luminance direction ..... 16
Table 3 – Example of measurement results for lobe angle variation on screen ..... 18
Table 4 – Example of measurement results for luminance and screen luminance non-uniformity ..... 19
Table 5 – Example of measurement results for angular luminance variation ..... 20
Table 6 – Example of measurement results for white chromaticity and white chromaticity uniformity on screen ..... 22
Table 7 – Example of measurement results for white chromaticity variation in angle ..... 23
Table 8 – Example of measurement results for 3D crosstalk variation on screen ..... 27
Table 9 – Example of measurement results for 3D crosstalk angular variation ..... 28
Table 10 – Example of measurement results for offset crosstalk ..... 30
Table 11 – Example of 3D pixel crosstalk calculation results ..... 34
Table B.1 – Example of measurement results ..... 39
Table C.1 – Example of measurement results for 3D crosstalk based on one IPD ..... 43
Table D.1 – Example of measurement results for motion parallax smoothness ..... 45

Documents
Document Sharing Hub
Full document details: IEC 62629-22-1 2016

INTERNATIONAL ELECTROTECHNICAL COMMISSION

# 3D DISPLAY DEVICES –

## Part 22-1: Measuring methods for autostereoscopic displays – Optical

## FOREWORD

1) The International Electrotechnical Commission (IEC) is a worldwide organization for standardization comprising all national electrotechnical committees (IEC National Committees). The object of IEC is to promote international co-operation on all questions concerning standardization in the electrical and electronic fields. To this end and in addition to other activities, IEC publishes International Standards, Technical Specifications, Technical Reports, Publicly Available Specifications (PAS) and Guides (hereafter referred to as "IEC Publication(s)"). Their preparation is entrusted to technical committees; any IEC National Committee interested in the subject dealt with may participate in this preparatory work. International, governmental and non-governmental organizations liaising with the IEC also participate in this preparation. IEC collaborates closely with the International Organization for Standardization (ISO) in accordance with conditions determined by agreement between the two organizations.
2) The formal decisions or agreements of IEC on technical matters express, as nearly as possible, an international consensus of opinion on the relevant subjects since each technical committee has representation from all interested IEC National Committees.
3) IEC Publications have the form of recommendations for international use and are accepted by IEC National Committees in that sense. While all reasonable efforts are made to ensure that the technical content of IEC Publications is accurate, IEC cannot be held responsible for the way in which they are used or for any misinterpretation by any end user.
4) In order to promote international uniformity, IEC National Committees undertake to apply IEC Publications transparently to the maximum extent possible in their national and regional publications. Any divergence between any IEC Publication and the corresponding national or regional publication shall be clearly indicated in the latter.
5) IEC itself does not provide any attestation of conformity. Independent certification bodies provide conformity assessment services and, in some areas, access to IEC marks of conformity. IEC is not responsible for any services carried out by independent certification bodies.
6) All users should ensure that they have the latest edition of this publication.
7) No liability shall attach to IEC or its directors, employees, servants or agents including individual experts and members of its technical committees and IEC National Committees for any personal injury, property damage or other damage of any nature whatsoever, whether direct or indirect, or for costs (including legal fees) and expenses arising out of the publication, use of, or reliance upon, this IEC Publication or any other IEC Publications.
8) Attention is drawn to the Normative references cited in this publication. Use of the referenced publications is indispensable for the correct application of this publication.
9) Attention is drawn to the possibility that some of the elements of this IEC Publication may be the subject of patent rights. IEC shall not be held responsible for identifying any or all such patent rights.

International Standard IEC 62629-22-1 has been prepared by IEC technical committee 110: Electronic display devices.

This second edition cancels and replaces the first edition published in 2013. This edition constitutes a technical revision.

This edition includes the following significant technical changes with respect to the previous edition:

a) addition of offset crosstalk and 3D pixel crosstalk as 3D crosstalk related property.

Documents
Document Sharing Hub

Full document details: IEC 62629-22-1 2016

The text of this standard is based on the following documents:

| FDIS | Report on voting |
|---|---|
| 110/784/FDIS | 110/797/RVD |

Full information on the voting for the approval of this standard can be found in the report on voting indicated in the above table.

This publication has been drafted in accordance with the ISO/IEC Directives, Part 2.

A list of all the parts in the IEC 62629 series, under the general title *3D display devices*, can be found on the IEC website.

The committee has decided that the contents of this publication will remain unchanged until the stability date indicated on the IEC website under "http://webstore.iec.ch" in the data related to the specific publication. At this date, the publication will be

- reconfirmed,
- withdrawn,
- replaced by a revised edition, or
- amended.

A bilingual version of this publication may be issued at a later date.

Documents
Document Sharing Hub

Full document details: IEC 62629-22-1 2016

# 3D DISPLAY DEVICES –

# Part 22-1: Measuring methods for autostereoscopic displays – Optical

## 1 Scope

This part of IEC 62629-22 specifies optical measuring methods for autostereoscopic display devices. It defines general measuring procedures for optical characteristics of two-view and multi-view displays and integral imaging displays.

## 2 Normative references

The following documents are referred to in the text in such a way that some or all of their content constitutes requirements of this document. For dated references, only the edition cited applies. For undated references, the latest edition of the referenced document (including any amendments) applies.

IEC 62629-1-2, *3D display devices – Part 1-2: Generic – Terminology and letter symbols*

ISO/CIE 19476, *Characterization of the performance of illuminance meters and luminance meters*

CIE 15:2004, *Colorimetry*

## 3 Terms, definitions and abbreviated terms

### 3.1 Terms and definitions

For the purposes of this document, the terms and definitions given in IEC 62629-1-2 and the following apply.

ISO and IEC maintain terminological databases for use in standardization at the following addresses:

- IEC Electropedia: available at http://www.electropedia.org/
- ISO Online browsing platform: available at http://www.iso.org/obp

**3.1.1**
**3D pixel crosstalk**
pixel crosstalk by horizontal pixels for one lens pitch

### 3.2 Abbreviated terms

For the purposes of this document, the following abbreviated terms apply.

| | |
|---|---|
| CCD | charge-coupled device |
| DVD | designed viewing distance |
| FPD | flat panel display |
| FWHM | full width half maximum |
| FWTQM | full width at three-quarter maximum |
| IPD | inter pupil distance |

Documents
Document Sharing Hub
Full document details: IEC 62629-22-1 2016

LMD light measuring device

# 4 Standard measuring conditions

## 4.1 Standard environmental conditions

### 4.1.1 Temperature, humidity and pressure conditions

Standard environmental conditions shall be applied for the measurements of autostereoscopic display devices.

The standard environmental conditions for the measurements of autostereoscopic display devices are (25 ± 5) °C temperature, 45 % to 75 % relative humidity, and 86 kPa to 106 kPa pressure.

### 4.1.2 Illumination conditions

Standard dark room conditions shall be applied.

In standard dark room conditions, the illuminance at any position on the screen (the display device screen) is below 0,3 lx in all directions.

NOTE Illuminance is measured without the measured display or in conditions where the display is turned off.

## 4.2 Light measuring device

### 4.2.1 General

The LMD used for measurements of the displays shall be checked for the following criteria and specified accordingly:

- aperture size (window function of LMD) (see 4.2.2);
- sensitivity of the measured quantity;
- errors caused by veiling glare and lens flare (i.e. stray light in optical system);
- timing of data acquisition, low-pass filtering and aliasing effects;
- linearity of detection and data-conversion;
- resolution and moiré when using a two-dimensional LMD.

A point-measurement LMD, such as a spot luminance meter, or a two-dimensional LMD such as a CCD area detector, shall be used for these measurements. A conoscopic type LMD can be used for some measurements. When a two-dimensional LMD and/or a conoscopic type LMD is/are used, they shall be calibrated so that the measurement results correspond to those of the point-measurement LMD. The specification of the LMD used shall be noted in the report as in the example shown in Table 1.

NOTE 1 The point-measurement LMD measures the luminance and/or colour coordinate at each measurement point on the screen. A two-dimensional LMD measures the map of luminance and/or colour coordinate over the measurement area of the screen. A conoscopic type LMD measures the directional characteristics of luminance and/or colour coordinate at each measurement point on the screen.

NOTE 2 A point-measurement LMD usually has higher sensitivity than a two-dimensional LMD. A two-dimensional LMD measures the uniformity of the measuring area more easily than a point-measurement LMD.

Documents
Document Sharing Hub
Full document details: IEC 62629-22-1 2016

**Table 1 – Example of reported specification of two-dimensional LMD**

| | | |
|---|---|---|
| CCD resolution | 4 096 × 2 048 | |
| CCD A/D dynamic range | More than 12 bits = 4 096 gray scale levels | |
| Wavelength range | 380 nm to 780 nm | |
| System accuracy | Luminance variation | ± 3 % |
| | CIE 1931 chromaticity coordinates ($x$, $y$) | ± 0,003 |
| Colorimetric filters | CIE 1931 colour matching functions for a 2° observer | |

### 4.2.2 Aperture size

The aperture size (entrance pupil, see ISO/CIE 19476) of an LMD, including point-measurement and two-dimensional type LMDs (smaller than the size of the object lens of the LMD), shall be equal to or smaller than 8 mm. When a larger aperture LMD is used, the measurement results shall be checked so that the results are equivalent to those of the smaller aperture LMD. The aperture size shall be reported by the supplier (the manufacturer of the 3D display device) in the relevant specification.

NOTE In the measurement of autostereoscopic displays, the aperture size of the LMD greatly affects the measurement results. So the LMD aperture size is defined in this document. The aperture size similar to the size of the pupil of an eye is ideal for the measurements (e.g. crosstalk), but a smaller aperture decreases the sensitivity. The size of 8 mm is small enough for the measurement and large enough for the sensitivity. The exact value of the aperture size of the LMD used will be informed by the LMD supplier. The relation among the aperture size, measuring area size and measuring distance is shown in Figure 1 and explained in 4.3. When a larger aperture LMD is used, the measuring distance is increased as long as the measuring distance does not affect the measurement results by changing the measuring distance.

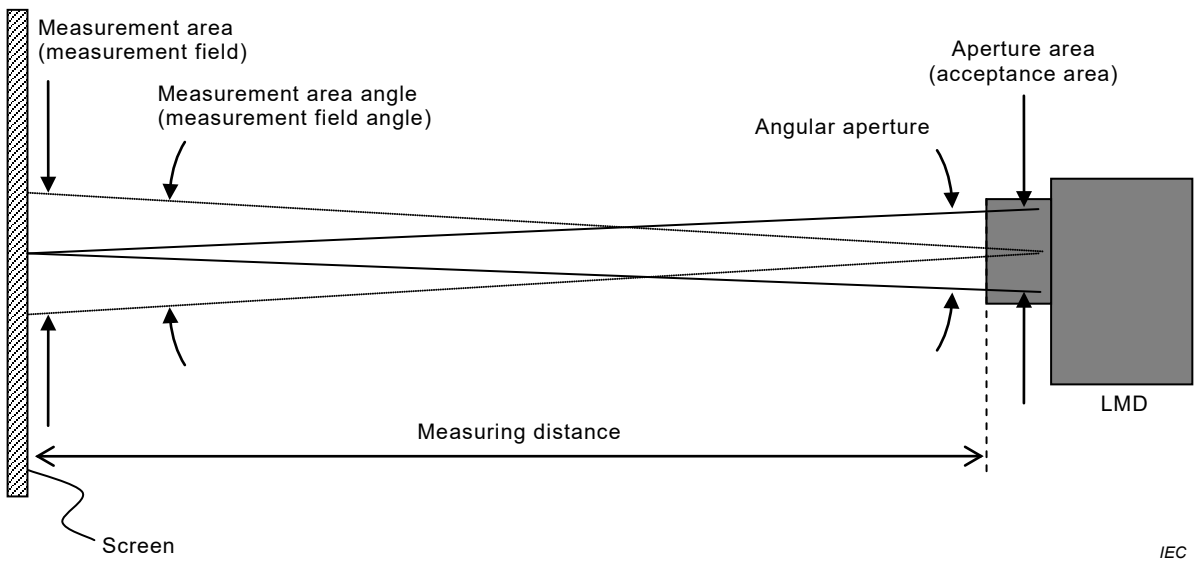


**Figure 1 – Measuring system**

## 4.3 Measuring setup

### 4.3.1 Designed viewing distance

A DVD shall be defined by the supplier in the relevant specification. The DVD is the distance from which proper stereoscopic views are intended to be observed and/or the characteristics of an autostereoscopic display are measured accurately.

For the measurements, the designed viewing distance shall be applied as the measuring distance. The measuring distance shall be fixed when items planned to be evaluated are

AVA Documents
Document Sharing Hub
Full document details: IEC 62629-22-1 2016

measured. Only one designed viewing distance shall be defined and applied to an autostereoscopic display device.

### 4.3.2 Measurement area

The LMD shall be set at a proper measurement area angle (measurement field angle, see Figure 1) less than or equal to 2°, and shall have a measurement area of at least 500 pixels whose diameter is less than 10 % of the screen height. This area corresponds to having a circular measurement area of at least 26 lines in diameter when the screen has a square pixel consisting of 3 subpixels. If the above conditions cannot be applied, the applied measurement area shall include as many pixels as possible. The applied measuring conditions shall be noted in the report.

NOTE Based on the information given by the supplier, such as number of views and lobe angle, the measurement field angle, aperture angle and measuring distance are determined. The aperture angle is small so that the angular luminance profile can be measured precisely. In general, the more the number of views increases, the smaller the required aperture angle is. In theory, when a smaller aperture is applied, a smaller field angle is desirable. In addition, some autostereoscopic displays are designed so that the screen produces different distribution of light rays to improve 3D observation. When considering these points, the field angle is introduced. The range of measuring distance is decided by the size of the aperture and measurement field. The measuring distance and the field angle are adjusted to achieve a viewing area greater than 500 pixels, whose diameter is less than 10 % of the screen height, if it is difficult to set the field angle above.

### 4.3.3 Measuring layout

#### 4.3.3.1 Centre point measurement

The measuring layout for a centre point measurement is shown in Figure 2. The aperture of the LMD shall be set at the designed viewing distance.

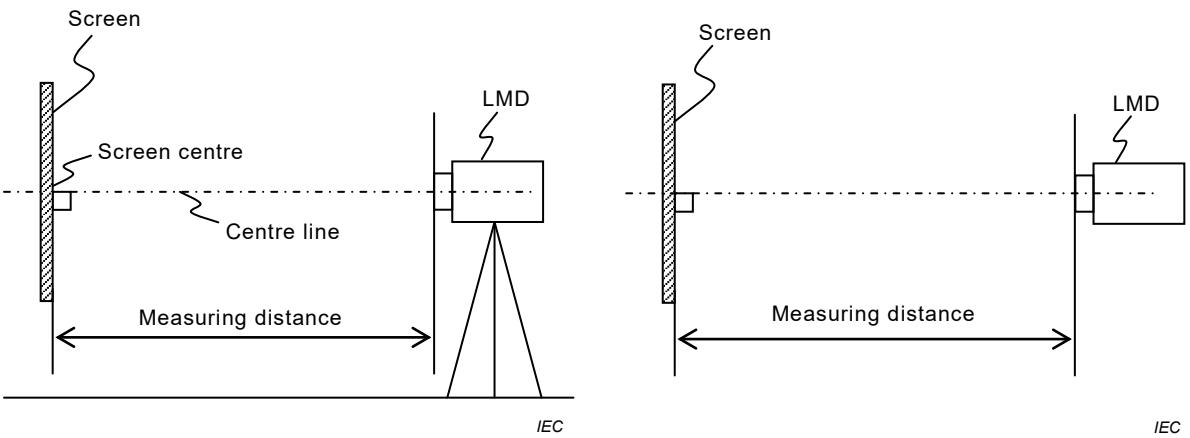


**a) Side view** **b) Top view**

**Figure 2 – Measuring layout for centre point measurement**

#### 4.3.3.2 Multi-point measurement

The measuring layout for a multi-point measurement is shown in Figure 3. When a multi-point measurement is carried out using the two-dimensional LMD, the measuring layout shown in Figure 2 shall be applied. In this case the measurement result shall be confirmed to be the same as that measured by the multi-point measurement shown in Figure 3.

Documents
Document Sharing Hub
Full document details: IEC 62629-22-1 2016

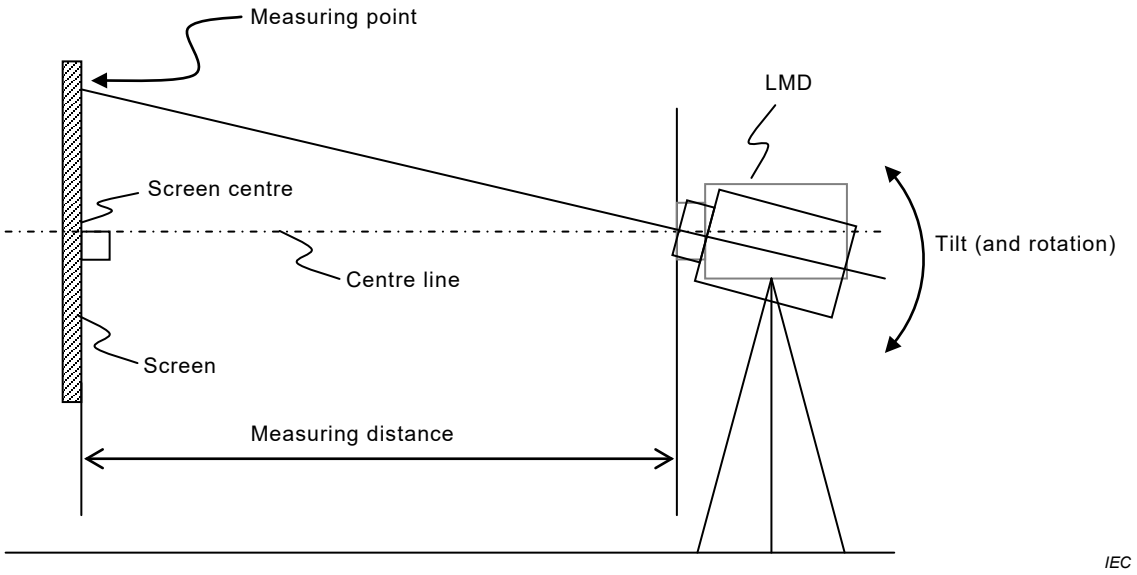


NOTE A similar layout is applied to the measurement with rotation.

**Figure 3 – Measuring layout for multi-point measurement (side view)**

The measuring layout shown in Figure 4 can also be applied to certain measuring items. This layout is suitable for certain measuring items where the display does not strongly depend on LMD positions (i.e. integral imaging display). The layout used for the measurement shall be noted in the report. When a different measuring layout is used, this shall be noted in the report.

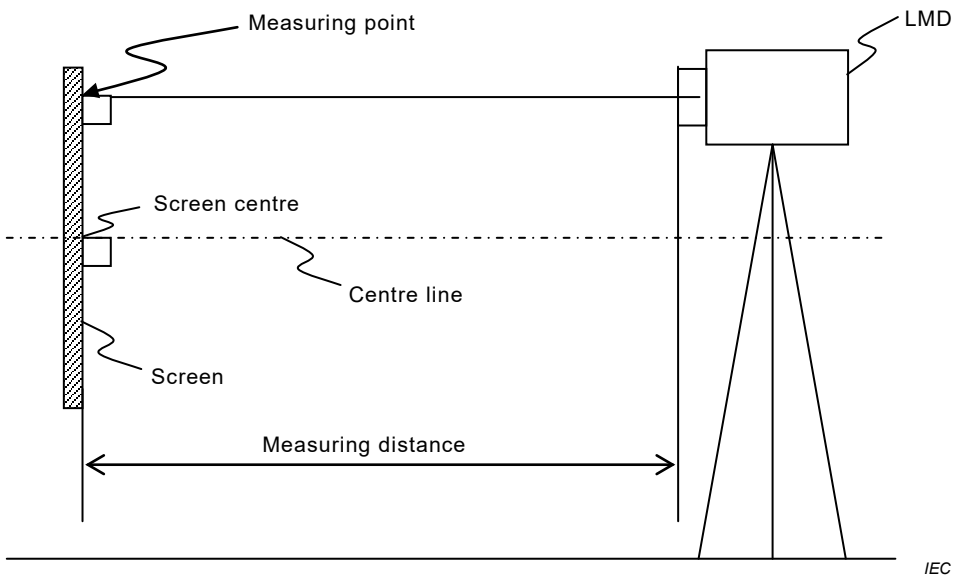


**Figure 4 – Other measuring layout for multi-point measurement (side view)**

#### 4.3.3.3 Measurement of viewing direction dependency

To measure viewing direction dependency, the characteristics at the centre of the screen are measured from the vertical or horizontal viewing directions defined in each measurement method or relevant specification, as shown in Figure 5 and Figure 6. Instead of moving the LMD, the autostereoscopic display can be tilted vertically or turned horizontally to be measured as shown in Figure 5 b) and Figure 6 b). The horizontal and vertical measuring angular ranges and angular scanning steps shall be defined by the supplier in the relevant specification, and shall be noted in the report.

AVA Documents
Document Sharing Hub
Full document details: IEC 62629-22-1 2016

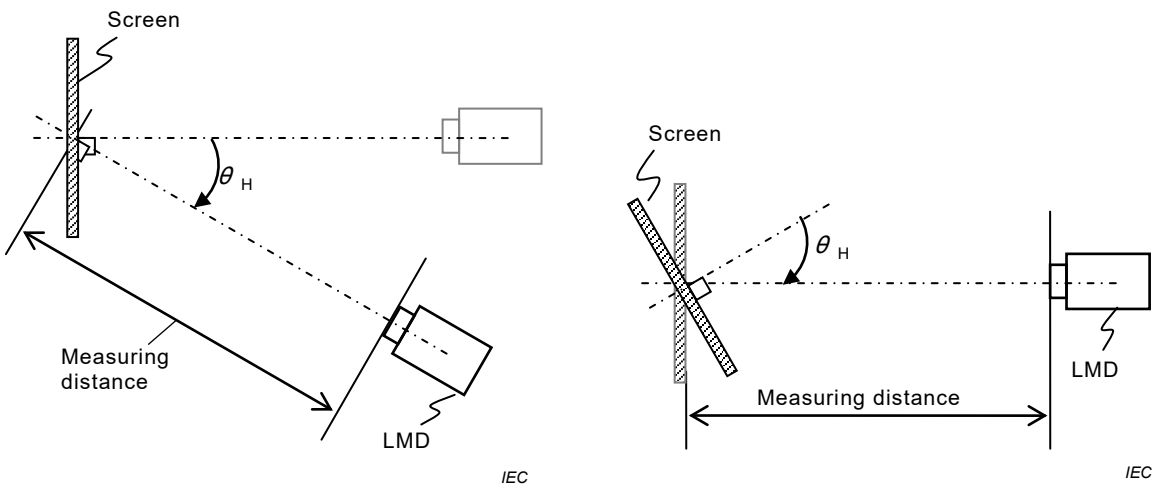


**a) Movement of LMD (top view)** **b) Rotation of display (top view)**

**Figure 5 – Measuring layout for horizontal viewing direction dependency**

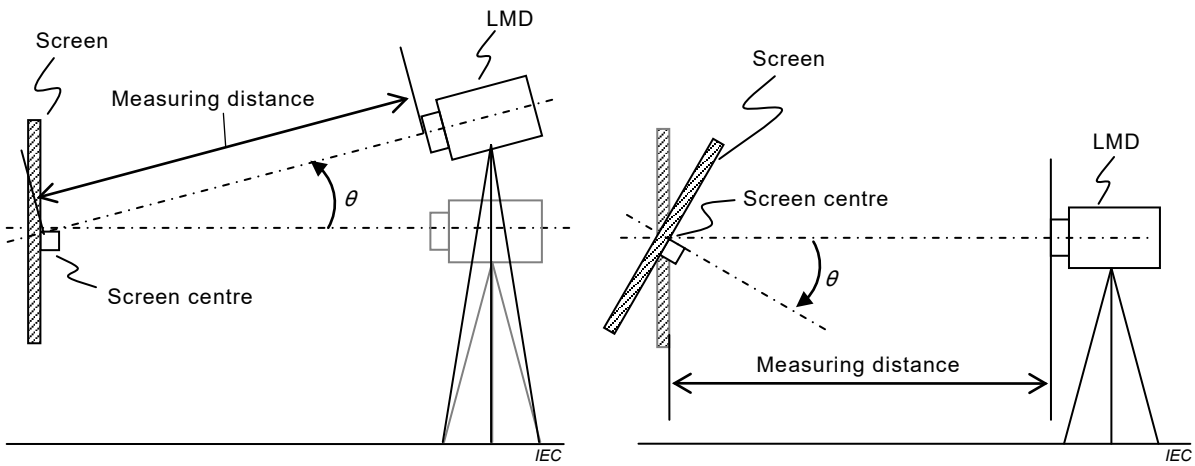


**a) Movement of LMD (side view)** **b) Tilt of display (side view)**

**Figure 6 – Measuring layout for vertical viewing direction dependency**

## 4.4 Test signal

The all-pixel white signal, all-pixel black signal, and $i^{th}$-pixel white signal are defined below:

a) $Im_{\text{all white}}$: all-pixel white signal (at 100 % level) or all-pixel white

NOTE 1 The all-pixel white signal denotes that all pixels on the screen are activated by the input of level 100 %.

b) $Im_{\text{all black}}$: all-pixel black signal (at 0 % level) or all-pixel black

NOTE 2 The all-pixel black signal denotes that all pixels on the screen are suppressed by the input of level 0 %.

c) $Im_i$: $i^{th}$ -pixel white signal (at 100 % level) with the other pixel blackened or $i^{th}$ -pixel white,where $i$ is 1 to $N$ (see Figure 7) and $N$ is the number of views (multi views). For temporal use, the $i^{th}$ light ray white signal (at 100 % level) with the other light rays blackened or the $i^{th}$ light ray white can be used.

NOTE 3 The $i^{th}$ pixel white signal indicates that only $i^{th}$ pixels in the group are activated by the input of 100 % level.

NOTE 4 Light ray is explained in Annex A.

The signal details of signals for the $i$ $^{th}$-pixel white signal, or the details of the pixels and lenslet as shown in Figure 7 shall be described by the supplier in the relevant specification.

AVA Documents Document Sharing Hub

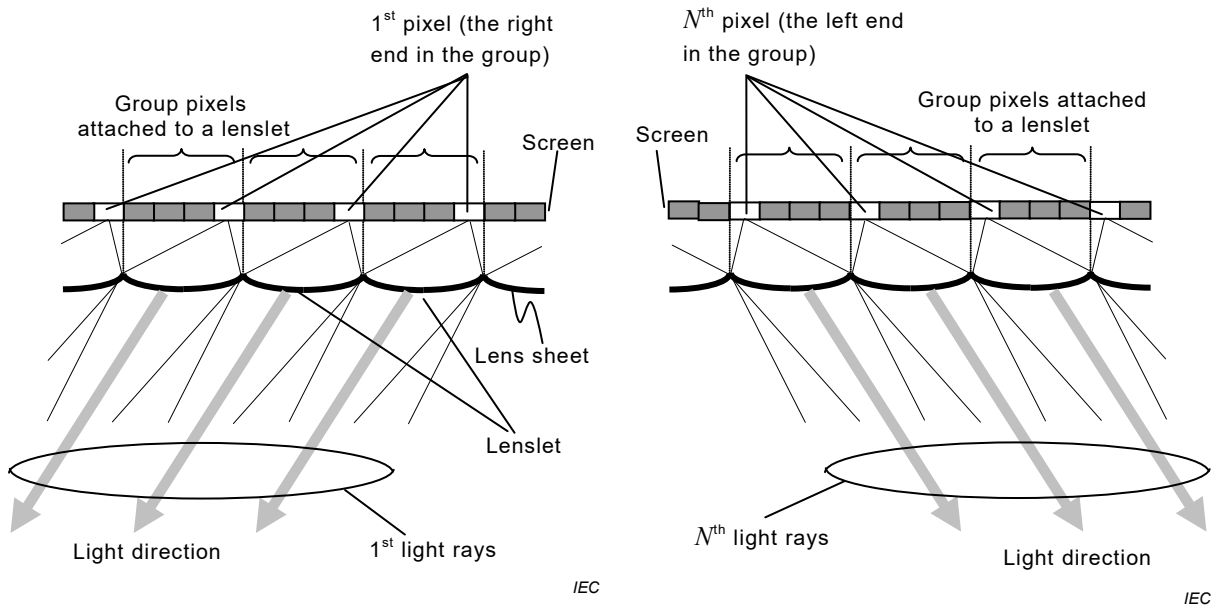


**Key** ▭: pixel at level 100 %, ▬: pixel at level 0 %, $Im_1$ and $Im_N$ are 1st and $N$th pixel white signals

**a) Test image ($Im_1$)** **b) Test image ($Im_N$)**

NOTE As shown in a), every pixel at the right end in the group (every 1st pixel) is at level 100 %, and as shown in b), so is every pixel on the left end in the group (every $N$th pixel).

**Figure 7 – Two examples of the relation between pixel and lenslet in multi-view display**

## 4.5 Standard measuring points

The centre point (one-point) and multi-point (three-point, five-point or nine-point) measurements are applied. The measuring points are shown in Figure 8. The measuring point of one-point measurement is named $P_0$. In multi-point measurements the three points are $P_0$, $P_6$ and $P_8$, the five points and nine points are from $P_0$ to $P_4$ and from $P_0$ to $P_8$, respectively.

The $n$ by $m$ points for 3D crosstalk variation on screen are shown in Figure 9. The applied number of measuring points ($n$ by $m$) shall be defined by the supplier in the relevant specification.

The applied measuring points are defined in each measurement item. If other measuring points are applied, this shall be defined by the supplier in the relevant specification.

NOTE One-point measurement is carried out to obtain the typical characteristics at the centre of the screen. Others are carried out to obtain deviations, averages and uniformities.

Documents
Document Sharing Hub
Full document details: IEC 62629-22-1 2016