IEC 62631-3-3

Edition 1.0 2015-12

INTERNATIONAL STANDARD

NORME INTERNATIONALE

Dielectric and resistive properties of solid insulating materials – Part 3-3: Determination of resistive properties (DC methods) – Insulation resistance

Propriétés diélectriques et résistives des matériaux isolants solides – Partie 3-3: Détermination des propriétés résistives (méthodes en courant continu) – Résistance d'isolement

IEC 62631-3-3:2015-12(en-fr)

Documents
Document Sharing Hub
Full document details: IEC 62631-3-3 2015

THIS PUBLICATION IS COPYRIGHT PROTECTED

Copyright © 2015 IEC, Geneva, Switzerland

All rights reserved. Unless otherwise specified, no part of this publication may be reproduced or utilized in any form or by any means, electronic or mechanical, including photocopying and microfilm, without permission in writing from either IEC or IEC's member National Committee in the country of the requester. If you have any questions about IEC copyright or have an enquiry about obtaining additional rights to this publication, please contact the address below or your local IEC member National Committee for further information.

Droits de reproduction réservés. Sauf indication contraire, aucune partie de cette publication ne peut être reproduite ni utilisée sous quelque forme que ce soit et par aucun procédé, électronique ou mécanique, y compris la photocopie et les microfilms, sans l'accord écrit de l'IEC ou du Comité national de l'IEC du pays du demandeur. Si vous avez des questions sur le copyright de l'IEC ou si vous désirez obtenir des droits supplémentaires sur cette publication, utilisez les coordonnées ci-après ou contactez le Comité national de l'IEC de votre pays de résidence.

IEC Central Office
3, rue de Varembé
CH-1211 Geneva 20
Switzerland

Tel.: +41 22 919 02 11
Fax: +41 22 919 03 00
info@iec.ch
www.iec.ch

About the IEC
The International Electrotechnical Commission (IEC) is the leading global organization that prepares and publishes International Standards for all electrical, electronic and related technologies.

About IEC publications
The technical content of IEC publications is kept under constant review by the IEC. Please make sure that you have the latest edition, a corrigenda or an amendment might have been published.

IEC Catalogue - webstore.iec.ch/catalogue
The stand-alone application for consulting the entire bibliographical information on IEC International Standards, Technical Specifications, Technical Reports and other documents. Available for PC, Mac OS, Android Tablets and iPad.

IEC publications search - www.iec.ch/searchpub
The advanced search enables to find IEC publications by a variety of criteria (reference number, text, technical committee,…). It also gives information on projects, replaced and withdrawn publications.

IEC Just Published - webstore.iec.ch/justpublished
Stay up to date on all new IEC publications. Just Published details all new publications released. Available online and also once a month by email.

Electropedia - www.electropedia.org
The world's leading online dictionary of electronic and electrical terms containing more than 30 000 terms and definitions in English and French, with equivalent terms in 15 additional languages. Also known as the International Electrotechnical Vocabulary (IEV) online.

IEC Glossary - std.iec.ch/glossary
More than 60 000 electrotechnical terminology entries in English and French extracted from the Terms and Definitions clause of IEC publications issued since 2002. Some entries have been collected from earlier publications of IEC TC 37, 77, 86 and CISPR.

IEC Customer Service Centre - webstore.iec.ch/csc
If you wish to give us your feedback on this publication or need further assistance, please contact the Customer Service Centre: csc@iec.ch.

A propos de l'IEC
La Commission Electrotechnique Internationale (IEC) est la première organisation mondiale qui élabore et publie des Normes internationales pour tout ce qui a trait à l'électricité, à l'électronique et aux technologies apparentées.

A propos des publications IEC
Le contenu technique des publications IEC est constamment revu. Veuillez vous assurer que vous possédez l'édition la plus récente, un corrigendum ou amendement peut avoir été publié.

Catalogue IEC - webstore.iec.ch/catalogue
Application autonome pour consulter tous les renseignements bibliographiques sur les Normes internationales, Spécifications techniques, Rapports techniques et autres documents de l'IEC. Disponible pour PC, Mac OS, tablettes Android et iPad.

Recherche de publications IEC - www.iec.ch/searchpub

La recherche avancée permet de trouver des publications IEC en utilisant différents critères (numéro de référence, texte, comité d'études,…). Elle donne aussi des informations sur les projets et les publications remplacées ou retirées.

IEC Just Published - webstore.iec.ch/justpublished

Restez informé sur les nouvelles publications IEC. Just Published détaille les nouvelles publications parues. Disponible en ligne et aussi une fois par mois par email.

Electropedia - www.electropedia.org

Le premier dictionnaire en ligne de termes électroniques et électriques. Il contient plus de 30 000 termes et définitions en anglais et en français, ainsi que les termes équivalents dans 15 langues additionnelles. Egalement appelé Vocabulaire Electrotechnique International (IEV) en ligne.

Glossaire IEC - std.iec.ch/glossary
Plus de 60 000 entrées terminologiques électrotechniques, en anglais et en français, extraites des articles Termes et Définitions des publications IEC parues depuis 2002. Plus certaines entrées antérieures extraites des publications des CE 37, 77, 86 et CISPR de l'IEC.

Service Clients - webstore.iec.ch/csc

Si vous désirez nous donner des commentaires sur cette publication ou si vous avez des questions contactez-nous: csc@iec.ch.

Documents
Document Sharing Hub

Full document details: IEC 62631-3-3 2015

IEC 62631-3-3

Edition 1.0 2015-12

INTERNATIONAL STANDARD

NORME INTERNATIONALE

Dielectric and resistive properties of solid insulating materials – Part 3-3: Determination of resistive properties (DC methods) – Insulation resistance

Propriétés diélectriques et résistives des matériaux isolants solides – Partie 3-3: Détermination des propriétés résistives (méthodes en courant continu) – Résistance d'isolement

INTERNATIONAL
ELECTROTECHNICAL
COMMISSION

COMMISSION
ELECTROTECHNIQUE
INTERNATIONALE

ICS 17.220.99; 29.035.01

ISBN 978-2-8322-3024-4

Warning! Make sure that you obtained this publication from an authorized distributor.
Attention! Veuillez vous assurer que vous avez obtenu cette publication via un distributeur agréé.

® Registered trademark of the International Electrotechnical Commission
Marque déposée de la Commission Electrotechnique Internationale

Documents
Document Sharing Hub

Full document details: IEC 62631-3-3 2015

CONTENTS

FOREWORD ... 3
1 Scope ... 5
2 Normative references ... 5
3 Terms and definitions ... 5
4 Significance ... 8
5 Method of test ... 9
5.1 General ... 9
5.2 Test conditions ... 9
5.2.1 Voltage ... 9
5.2.2 Electrode material ... 9
5.3 Equipment ... 10
5.3.1 General ... 10
5.3.2 Accuracy ... 10
5.3.3 Voltage source ... 10
5.4 Calibration ... 10
5.5 Test specimen ... 11
5.5.1 Dimensions of test specimen ... 11
5.5.2 Test specimen for insulating resistance between tapered pin electrodes ... 11
5.5.3 Test specimen for insulating resistance between bar electrodes ... 11
5.5.4 Manufacturing of test specimen ... 11
5.5.5 Number of test specimen ... 12
5.5.6 Conditioning and pre-treatment of test specimen ... 12
5.6 Electrode application ... 12
5.6.1 Application of tapered pin electrodes ... 12
5.6.2 Application of bar electrodes ... 13
5.7 Test procedure ... 14
5.8 Evaluation ... 14
5.8.1 Insulating resistance between tapered pin electrodes ... 14
5.8.2 Insulating resistance between bar electrodes ... 14
6 Test report ... 14
7 Repeatability and reproducibility ... 15
Bibliography ... 16

Figure 1 – Pin electrode arrangements ... 6
Figure 2 – Bar electrode arrangement ... 7
Figure 3 – Specimen for measurement of the insulation resistance R_I between plugs ... 13

Table 1 – Composition of electrode steel ... 10

Documents
Document Sharing Hub

Full document details: IEC 62631-3-3 2015

INTERNATIONAL ELECTROTECHNICAL COMMISSION

DIELECTRIC AND RESISTIVE PROPERTIES OF SOLID INSULATING MATERIALS –

Part 3-3: Determination of resistive properties (DC methods) – Insulation resistance

FOREWORD

1) The International Electrotechnical Commission (IEC) is a worldwide organization for standardization comprising all national electrotechnical committees (IEC National Committees). The object of IEC is to promote international co-operation on all questions concerning standardization in the electrical and electronic fields. To this end and in addition to other activities, IEC publishes International Standards, Technical Specifications, Technical Reports, Publicly Available Specifications (PAS) and Guides (hereafter referred to as "IEC Publication(s)"). Their preparation is entrusted to technical committees; any IEC National Committee interested in the subject dealt with may participate in this preparatory work. International, governmental and non-governmental organizations liaising with the IEC also participate in this preparation. IEC collaborates closely with the International Organization for Standardization (ISO) in accordance with conditions determined by agreement between the two organizations.
2) The formal decisions or agreements of IEC on technical matters express, as nearly as possible, an international consensus of opinion on the relevant subjects since each technical committee has representation from all interested IEC National Committees.
3) IEC Publications have the form of recommendations for international use and are accepted by IEC National Committees in that sense. While all reasonable efforts are made to ensure that the technical content of IEC Publications is accurate, IEC cannot be held responsible for the way in which they are used or for any misinterpretation by any end user.
4) In order to promote international uniformity, IEC National Committees undertake to apply IEC Publications transparently to the maximum extent possible in their national and regional publications. Any divergence between any IEC Publication and the corresponding national or regional publication shall be clearly indicated in the latter.
5) IEC itself does not provide any attestation of conformity. Independent certification bodies provide conformity assessment services and, in some areas, access to IEC marks of conformity. IEC is not responsible for any services carried out by independent certification bodies.
6) All users should ensure that they have the latest edition of this publication.
7) No liability shall attach to IEC or its directors, employees, servants or agents including individual experts and members of its technical committees and IEC National Committees for any personal injury, property damage or other damage of any nature whatsoever, whether direct or indirect, or for costs (including legal fees) and expenses arising out of the publication, use of, or reliance upon, this IEC Publication or any other IEC Publications.
8) Attention is drawn to the Normative references cited in this publication. Use of the referenced publications is indispensable for the correct application of this publication.
9) Attention is drawn to the possibility that some of the elements of this IEC Publication may be the subject of patent rights. IEC shall not be held responsible for identifying any or all such patent rights.

International Standard IEC 62631-3-3 has been prepared by IEC technical committee 112: Evaluation and qualification of electrical insulating materials and systems.

This first edition cancels and replaces the first edition of IEC 60167, published in 1964, and constitutes a technical revision.

This edition includes the following significant technical changes with respect to the first edition of IEC 60167:

a) IEC 60167 has been completely revised, both editorially and technically, and incorporated into the new IEC 62631 series;
b) test methods have been updated to current day state of the art.

Documents
Document Sharing Hub

Full document details: IEC 62631-3-3 2015

The text of this standard is based on the following documents:

FDIS	Report on voting
112/341/FDIS	112/352/RVD

Full information on the voting for the approval of this standard can be found in the report on voting indicated in the above table.

This publication has been drafted in accordance with the ISO/IEC Directives, Part 2.

A list of all parts in the IEC 62631 series, published under the general title *Dielectric and resistive properties of solid insulating materials*, can be found on the IEC website.

The committee has decided that the contents of this publication will remain unchanged until the stability date indicated on the IEC website under "http://webstore.iec.ch" in the data related to the specific publication. At this date, the publication will be

- reconfirmed,
- withdrawn,
- replaced by a revised edition, or
- amended.

Documents
Document Sharing Hub

Full document details: IEC 62631-3-3 2015

DIELECTRIC AND RESISTIVE PROPERTIES OF SOLID INSULATING MATERIALS –

Part 3-3: Determination of resistive properties (DC methods) – Insulation resistance

1 Scope

This part of IEC 62631 covers methods of test for the determination of the insulation resistance of electrical insulating materials or insulating systems by applying DC voltage.

2 Normative references

The following documents, in whole or in part, are normatively referenced in this document and are indispensable for its application. For dated references, only the edition cited applies. For undated references, the latest edition of the referenced document (including any amendments) applies.

IEC 60212, *Standard conditions for use prior to and during the testing of solid electrical insulating materials*

IEC 60216-4-1, *Electrical insulating materials – Thermal endurance properties – Part 4-1: Ageing ovens – Single-chamber ovens*

ISO 2339, *Taper pins, unhardened*

ISO 3465, *Hand taper pin reamers*

3 Terms and definitions

For the purposes of this document, the following terms and definitions apply.

3.1
electrode arrangement
arrangement of two electrically conductive bodies in contact with the surface and the bulk volume of a test specimen

3.1.1
tapered pin electrodes
electrode arrangement using tapered pin electrodes

Note 1 to entry: See Figure 1.

3.1.2
bar electrodes
electrode arrangement using bar electrodes

Note 1 to entry: See Figure 2.

Documents
Document Sharing Hub

Full document details: IEC 62631-3-3 2015

Dimensions in millimetres

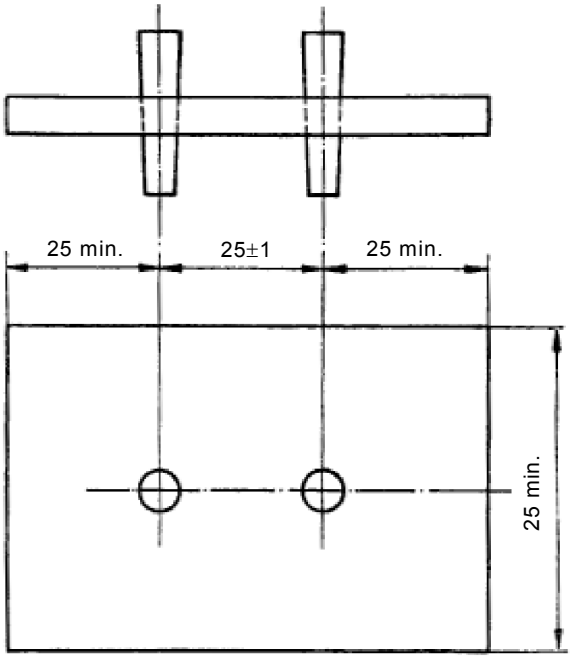

IEC

Figure 1a – Test specimen arrangement for plates

Dimensions in millimetres

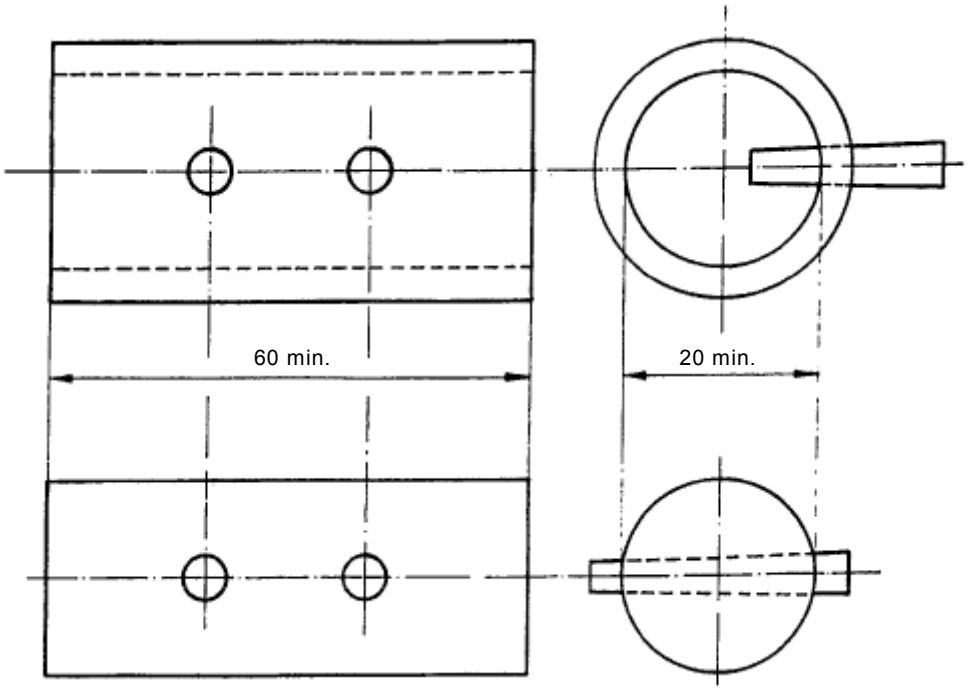

IEC

Figure 1b – Test specimen arrangement for pipes and rods

Figure 1 – Pin electrode arrangements

Documents
Document Sharing Hub
Full document details: IEC 62631-3-3 2015

Dimensions in millimetres

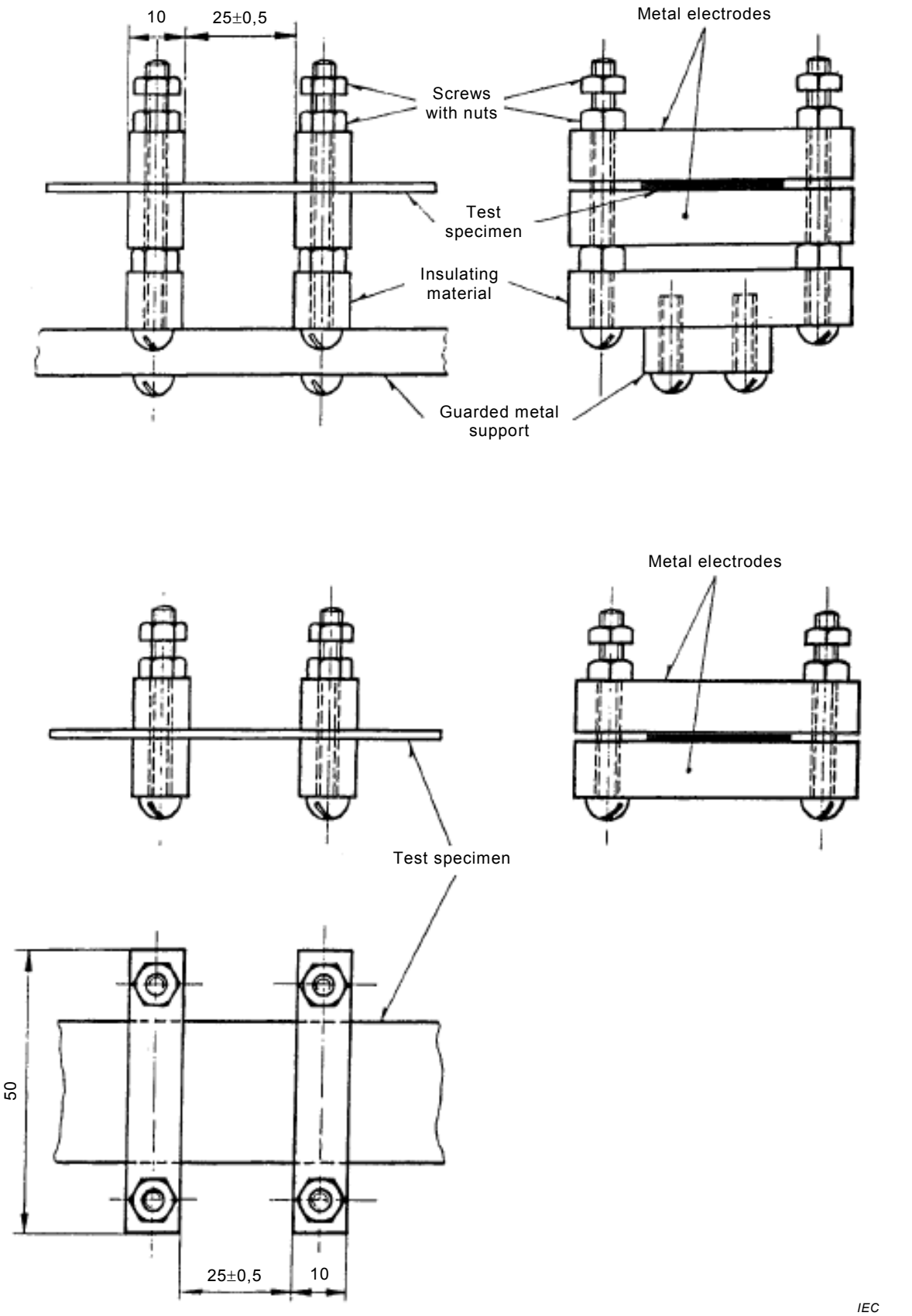

Figure 2 – Bar electrode arrangement

Documents
Document Sharing Hub
Full document details: IEC 62631-3-3 2015

3.2
measured resistance
ratio of DC voltage applied to an electrode arrangement in contact with a test specimen to the current between them measured with sufficient precision

Note 1 to entry: A Wheatstone bridge may also be used to compare the measured resistor with a standard resistor. However, Wheatstone bridges are not commonly used anymore.

Note 2 to entry: According to IEC 60050-121[1][1]: Electromagnetism, "conductivity" is defined as "scalar or tensor quantity the product of which by the electric field strength in a medium is equal to the electric current density" and "resistivity" as "the inverse of the conductivity when this inverse exists". Measured in this way, the insulating resistance is an average of the integrated resistivity over possible heterogeneities in the volume incorporated in the measurement; it includes the effect of possible polarization phenomena at the electrodes.

3.3
insulation resistance
R_I
measured resistance between any electrode arrangement defined by this standard

Note 1 to entry: Dependent on the electrode arrangement used it is designated as R_{IT} or R_{IR}, with insulation resistance, R_I expressed by the unit Ω.

3.3.1
$\boldsymbol{R_{IT}}$
insulation resistance between tapered pin electrodes
measured resistance using the tapered pin electrode arrangement in contact with a test specimen defined by this standard

Note 1 to entry: Tapered pin electrodes are mainly in contact with the bulk volume of the test specimen but the surface also contributes to the measured insulation resistance.

3.3.2
$\boldsymbol{R_{IB}}$
insulation resistance between bar electrodes
measured resistance using the bar electrode arrangement in contact with a test specimen defined by this standard

Note 1 to entry: Bar electrodes are mainly in contact with the surface of the test specimen but the bulk volume also contributes to the measured insulation resistance.

4 Significance

Insulating materials are used in general to electrically isolate components of an electrical system from each other and from earth. Solid insulating materials can also provide mechanical support. For these purposes it is generally desirable to have the insulation resistance as high as possible, consistent with acceptable mechanical, chemical and heat resistance properties.

Insulation resistance R_I is defined in this standard in two distinct ways: between tapered pin electrodes R_{IT}, and between bar electrodes R_{IB}.

NOTE 1 Determination of R_{IT} and R_{IB} on one and the same insulating material does not lead to comparable results.

Both are to be regarded as technical useful quantities, characterizing the overall resistive properties of an electrical insulating material or a product made from it. Insulation resistance contains both, volume resistance (see IEC 62631-3-1[2]) and surface resistance (see IEC 62631-3-2[3]) in differing portions, dependent on the specimen under test and its condition.

[1] Numbers in square brackets refer to the Bibliography.

Documents
Document Sharing Hub
Full document details: IEC 62631-3-3 2015

NOTE 2 In the past, resistance measured between specified line electrodes had also been designated as insulating resistance. This kind of resistance can be found as surface resistance between line electrodes R_{SD} in IEC 62631-3-2.

To achieve comparable results, insulating resistance shall be measured under fixed geometrical conditions, as stipulated in this standard. Under these conditions, it may be used to compare different insulating materials or products, considering that this approach only permits a simplified classification.

NOTE 3 Insulating resistance R_I defined by this standard is not identical with the resistances between conducting bodies within electric equipment, separated by electrical insulating materials. However, it can be useful for basic design considerations.

5 Method of test

5.1 General

The measurement of insulation resistances shall be carried out carefully and with due consideration for the electric properties of the measuring circuit as well as the specific electric properties of the material.

To carry out the test, in most cases the use of high voltages is necessary. Care shall be taken, to prevent from electric shock.

Polarization effects may influence the measurement. Therefore it is not acceptable to achieve the measured resistance twice in two consecutive experiments without a sufficient space of time in between.

NOTE For materials with an insulating resistance of not more than 10^{12} Ω, a period of 1 h after voltage application might be sufficient.

5.2 Test conditions

5.2.1 Voltage

The measuring voltage shall preferably be

10 V, 100 V, 500 V, 1 000 V, 10 000 V.

Other voltages may be applicable. If not otherwise stipulated, a voltage of 100 V shall be used.

NOTE 1 Partial discharges can lead to erroneous measurements when a specific inception voltage is exceeded. In air, below 340 V no partial discharges will occur.

NOTE 2 The ripple of the voltage source is important. A typical value for 100 V is $<5 \times 10^{-5}$ peak to peak.

5.2.2 Electrode material

Stainless steel with the composition as given in Table 1, shall be used as the electrode material. Other materials are acceptable if their equivalence has been proven.

Documents
Document Sharing Hub
Full document details: IEC 62631-3-3 2015