IEC 62634

Edition 2.0 2015-03

INTERNATIONAL STANDARD

NORME INTERNATIONALE

Radio data system (RDS) – Receiver products and characteristics – Methods of measurement

Système de radiodiffusion de données (RDS) – Récepteurs et caractéristiques – Méthodes de mesure

IEC 62634:2015-03(en-fr)

Documents
Document Sharing Hub

Full document details: IEC 62634 2015

THIS PUBLICATION IS COPYRIGHT PROTECTED
Copyright © 2015 IEC, Geneva, Switzerland

All rights reserved. Unless otherwise specified, no part of this publication may be reproduced or utilized in any form or by any means, electronic or mechanical, including photocopying and microfilm, without permission in writing from either IEC or IEC's member National Committee in the country of the requester. If you have any questions about IEC copyright or have an enquiry about obtaining additional rights to this publication, please contact the address below or your local IEC member National Committee for further information.

Droits de reproduction réservés. Sauf indication contraire, aucune partie de cette publication ne peut être reproduite ni utilisée sous quelque forme que ce soit et par aucun procédé, électronique ou mécanique, y compris la photocopie et les microfilms, sans l'accord écrit de l'IEC ou du Comité national de l'IEC du pays du demandeur. Si vous avez des questions sur le copyright de l'IEC ou si vous désirez obtenir des droits supplémentaires sur cette publication, utilisez les coordonnées ci-après ou contactez le Comité national de l'IEC de votre pays de résidence.

IEC Central Office
3, rue de Varembé
CH-1211 Geneva 20
Switzerland

Tel.: +41 22 919 02 11
Fax: +41 22 919 03 00
info@iec.ch
www.iec.ch

About the IEC
The International Electrotechnical Commission (IEC) is the leading global organization that prepares and publishes International Standards for all electrical, electronic and related technologies.

About IEC publications
The technical content of IEC publications is kept under constant review by the IEC. Please make sure that you have the latest edition, a corrigenda or an amendment might have been published.

IEC Catalogue - webstore.iec.ch/catalogue
The stand-alone application for consulting the entire bibliographical information on IEC International Standards, Technical Specifications, Technical Reports and other documents. Available for PC, Mac OS, Android Tablets and iPad.

IEC publications search - www.iec.ch/searchpub
The advanced search enables to find IEC publications by a variety of criteria (reference number, text, technical committee,…). It also gives information on projects, replaced and withdrawn publications.

IEC Just Published - webstore.iec.ch/justpublished
Stay up to date on all new IEC publications. Just Published details all new publications released. Available online and also once a month by email.

Electropedia - www.electropedia.org
The world's leading online dictionary of electronic and electrical terms containing more than 30 000 terms and definitions in English and French, with equivalent terms in 15 additional languages. Also known as the International Electrotechnical Vocabulary (IEV) online.

IEC Glossary - std.iec.ch/glossary
More than 60 000 electrotechnical terminology entries in English and French extracted from the Terms and Definitions clause of IEC publications issued since 2002. Some entries have been collected from earlier publications of IEC TC 37, 77, 86 and CISPR.

IEC Customer Service Centre - webstore.iec.ch/csc
If you wish to give us your feedback on this publication or need further assistance, please contact the Customer Service Centre: csc@iec.ch.

A propos de l'IEC
La Commission Electrotechnique Internationale (IEC) est la première organisation mondiale qui élabore et publie des Normes internationales pour tout ce qui a trait à l'électricité, à l'électronique et aux technologies apparentées.

A propos des publications IEC
Le contenu technique des publications IEC est constamment revu. Veuillez vous assurer que vous possédez l'édition la plus récente, un corrigendum ou amendement peut avoir été publié.

Catalogue IEC - webstore.iec.ch/catalogue
Application autonome pour consulter tous les renseignements bibliographiques sur les Normes internationales, Spécifications techniques, Rapports techniques et autres documents de l'IEC. Disponible pour PC, Mac OS, tablettes Android et iPad.

Recherche de publications IEC - www.iec.ch/searchpub
La recherche avancée permet de trouver des publications IEC en utilisant différents critères (numéro de référence, texte, comité d'études,…). Elle donne aussi des informations sur les projets et les publications remplacées ou retirées.

IEC Just Published - webstore.iec.ch/justpublished
Restez informé sur les nouvelles publications IEC. Just Published détaille les nouvelles publications parues. Disponible en ligne et aussi une fois par mois par email.

Electropedia - www.electropedia.org
Le premier dictionnaire en ligne de termes électroniques et électriques. Il contient plus de 30 000 termes et définitions en anglais et en français, ainsi que les termes équivalents dans 15 langues additionnelles. Egalement appelé Vocabulaire Electrotechnique International (IEV) en ligne.

Glossaire IEC - std.iec.ch/glossary
Plus de 60 000 entrées terminologiques électrotechniques, en anglais et en français, extraites des articles Termes et Définitions des publications IEC parues depuis 2002. Plus certaines entrées antérieures extraites des publications des CE 37, 77, 86 et CISPR de l'IEC.

Service Clients - webstore.iec.ch/csc
Si vous désirez nous donner des commentaires sur cette publication ou si vous avez des questions contactez-nous: csc@iec.ch.

Documents
Document Sharing Hub

Full document details: IEC 62634 2015

IEC 62634

Edition 2.0 2015-03

INTERNATIONAL STANDARD

NORME INTERNATIONALE

Radio data system (RDS) – Receiver products and characteristics – Methods of measurement

Système de radiodiffusion de données (RDS) – Récepteurs et caractéristiques – Méthodes de mesure

INTERNATIONAL
ELECTROTECHNICAL
COMMISSION

COMMISSION
ELECTROTECHNIQUE
INTERNATIONALE

ICS 33.060.20

ISBN 978-2-8322-2267-6

Warning! Make sure that you obtained this publication from an authorized distributor.
Attention! Veuillez vous assurer que vous avez obtenu cette publication via un distributeur agréé.

® Registered trademark of the International Electrotechnical Commission
Marque déposée de la Commission Electrotechnique Internationale

AVA Documents
Document Sharing Hub

Full document details: IEC 62634 2015

CONTENTS

FOREWORD 4
INTRODUCTION 6
1 Scope 7
2 Normative references 7
3 Terms, definitions and abbreviations 7
3.1 Terms and definitions 7
3.2 Abbreviations 8
4 Measuring method 8
4.1 Standard measuring signal 8
4.2 RDS data conditions 9
4.2.1 General 9
4.2.2 Matching circuit 9
5 Measurement of the RDS sensitivity 10
5.1 General 10
5.2 Method of measurement 10
5.3 Presentation of the results 10
6 Measurement of the RDS data acquisition 10
6.1 General 10
6.2 Time to synchronise 10
6.3 Time to detect a first PI 11
6.4 Method of measurement 11
7 Measurement of the large signal capabilities 11
7.1 General 11
7.2 Resistance to high wanted signal levels 11
7.2.1 Method of measurement 11
7.2.2 Large wanted signal requirement 11
7.3 RDS performance at large unwanted signal 11
7.3.1 Method of measurement 11
7.3.2 Large unwanted signal requirements 12
8 Measurement of the RDS selectivity 12
8.1 General 12
8.2 Method of measurement 12
9 Considerations and guidelines for evaluation of the dynamic RDS performance 13
9.1 General 13
9.2 RDS dynamic behaviour 13
9.3 Traffic announcements TA/TP 14
9.3.1 TA message 14
9.3.2 End of TA message 14
9.3.3 TP search 14
9.3.4 TA announcement skip 14
9.4 Regionalisation 14
9.4.1 Implementations 14
9.4.2 Requirement 15
Bibliography 16

AVA Documents
Document Sharing Hub

Full document details: IEC 62634 2015

Figure 1 – Coupling circuit 9
Figure 2 – Matching circuits for RDS product devices with three different input impedances 9

Table 1 – Presentation of the measurement result 12
Table 2 – AF example 15

Documents
Document Sharing Hub

Full document details: IEC 62634 2015

INTERNATIONAL ELECTROTECHNICAL COMMISSION

RADIO DATA SYSTEM (RDS) – RECEIVER PRODUCTS AND CHARACTERISTICS – METHODS OF MEASUREMENT

FOREWORD

1) The International Electrotechnical Commission (IEC) is a worldwide organization for standardization comprising all national electrotechnical committees (IEC National Committees). The object of IEC is to promote international co-operation on all questions concerning standardization in the electrical and electronic fields. To this end and in addition to other activities, IEC publishes International Standards, Technical Specifications, Technical Reports, Publicly Available Specifications (PAS) and Guides (hereafter referred to as "IEC Publication(s)"). Their preparation is entrusted to technical committees; any IEC National Committee interested in the subject dealt with may participate in this preparatory work. International, governmental and non-governmental organizations liaising with the IEC also participate in this preparation. IEC collaborates closely with the International Organization for Standardization (ISO) in accordance with conditions determined by agreement between the two organizations.
2) The formal decisions or agreements of IEC on technical matters express, as nearly as possible, an international consensus of opinion on the relevant subjects since each technical committee has representation from all interested IEC National Committees.
3) IEC Publications have the form of recommendations for international use and are accepted by IEC National Committees in that sense. While all reasonable efforts are made to ensure that the technical content of IEC Publications is accurate, IEC cannot be held responsible for the way in which they are used or for any misinterpretation by any end user.
4) In order to promote international uniformity, IEC National Committees undertake to apply IEC Publications transparently to the maximum extent possible in their national and regional publications. Any divergence between any IEC Publication and the corresponding national or regional publication shall be clearly indicated in the latter.
5) IEC itself does not provide any attestation of conformity. Independent certification bodies provide conformity assessment services and, in some areas, access to IEC marks of conformity. IEC is not responsible for any services carried out by independent certification bodies.
6) All users should ensure that they have the latest edition of this publication.
7) No liability shall attach to IEC or its directors, employees, servants or agents including individual experts and members of its technical committees and IEC National Committees for any personal injury, property damage or other damage of any nature whatsoever, whether direct or indirect, or for costs (including legal fees) and expenses arising out of the publication, use of, or reliance upon, this IEC Publication or any other IEC Publications.
8) Attention is drawn to the Normative references cited in this publication. Use of the referenced publications is indispensable for the correct application of this publication.
9) Attention is drawn to the possibility that some of the elements of this IEC Publication may be the subject of patent rights. IEC shall not be held responsible for identifying any or all such patent rights.

International Standard IEC 62634 has been prepared by technical area 1: Terminals for audio, video and data services and contents, of IEC technical committee 100: Audio, video and multimedia systems and equipment.

This second edition cancels and replaces the first edition published in 2011. This edition constitutes a technical revision.

This edition includes the following significant technical changes with respect to the previous edition:

- the ±100 kHz test measurement case from Clause 8 of IEC 62634:2011 was deleted as it did not permit to achieve stable and reproducible measurement results;
- an error has been corrected. The term "de-emphasis" shall read correctly "pre-emphasis".

AVA Documents
Document Sharing Hub

Full document details: IEC 62634 2015

The text of this standard is based on the following documents:

CDV	Report on voting
100/2121/CCDV	100/2419/RVC

Full information on the voting for the approval of this standard can be found in the report on voting indicated in the above table.

This publication has been drafted in accordance with the ISO/IEC Directives, Part 2.

The committee has decided that the contents of this publication will remain unchanged until the stability date indicated on the IEC website under "http://webstore.iec.ch" in the data related to the specific publication. At this date, the publication will be

- reconfirmed,
- withdrawn,
- replaced by a revised edition, or
- amended.

Documents
Document Sharing Hub

Full document details: IEC 62634 2015

INTRODUCTION

This International Standard gives commonly agreed measuring methods to complement the RDS standard IEC 62106 and the RBDS standard (NRSC-4-A) in the USA.

The RDS measuring methods presented here are directed at all manufacturers of RDS receiver products, and in particular tuner modules with embedded RDS functionality, including TMC (see ISO 14819 series of standards).

Documents
Document Sharing Hub

Full document details: IEC 62634 2015

RADIO DATA SYSTEM (RDS) – RECEIVER PRODUCTS AND CHARACTERISTICS – METHODS OF MEASUREMENT

1 Scope

This International Standard describes how to measure minimum RDS receiver performance requirements which concern three RDS receiver product categories. However, it should be noted that there are also RDS receiver products on the market that significantly out-perform the minimum RDS receiver performance requirements quoted.

Methods and algorithms to achieve automatic programme service-following by means of AF lists are, however, very customer- and manufacturer-specific, and are therefore not covered in this standard.

2 Normative references

The following documents, in whole or in part, are normatively referenced in this document and are indispensable for its application. For dated references, only the edition cited applies. For undated references, the latest edition of the referenced document (including any amendments) applies.

IEC 62106, *Specification of the Radio Data System (RDS) for VHF/FM sound broadcasting in the frequency range from 87,5 MHz to 108,0 MHz*

3 Terms, definitions and abbreviations

3.1 Terms and definitions

For the purposes of this document, the following terms and definitions apply. Terms and definitions of the RDS features used shall be found in IEC 62106.

3.1.1
RDS product category 1
RDS receiver product with high-ohmic input impedance

EXAMPLE For portable devices.

3.1.2
RDS product category 2
RDS receiver product with 50 Ω input impedance

EXAMPLE Car radio optimized for active antenna.

3.1.3
RDS product category 3
RDS receiver product with 75 Ω input impedance

EXAMPLE Car radio optimized for rod antenna or home receiver.

3.1.4
RDS reception
the signal at which the RDS signal is received with 50 % non-corrected error-free blocks

Note 1 to entry: In practice, the level at which the TP bit is immediately detected.

Documents
Document Sharing Hub

Full document details: IEC 62634 2015

3.1.5
large signal behaviour
capability of the RDS receiver to fulfil its function at or in the neighbourhood of strong FM signals

3.1.6
RDS selectivity
capability of the RDS receiver to cope with adjacent signals at both sides of the tuning frequency: ± 200 kHz

3.2 Abbreviations

For the purposes of this document, the following abbreviations apply.

AF	Alternative Frequency
dBμV	Signal level in μV; 0 dBμV = 1 μV, 6 dBμV = 2 μV, 20 dBμV = 10 μV
EON	Enhanced Other Networks information
FM	Frequency Modulation
GUI	Graphic User Interface
IPR	Intellectual Property Rights
PI	Programme Identification
PND	Personal Navigation Device
PS	Programme Service name
PTY	Programme TYpe
RDS	Radio Data System
RBDS	USA Radio Data System[1]
S+200	Unwanted signal, +200 kHz offset from the wanted signal
S−200	Unwanted signal, −200 kHz offset from the wanted signal
TA/TP	Traffic Announcement/Traffic Programme
TMC	Traffic Message Channel

4 Measuring method

4.1 Standard measuring signal

Unless otherwise stated, the following measuring signal shall be applied.

Tuning frequency	97,1 MHz
Signal input level V_i	60 dBμV
Deviation Δf	22,5 kHz
Modulation frequency F_{mod}	1 kHz
Pilot 19 kHz deviation	6,75 kHz
Modulation method	$L = R$
Deviation RDS carrier Δf_{RDS}	2 kHz
Pre-emphasis	50 μs (USA: 75 μs)

Where an unwanted signal will be added, for RDS car radio selectivity measurements, this will be done with the coupling circuit shown in Figure 1. The circuit shows how to couple two

[1] See NRSC-4-A, RBDS standard cited in the Bibliography.

Documents
Document Sharing Hub
Full document details: IEC 62634 2015

generators with 50 Ω output so that the total output impedance remains 50 Ω. Depending on the input impedance, one of the matching circuits shown in Figure 2 should be applied in addition.

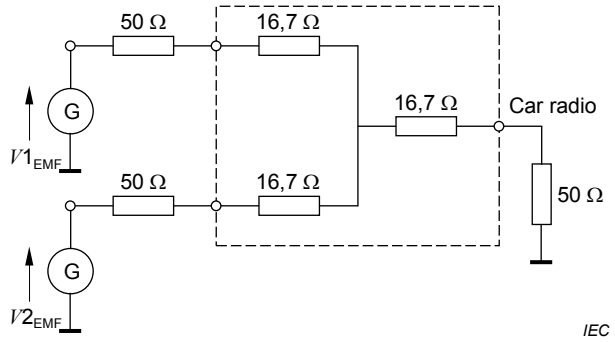

Figure 1 – Coupling circuit

4.2 RDS data conditions

4.2.1 General

The RDS data shall consist of an appropriate PI code, a PS name, one or more AFs and chosen values for, e.g. TP (=1), DI (=0000), TA (=0), PTY (=00001) and M/S (=1), with a maximum repetition rate for group type 0A of four groups per second. Use group type A only.

4.2.2 Matching circuit

For the three types of RDS product devices (modules for portable devices, car radio and home receiver), the matching circuit is given in Figure 2.

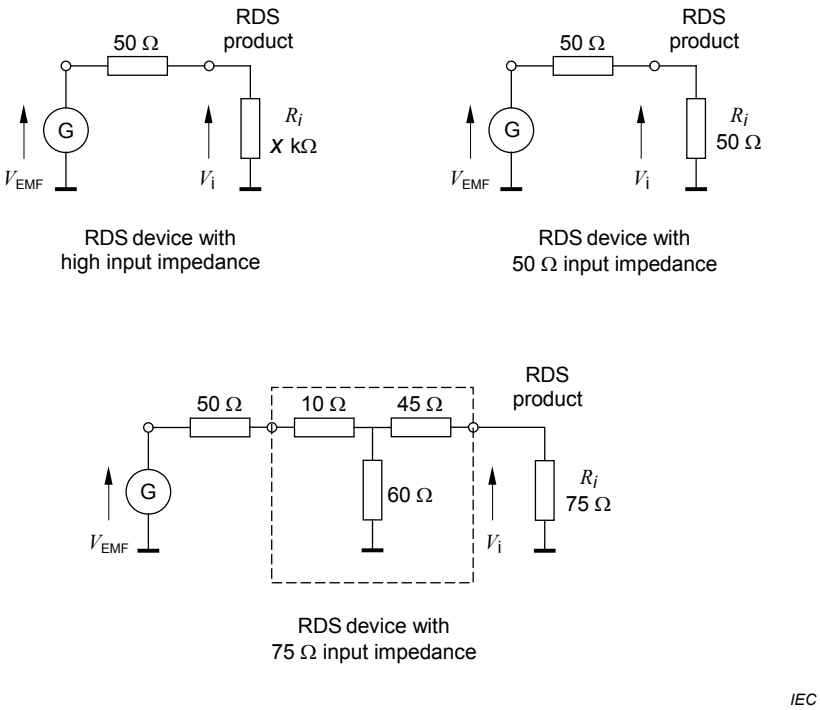

Figure 2 – Matching circuits for RDS product devices with three different input impedances

Documents
Document Sharing Hub
Full document details: IEC 62634 2015