IEC 62679-3-2

Edition 1.0 2013-09

INTERNATIONAL STANDARD

NORME INTERNATIONALE

colour inside

Electronic paper display – Part 3-2: Measuring method – Electro-optical

Afficheur de papier électronique – Partie 3-2: Méthode de mesure – Electro-optique

IEC 62679-3-2:2013

Documents
Document Sharing Hub

Full document details: IEC 62679-3-2 2013

THIS PUBLICATION IS COPYRIGHT PROTECTED

Copyright © 2013 IEC, Geneva, Switzerland

All rights reserved. Unless otherwise specified, no part of this publication may be reproduced or utilized in any form or by any means, electronic or mechanical, including photocopying and microfilm, without permission in writing from either IEC or IEC's member National Committee in the country of the requester.
If you have any questions about IEC copyright or have an enquiry about obtaining additional rights to this publication, please contact the address below or your local IEC member National Committee for further information.

Droits de reproduction réservés. Sauf indication contraire, aucune partie de cette publication ne peut être reproduite ni utilisée sous quelque forme que ce soit et par aucun procédé, électronique ou mécanique, y compris la photocopie et les microfilms, sans l'accord écrit de la CEI ou du Comité national de la CEI du pays du demandeur.
Si vous avez des questions sur le copyright de la CEI ou si vous désirez obtenir des droits supplémentaires sur cette publication, utilisez les coordonnées ci-après ou contactez le Comité national de la CEI de votre pays de résidence.

IEC Central Office
3, rue de Varembé
CH-1211 Geneva 20
Switzerland

Tel.: +41 22 919 02 11
Fax: +41 22 919 03 00
info@iec.ch
www.iec.ch

About the IEC

The International Electrotechnical Commission (IEC) is the leading global organization that prepares and publishes International Standards for all electrical, electronic and related technologies.

About IEC publications

The technical content of IEC publications is kept under constant review by the IEC. Please make sure that you have the latest edition, a corrigenda or an amendment might have been published.

Useful links:

IEC publications search - www.iec.ch/searchpub

The advanced search enables you to find IEC publications by a variety of criteria (reference number, text, technical committee,…).
It also gives information on projects, replaced and withdrawn publications.

IEC Just Published - webstore.iec.ch/justpublished

Stay up to date on all new IEC publications. Just Published details all new publications released. Available on-line and also once a month by email.

Electropedia - www.electropedia.org

The world's leading online dictionary of electronic and electrical terms containing more than 30 000 terms and definitions in English and French, with equivalent terms in additional languages. Also known as the International Electrotechnical Vocabulary (IEV) on-line.

Customer Service Centre - webstore.iec.ch/csc

If you wish to give us your feedback on this publication or need further assistance, please contact the Customer Service Centre: csc@iec.ch.

A propos de la CEI

La Commission Electrotechnique Internationale (CEI) est la première organisation mondiale qui élabore et publie des Normes internationales pour tout ce qui a trait à l'électricité, à l'électronique et aux technologies apparentées.

A propos des publications CEI

Le contenu technique des publications de la CEI est constamment revu. Veuillez vous assurer que vous possédez l'édition la plus récente, un corrigendum ou amendement peut avoir été publié.

Liens utiles:

Recherche de publications CEI - www.iec.ch/searchpub

La recherche avancée vous permet de trouver des publications CEI en utilisant différents critères (numéro de référence, texte, comité d'études,…).
Elle donne aussi des informations sur les projets et les publications remplacées ou retirées.

Just Published CEI - webstore.iec.ch/justpublished

Restez informé sur les nouvelles publications de la CEI. Just Published détaille les nouvelles publications parues. Disponible en ligne et aussi une fois par mois par email.

Electropedia - www.electropedia.org

Le premier dictionnaire en ligne au monde de termes électroniques et électriques. Il contient plus de 30 000 termes et définitions en anglais et en français, ainsi que les termes équivalents dans les langues additionnelles. Egalement appelé Vocabulaire Electrotechnique International (VEI) en ligne.

Service Clients - webstore.iec.ch/csc

Si vous désirez nous donner des commentaires sur cette publication ou si vous avez des questions contactez-nous: csc@iec.ch.

Documents
Document Sharing Hub

Full document details: IEC 62679-3-2 2013

IEC 62679-3-2

Edition 1.0 2013-09

INTERNATIONAL STANDARD

NORME INTERNATIONALE

colour inside

Electronic paper display – Part 3-2: Measuring method – Electro-optical

Afficheur de papier électronique – Partie 3-2: Méthode de mesure – Electro-optique

INTERNATIONAL ELECTROTECHNICAL COMMISSION

COMMISSION ELECTROTECHNIQUE INTERNATIONALE

PRICE CODE
CODE PRIX

T

ICS 31.120; 31.260

ISBN 978-2-8322-1044-4

Warning! Make sure that you obtained this publication from an authorized distributor.
Attention! Veuillez vous assurer que vous avez obtenu cette publication via un distributeur agréé.

AVA Documents
Document Sharing Hub

® Registered trademark of the International Electrotechnical Commission
Marque déposée de la Commission Electrotechnique Internationale

Full document details: IEC 62679-3-2 2013

CONTENTS

FOREWORD 4
1 Scope 6
2 Abbreviations 6
3 Overview 6
3.1 General 6
3.2 Measuring equipment 6
3.3 Standard locations of measurement field 7
3.3.1 Matrix displays 7
3.3.2 Segment displays 7
3.4 Initial reflectance light signal 8
3.5 Standard DUT operating conditions 9
3.5.1 General 9
3.5.2 Response time 9
3.5.3 Frame response 11
3.6 Electrical characteristics – Rewriting electric energy 15
3.6.1 Purpose 15
3.6.2 Measuring instruments 15
3.6.3 Measuring method 15
3.6.4 Explanation 16
3.6.5 Specified conditions 17
3.7 Image retention duration 17
3.7.1 Purpose 17
3.7.2 Measuring instruments 17
3.7.3 Measuring method 17
3.7.4 Explanation 18
3.7.5 Specified conditions 18
3.8 Electric power of keeping the image contrast 19
3.8.1 Purpose 19
3.8.2 Measuring instruments 19
3.8.3 Measuring method 19
3.8.4 Explanation 20
3.8.5 Specified conditions 20
3.9 Electric energy of keeping the image contrast for a certain time period 21
3.9.1 Purpose 21
3.9.2 Measuring instruments 21
3.9.3 Measuring method 21
3.9.4 Explanation 22
3.9.5 Specified conditions 23
Bibliography 24

Figure 1 – Measurement locations of display active area 7
Figure 2 – HL pattern 8
Figure 3 – Sampling points 8
Figure 4 – An example of block diagram of an electronic paper display panel and module 10
Figure 5 – Relationship between driving signal and optical response time 10

AVA Documents
Document Sharing Hub

Full document details: IEC 62679-3-2 2013

Figure 6 – An example of driving signal and frame response time (segment) 13
Figure 7 – An example of driving signal and frame response time (matrix) 14
Figure 8 – Checkerboard pattern 16
Figure 9 – An example of block diagram for measuring the rewriting electric energy of an electronic paper display module 16
Figure 10 – Temporal characteristics of contrast ratio 18
Figure 11 – Image contrast and driving mode 19
Figure 12 – Image contrast, driving mode and measuring period 22

Documents
Document Sharing Hub
Full document details: IEC 62679-3-2 2013

INTERNATIONAL ELECTROTECHNICAL COMMISSION

ELECTRONIC PAPER DISPLAY –

Part 3-2: Measuring method – Electro-optical

FOREWORD

1) The International Electrotechnical Commission (IEC) is a worldwide organization for standardization comprising all national electrotechnical committees (IEC National Committees). The object of IEC is to promote international co-operation on all questions concerning standardization in the electrical and electronic fields. To this end and in addition to other activities, IEC publishes International Standards, Technical Specifications, Technical Reports, Publicly Available Specifications (PAS) and Guides (hereafter referred to as "IEC Publication(s)"). Their preparation is entrusted to technical committees; any IEC National Committee interested in the subject dealt with may participate in this preparatory work. International, governmental and non-governmental organizations liaising with the IEC also participate in this preparation. IEC collaborates closely with the International Organization for Standardization (ISO) in accordance with conditions determined by agreement between the two organizations.
2) The formal decisions or agreements of IEC on technical matters express, as nearly as possible, an international consensus of opinion on the relevant subjects since each technical committee has representation from all interested IEC National Committees.
3) IEC Publications have the form of recommendations for international use and are accepted by IEC National Committees in that sense. While all reasonable efforts are made to ensure that the technical content of IEC Publications is accurate, IEC cannot be held responsible for the way in which they are used or for any misinterpretation by any end user.
4) In order to promote international uniformity, IEC National Committees undertake to apply IEC Publications transparently to the maximum extent possible in their national and regional publications. Any divergence between any IEC Publication and the corresponding national or regional publication shall be clearly indicated in the latter.
5) IEC itself does not provide any attestation of conformity. Independent certification bodies provide conformity assessment services and, in some areas, access to IEC marks of conformity. IEC is not responsible for any services carried out by independent certification bodies.
6) All users should ensure that they have the latest edition of this publication.
7) No liability shall attach to IEC or its directors, employees, servants or agents including individual experts and members of its technical committees and IEC National Committees for any personal injury, property damage or other damage of any nature whatsoever, whether direct or indirect, or for costs (including legal fees) and expenses arising out of the publication, use of, or reliance upon, this IEC Publication or any other IEC Publications.
8) Attention is drawn to the Normative references cited in this publication. Use of the referenced publications is indispensable for the correct application of this publication.
9) Attention is drawn to the possibility that some of the elements of this IEC Publication may be the subject of patent rights. IEC shall not be held responsible for identifying any or all such patent rights.

International Standard IEC 62679-3-2 has been prepared by IEC technical committee 110: Electronic display devices.

The text of this standard is based on the following documents:

FDIS	Report on voting
110/475/FDIS	110/502/RVD

Full information on the voting for the approval of this standard can be found in the report on voting indicated in the above table.

This publication has been drafted in accordance with the ISO/IEC Directives, Part 2.

A list of all parts in the IEC 62679 series, published under the general title *Electronic paper display*, can be found on the IEC website.

Documents
Document Sharing Hub

Full document details: IEC 62679-3-2 2013

The committee has decided that the contents of this publication will remain unchanged until the stability date indicated on the IEC web site under "http://webstore.iec.ch" in the data related to the specific publication. At this date, the publication will be

- reconfirmed,
- withdrawn,
- replaced by a revised edition, or
- amended.

IMPORTANT – The 'colour inside' logo on the cover page of this publication indicates that it contains colours which are considered to be useful for the correct understanding of its contents. Users should therefore print this document using a colour printer.

Documents
Document Sharing Hub

Full document details: IEC 62679-3-2 2013

ELECTRONIC PAPER DISPLAY –

Part 3-2: Measuring method – Electro-optical

1 Scope

This part of IEC 62679 series is restricted to electronic paper display modules using either segment, passive, or active matrix, and either monochromatic, or colour type displays.

In order to achieve a useful and uniform description of the performance of these devices, specifications for commonly accepted relevant parameters are put forward.

The purpose of this part of IEC 62679 series is to indicate and list the procedure-dependent parameters and to prescribe the specific methods and conditions that are to be used for their uniform numerical determination.

2 Abbreviations

DUT – Device under test

LMD – Light measuring device

PWM – Pulse width modulation

3 Overview

3.1 General

It is intended that the future IEC 62679-3-1 will cover the proper illumination method and optical measurement method to evaluate the electro-optical property of electronic paper display modules.

If an electronic paper display module works in combination with an external touch-key-panel or an external front-light-unit, remove those for measuring. If it is not possible to remove these elements, this fact shall be mentioned. However, it is not necessary to mention the protective sheet.

It is assumed that all measurements are performed by personnel skilled in the general art of radiometric and electrical measurements as the purpose of this paper is not to give a detailed account of good practice in electrical and optical experimental physics. Furthermore, it is necessary to ensure that all equipment is suitably calibrated as is known to skilled personnel and that records of the calibration data and traceability are kept.

It is assumed that all measurements are performed under normal operation conditions as used in the finished product by the end user unless requested otherwise. This includes the driving signals (waveforms) of the electronic paper display panel and/or module.

NOTE An electronic paper display module consists of an electronic paper display panel (electro-optical material, back plane, and driving circuit) and a logic circuit (see Figure 4).

3.2 Measuring equipment

Luminance meter: the devices for measuring luminance can be realized by

- a spectro-radiometer with numerical $V(\lambda)$ correction

Documents
Document Sharing Hub

Full document details: IEC 62679-3-2 2013

- a photometer with filter adaption to $V(\lambda)$

where $V(\lambda)$ is the photopic response, as defined by the CIE 1931 standard observer in CIE/ISO 10527:1991.

Colorimeter: devices for measuring colour can be realized by

- spectro-radiometer with numerical evaluation (spectrophotometer),
- filter-colorimeter

3.3 Standard locations of measurement field

3.3.1 Matrix displays

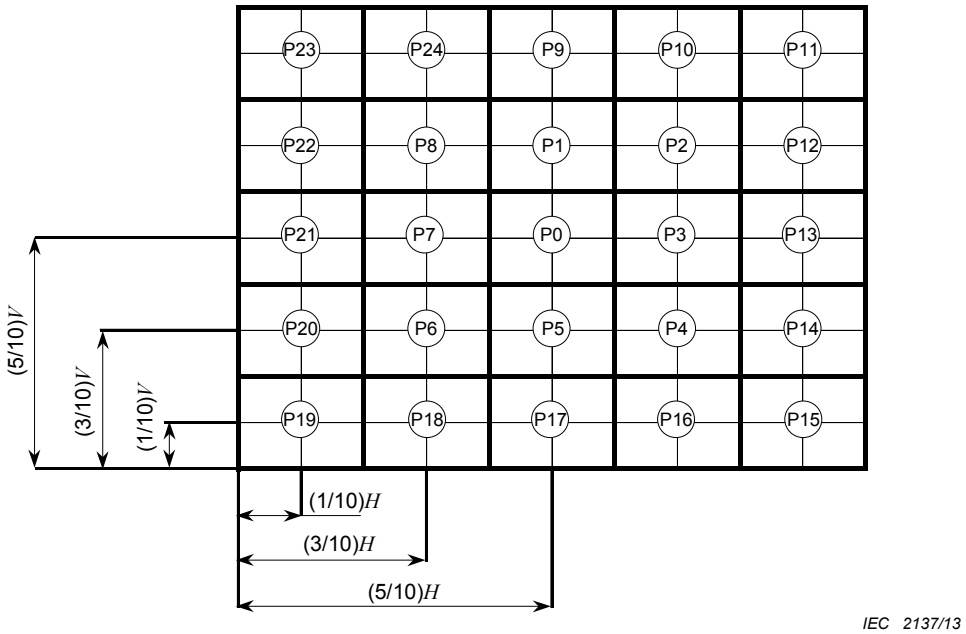

NOTE Standard measurement positions are at the centres of all rectangles P0 to P24. Height and width of each rectangle are 20 % of display active area height and width respectively.

Figure 1 – Measurement locations of display active area

Luminance, spectral distribution and/or tristimulus measurements may be taken at several specified positions on the DUT surface. To this end, the front view of the display is divided into 25 identical imaginary rectangles (see Figure 1). Unless otherwise specified, measurements are carried out in the centre of each rectangle. Care shall be taken that the measuring spots on the display do not overlap. Positioning of the measuring spot on the thus prescribed positions in the x and y axis shall be to within 7 % of V and H respectively (where V and H denote the length of the display active area in the x and y axis respectively).

While scanning the position of the measuring spot over the surface of the DUT, the polar angles shall stay fixed.

Any deviation from the above-described standard positions shall be added to the detail specification.

3.3.2 Segment displays

Standard measurement positions are the same as those prescribed for the matrix displays above. However, for segment displays, all measurements shall be performed at the centre of a segment and the chosen segment should be as close as possible to the centre of the designated rectangle. Thus, when measurements on position Pi (i = 0 to 24) are required,

AVA Documents Document Sharing Hub

Full document details: IEC 62679-3-2 2013

the geometrical centre of the segment closest to the centre of box P*i* should be used for positioning of the detector.

Any deviation from the above-described standard positions shall be mentioned.

3.4 Initial reflectance light signal

Measuring method:

Send an HL pattern (see Figure 2) that has a 50 % cover ratio to an electronic paper display module by using a pattern generator and a driving circuit. Stop driving that electronic paper display module (do not send any command nor data). Select one proper physical condition of lighting and measuring method. Measure 5 points each (see Figure 3) in both areas of high and low reflected optical signal. Calculate the average of those 5 points to obtain the initial reflectance of Ref_{max} and Ref_{min}. Calculate the initial contrast, CR_i, from Ref_{max} and Ref_{min}.

$$CR_i = Ref_{min}/Ref_{max}$$

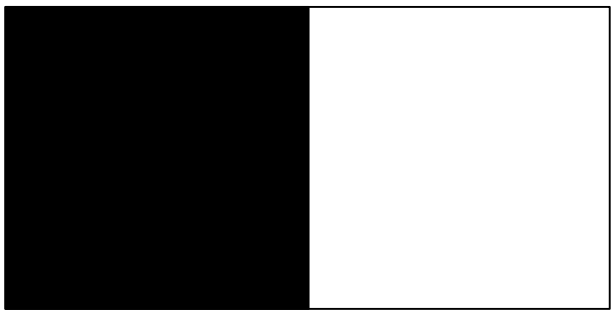

IEC 2138/13

The 'black' area shall have the lowest reflected optical signal while the 'white' area shall have the highest reflected optical signal.

Figure 2 – HL pattern

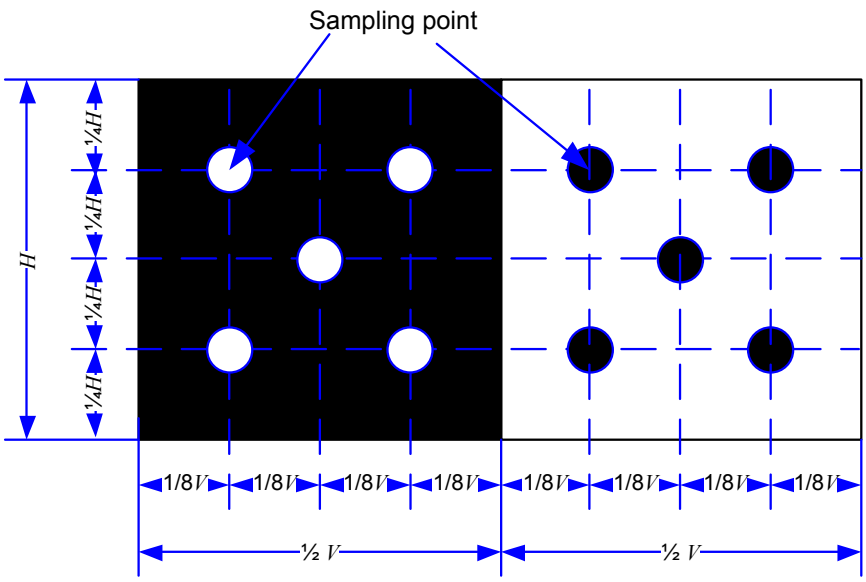

IEC 2139/13

Figure 3 – Sampling points

Documents
Document Sharing Hub
Full document details: IEC 62679-3-2 2013

3.5 Standard DUT operating conditions

3.5.1 General

Depending on the physics of some electronic paper display module types, optical properties of these modules vary with the direction of observation (i.e. viewing-direction). Therefore it should be understood that for the determination of several of the parameters below, proper (mechanical) control and specification of the viewing direction is necessary. The normal viewing direction should be the default viewing direction, and the LMD aligned perpendicular to the DUT surface, unless stated otherwise. For viewing direction dependence, the process that will be described in IEC 62679-3-1 can be followed.

All light sources used for illumination of the DUT during the measurement shall be constant in illuminance and spectrum at least over the time-period of measurements that are related to each other in the evaluation (e.g. bright and dark state of a display for contrast evaluation). The luminance or illuminance of the arrangement used for illumination of the DUT shall be constant within ± 1 %, and shall not exhibit short-term fluctuations (e.g. ripple, PWM, etc.). Measurements shall be started after the DUT, the source illumination, and measuring instruments achieve stability. Constant and correct temperature of the DUT shall be verified.

The module being tested shall be physically prepared for testing. It should be thermostatically controlled for stable operation during a specified period being less than one hour. If the control period is less than one hour, stable temperature shall be verified. Testing shall be conducted under nominal conditions of driving signal (voltage, current, waveform). Any deviation from the standard device operation conditions shall be added to the detail specification.

3.5.2 Response time

3.5.2.1 Purpose

This method is used for the determination of the time needed to change from high to low reflected optical signal (light to dark) or from low to high reflected optical signal (dark to light) by application of the driving voltage.

By convention, the response of an electronic paper display module to an increase in driving voltage is called ‘turn-high’ whereas the relaxation following a decrease of the driving voltage is called ‘turn-low’. While this definition is straightforward in the case of segment- and low-resolution displays, it is significantly more complicated in the case of high resolution matrix displays, due to the complexity of data processing.

In order to measure a meaningful response time for the electronic paper display module, it is recommended to evaluate a response time for the actual driving signal for an electronic paper panel of that display. This requires having access to the electrical signal that is applied to the electronic paper display panel.

3.5.2.2 Measurement equipment

An LMD with sufficient frequency response, a power supply, a driving signal generator, a trigger signal generator, and a recorder.

3.5.2.3 Measurement method

The measurements are performed in the dark room under standard measuring conditions.

Drive the DUT according to the display driving method and measure the reflection-time transition (see Figure 5). For segment display, drive only one segment. For matrix display, drive multiple pixels at the same time.

Documents
Document Sharing Hub
Full document details: IEC 62679-3-2 2013

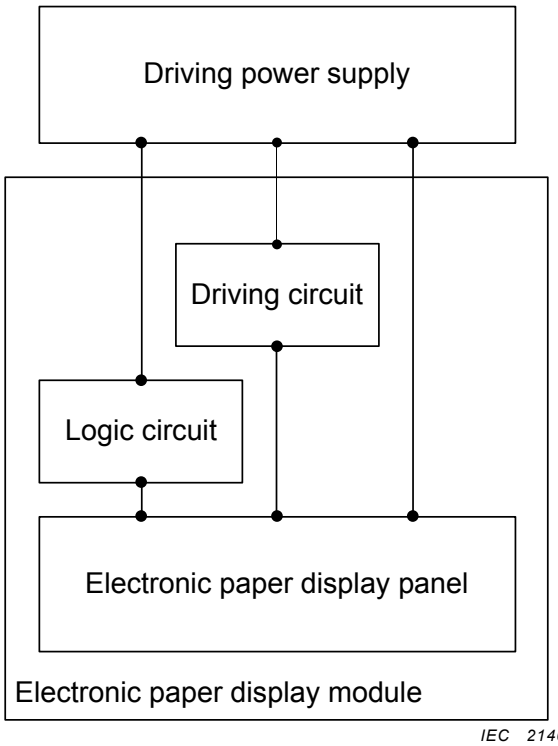

Figure 4 – An example of block diagram of an electronic paper display panel and module

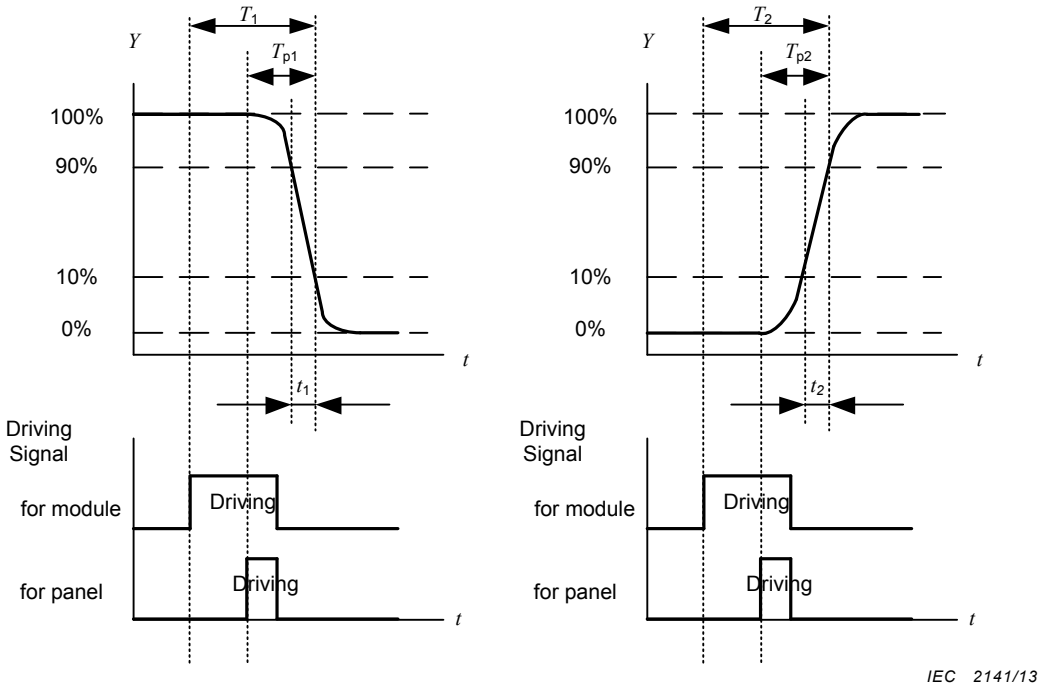

T_1 – time from start of the module driving signal until panel reaches 10% of reflected optical signal

T_2 – time from start of the module driving signal until panel reaches 90% of reflected optical signal

T_{p1} – time from start of the panel driving signal until panel reaches 10% of reflected optical signal

T_{p2} – time from start of the panel driving signal until panel reaches 90% of reflected optical signal

t_1 – time needed to change the reflected optical signal of the panel from 90% to 10%

t_2 – time needed to change the reflected optical signal of the panel from 10% to 90%

Figure 5 – Relationship between driving signal and optical response time

AVA Documents
Document Sharing Hub
Full document details: IEC 62679-3-2 2013

a) Select one of the standard measuring systems and set the DUT.

b) Use the measurement circuits system as shown in Figure 4, and measure response time.

The electrical signal of the detector, which is positioned in the design-viewing direction at position P0 (see Figure 1), is measured at the recorder. The display is driven by an invertible plain field signal from a signal generator. Upon inverting, the signal goes from start level to end level without displaying any intermediate level on the display. The frequency of inversion shall be low enough to allow the display to obtain optical equilibrium in each of the two states. A trigger signal is sent to the recorder upon inversion of the reflected optical signal at position P0. The luminance meter measures the optical response. Ripples in the detected signal due to effects that are not relevant (e.g. originating from the display frame-frequency) shall be eliminated from the response. The reflected optical signal in the LIGHT mode is chosen as 100 % and in the DARK mode as 0 %.

3.5.2.4 Explanation

- The time from the start of the module driving signal until the panel reaches 90 % or 10 % of the reflected optical signal is called ‘module response time’.
- The time from the start of the module driving signal until the panel reaches 10 % of the reflected optical signal (from HIGH to LOW) is T_1.
- The time from the start of the module driving signal until the panel reaches 90 % of the reflected optical signal (from LOW to HIGH) is T_2.
- The time from the start of the panel driving signal until the panel reaches 90 % or 10 % of the reflected optical signal is called ‘panel response time’.
- The time from the start of the panel driving signal until the panel reaches 10 % (from HIGH to LOW) of the reflected optical signal is T_{p1}.
- The time from the start of the panel driving signal until the panel reaches 90 % (from LOW to HIGH) of the reflected optical signal is T_{p2}.
- The time needed to change the reflected light signal of the panel from 90 % to 10 % or from 10 % to 90 % is called ‘fall time’,t_1 or ‘rise time’,t_2.

NOTE 0 % is the minimum reference reflected optical signal level, and 100% is the maximum reference reflected optical signal.

3.5.2.5 Specified conditions

The records of the measurement shall be made to describe deviations from the standard measurement conditions and include the following information:

- selected standard measuring system and its related conditions;
- driving signals (waveforms, voltage);
- measurement equipment and detector specifications;
- if not measuring the ‘panel response time’, note that.

3.5.3 Frame response

3.5.3.1 Purpose

This method is used for the assessment of the frame response time of both segment and matrix electronic paper display modules. This response includes any stabilization period used by the device after the initial leading edge of the drive signal to create the frame.

3.5.3.2 Measurement equipment

Same as in 3.5.2.2.

Documents
Document Sharing Hub

Full document details: IEC 62679-3-2 2013

3.5.3.3 Measurement method

Measure the transition period from the displaying of the highest to the lowest reflected optical signal, and the lowest to the highest reflected optical signal. If the DUT requires a certain kind of process, such as a stabilizing process before writing the actual data to the DUT with a certain signal, start measuring by inputting that signal (see Figure 6). Normally the driving signals (waveforms) of the electronic paper display module are used. If these driving signals include a preliminary process such as 'Reset' or 'stabilization' before writing the actual image data to the module, start measuring the response times T_1 or T_2 from the start of that process.

For the matrix display, measure that period by changing pattern A to pattern B or pattern B to pattern A (see Figure 7). The measuring location Pf is the last changed location in the standard measuring locations shown in Figure 7.

Other measuring methods follow 3.5.2.3.

Documents
Document Sharing Hub

Full document details: IEC 62679-3-2 2013

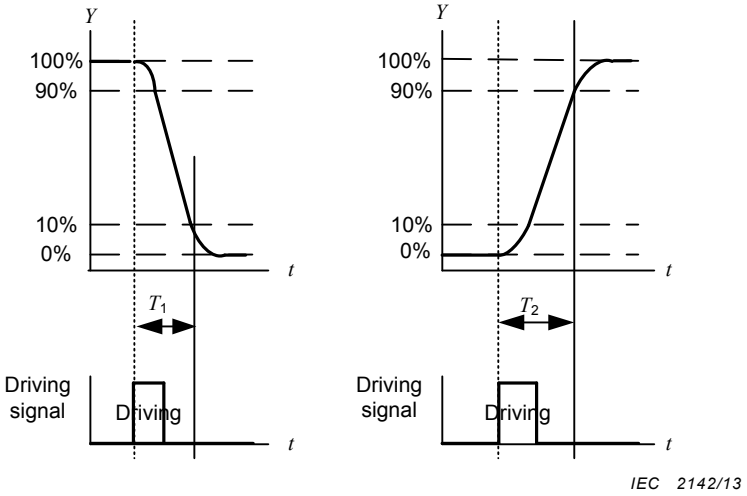

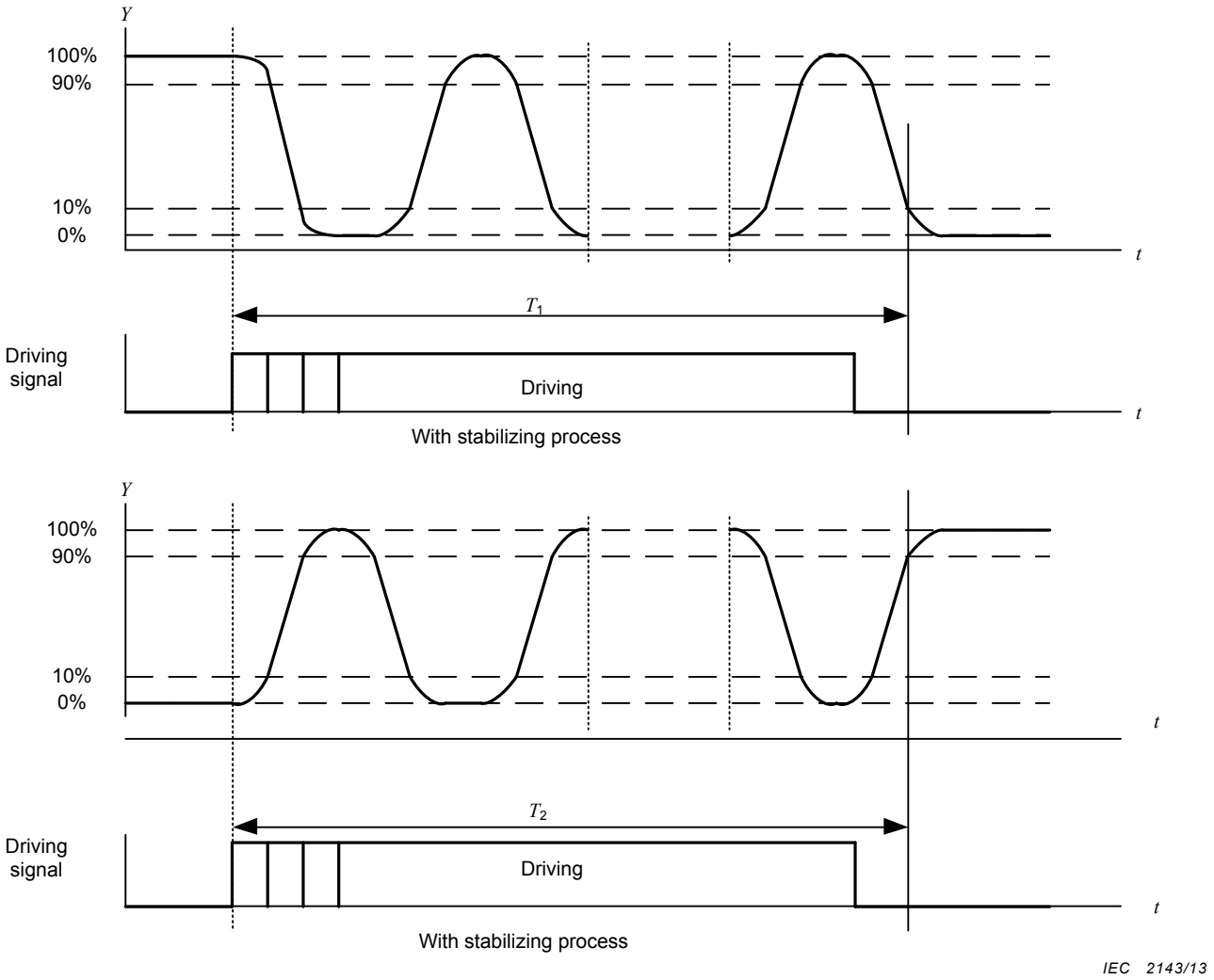

Y – reflected optical signal

t – time

Figure 6 – An example of driving signal and frame response time (segment)

Documents
Document Sharing Hub
Full document details: IEC 62679-3-2 2013

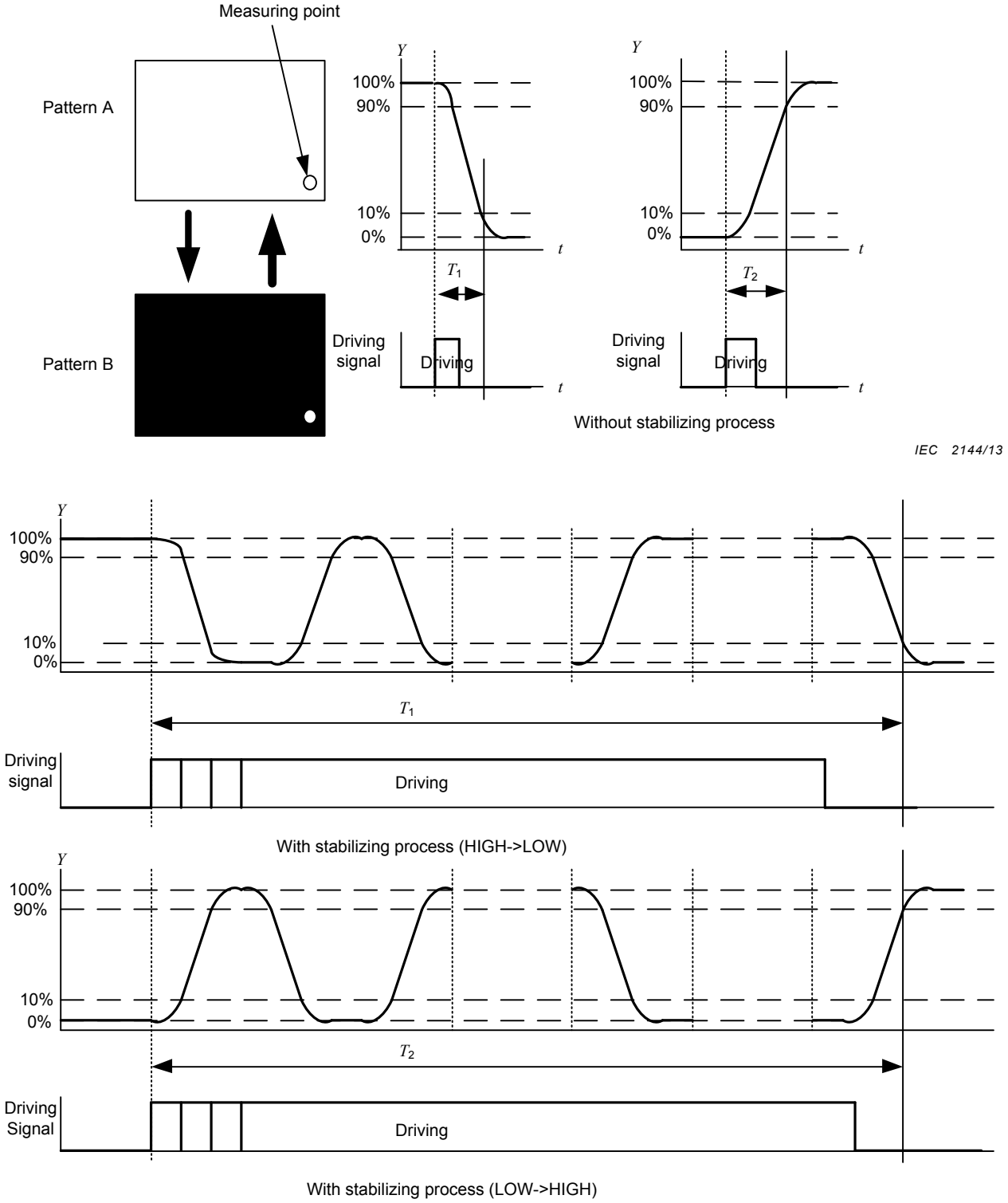

Y – reflected optical signal

t – time

Figure 7 – An example of driving signal and frame response time (matrix)

3.5.3.4 Explanation

To change from the highest reflection to the lowest reflection, the time needed for the reflected optical signal to change from 100 % to 10 % (T_1) is measured. To change from the

AVA Documents Document Sharing Hub