# IEC 62679-3-3

Edition 1.0 2016-09

# INTERNATIONAL STANDARD

colour inside

## Electronic paper displays –
## Part 3-3: Optical measuring methods for displays with integrated lighting units

IEC 62679-3-3:2016-09(en)

Documents
Document Sharing Hub

Full document details: IEC 62679-3-3 2016

**THIS PUBLICATION IS COPYRIGHT PROTECTED**
**Copyright © 2016 IEC, Geneva, Switzerland**

All rights reserved. Unless otherwise specified, no part of this publication may be reproduced or utilized in any form or by any means, electronic or mechanical, including photocopying and microfilm, without permission in writing from either IEC or IEC's member National Committee in the country of the requester. If you have any questions about IEC copyright or have an enquiry about obtaining additional rights to this publication, please contact the address below or your local IEC member National Committee for further information.

IEC Central Office
3, rue de Varembé
CH-1211 Geneva 20
Switzerland

Tel.: +41 22 919 02 11
Fax: +41 22 919 03 00
info@iec.ch
www.iec.ch

**About the IEC**
The International Electrotechnical Commission (IEC) is the leading global organization that prepares and publishes International Standards for all electrical, electronic and related technologies.

**About IEC publications**
The technical content of IEC publications is kept under constant review by the IEC. Please make sure that you have the latest edition, a corrigenda or an amendment might have been published.

**IEC Catalogue - webstore.iec.ch/catalogue**
The stand-alone application for consulting the entire bibliographical information on IEC International Standards, Technical Specifications, Technical Reports and other documents. Available for PC, Mac OS, Android Tablets and iPad.

**IEC publications search - www.iec.ch/searchpub**
The advanced search enables to find IEC publications by a variety of criteria (reference number, text, technical committee,…). It also gives information on projects, replaced and withdrawn publications.

**IEC Just Published - webstore.iec.ch/justpublished**
Stay up to date on all new IEC publications. Just Published details all new publications released. Available online and also once a month by email.

**Electropedia - www.electropedia.org**
The world's leading online dictionary of electronic and electrical terms containing 20 000 terms and definitions in English and French, with equivalent terms in 15 additional languages. Also known as the International Electrotechnical Vocabulary (IEV) online.

**IEC Glossary - std.iec.ch/glossary**
65 000 electrotechnical terminology entries in English and French extracted from the Terms and Definitions clause of IEC publications issued since 2002. Some entries have been collected from earlier publications of IEC TC 37, 77, 86 and CISPR.

**IEC Customer Service Centre - webstore.iec.ch/csc**
If you wish to give us your feedback on this publication or need further assistance, please contact the Customer Service Centre: csc@iec.ch.

AVA Documents
Document Sharing Hub

Full document details: IEC 62679-3-3 2016

# IEC 62679-3-3

Edition 1.0 2016-09

# INTERNATIONAL STANDARD

colour inside

## Electronic paper displays –
## Part 3-3: Optical measuring methods for displays with integrated lighting units

INTERNATIONAL
ELECTROTECHNICAL
COMMISSION

ICS 31.120; 31.260

ISBN 978-2-8322-3616-1

**Warning! Make sure that you obtained this publication from an authorized distributor.**

® Registered trademark of the International Electrotechnical Commission

Documents
Document Sharing Hub

Full document details: IEC 62679-3-3 2016

CONTENTS

FOREWORD ..... 5
1 Scope ..... 7
2 Normative references ..... 7
3 Terms, definitions and abbreviated terms ..... 7
3.1 Terms and definitions ..... 7
3.2 Abbreviated terms ..... 8
4 Standard measuring conditions ..... 8
4.1 Standard environmental measuring conditions ..... 8
4.2 Viewing direction coordinate system ..... 8
4.3 Standard lighting conditions ..... 9
4.3.1 General comments and remarks on the measurement of electronic paper displays ..... 9
4.3.2 Dark room conditions ..... 9
4.3.3 Standard indoor ambient illumination spectra ..... 9
4.3.4 Standard illumination geometries ..... 10
4.4 Adjustment of the EPD ..... 11
4.5 Standard conditions of measuring equipment ..... 11
4.6 Working standards and references ..... 11
4.7 Standard locations of measurement field ..... 11
4.7.1 Matrix displays ..... 11
4.7.2 Segment displays ..... 12
5 Optical measuring methods ..... 12
5.1 Reflection measurements ..... 12
5.1.1 General ..... 12
5.1.2 Measuring conditions ..... 12
5.1.3 Measuring the hemispherical diffuse reflectance ..... 13
5.1.4 Measuring the reflectance factor for a directed light source ..... 15
5.2 Display photometric uniformity in a dark room ..... 16
5.2.1 Purpose ..... 16
5.2.2 Measuring equipment ..... 16
5.2.3 Measurement method ..... 16
5.2.4 Definitions and evaluations ..... 17
5.3 Dark room contrast ratio ..... 17
5.3.1 Purpose ..... 17
5.3.2 Measuring equipment ..... 17
5.3.3 Measurement method ..... 17
5.3.4 Definitions and evaluations ..... 17
5.4 Contrast ratio under indoor illumination ..... 18
5.4.1 Purpose ..... 18
5.4.2 Measurement conditions ..... 18
5.4.3 Measurement method ..... 18
5.5 Cross-talk ..... 19
5.5.1 Purpose ..... 19
5.5.2 Measuring equipment ..... 19
5.5.3 Greyscale matrix displays ..... 19
5.5.4 Black and white (two-level) matrix displays ..... 19

AVA Documents
Document Sharing Hub
Full document details: IEC 62679-3-3 2016

5.6 Display colour, colour gamut, and colour gamut area ....22
5.6.1 Purpose ....22
5.6.2 Measuring equipment ....22
5.6.3 Measurement method ....22
5.6.4 Display colour gamut ....22
5.6.5 Display colour gamut area ....23
5.7 Display colorimetric uniformity in a dark room ....25
5.7.1 Purpose ....25
5.7.2 Measuring equipment ....25
5.7.3 Measurement method ....25
5.7.4 Definitions and evaluations ....26
5.8 Display colour under indoor illumination ....26
5.8.1 Purpose ....26
5.8.2 Measurement conditions ....26
5.8.3 Measurement method ....27
5.8.4 Definitions and evaluations ....27
5.9 Colour gamut volume under indoor illumination ....28
5.9.1 Purpose ....28
5.9.2 Measurement conditions ....28
5.9.3 Measurement method ....28
5.9.4 Definitions and evaluations ....29
5.9.5 Recording ....30
5.10 Viewing direction dependence in a dark room ....30
5.10.1 Purpose ....30
5.10.2 Measuring conditions ....31
5.10.3 Measuring method ....31
5.10.4 Definitions and evaluations ....31
Annex A (informative) Calculation method of daylight colour gamut volume ....34
A.1 Purpose ....34
A.2 Procedure for calculating the colour gamut volume ....34
A.3 Surface subdivision method for CIELAB gamut volume calculation ....36
A.3.1 Purpose ....36
A.3.2 Assumptions ....36
A.3.3 Algorithm ....36
A.3.4 Software example ....36
Bibliography ....41

Figure 1 – Representation of the coordinate system used to specify the viewing or measurement orientation ....9
Figure 2 – Standard measurement positions ....12
Figure 3 – Window pattern for cross-talk measurement ....20
Figure 4 – Example representation of the same primary colours in the CIE 1931 (left) and CIE 1976 (right) chromaticity diagrams ....22
Figure 5 – Example of evaluation results for the colour gamut area on the $a^*b^*$ plane of the CIELAB colour space ....25
Figure 6 – An example of the range in colours produced by an sRGB display as represented by the CIELAB colour space ....29
Figure 7 – Example of contrast ratio dependence on viewing direction ....32

AVA Documents
Document Sharing Hub
Full document details: IEC 62679-3-3 2016

Figure A.1 – Analysis flow chart for calculating the colour gamut volume ..... 34
Figure A.2 – Graphical representation of the colour gamut volume for sRGB in the CIELAB colour space ..... 35

Table 1 – Eigenvalues $M_1$ and $M_2$ for CIE daylight Illuminant D50 ..... 14
Table 2 – Input signals for CIELAB and CIE UCS $u'v'$ colour gamut area measurements ..... 24
Table 3 – Example data of in-plane colour non-uniformity ..... 26
Table 4 – Example of minimum colours required for gamut volume calculation of a 3-primary 8-bit display ..... 29
Table 5 – Measured tristimulus values for the minimum set of colours (see Table 4) required for gamut volume calculation under the specified indoor illumination conditions ..... 30
Table 6 – Calculated white point in the darkened room and indoor ambient condition ..... 30
Table 7 – Colour gamut volume in the CIELAB colour space ..... 30
Table 8 – Example format used for recording viewing direction performance ..... 33
Table A.1 – Tristimulus values of the sRGB primary colours ..... 35
Table A.2 – Example of sRGB colour set represented in the CIELAB colour space ..... 35
Table A.3 – Example of an sRGB colour gamut volume in the CIELAB colour space ..... 36

Documents
Document Sharing Hub

Full document details: IEC 62679-3-3 2016

INTERNATIONAL ELECTROTECHNICAL COMMISSION

# ELECTRONIC PAPER DISPLAYS –

## Part 3-3: Optical measuring methods for displays with integrated lighting units

## FOREWORD

1) The International Electrotechnical Commission (IEC) is a worldwide organization for standardization comprising all national electrotechnical committees (IEC National Committees). The object of IEC is to promote international co-operation on all questions concerning standardization in the electrical and electronic fields. To this end and in addition to other activities, IEC publishes International Standards, Technical Specifications, Technical Reports, Publicly Available Specifications (PAS) and Guides (hereafter referred to as "IEC Publication(s)"). Their preparation is entrusted to technical committees; any IEC National Committee interested in the subject dealt with may participate in this preparatory work. International, governmental and non-governmental organizations liaising with the IEC also participate in this preparation. IEC collaborates closely with the International Organization for Standardization (ISO) in accordance with conditions determined by agreement between the two organizations.
2) The formal decisions or agreements of IEC on technical matters express, as nearly as possible, an international consensus of opinion on the relevant subjects since each technical committee has representation from all interested IEC National Committees.
3) IEC Publications have the form of recommendations for international use and are accepted by IEC National Committees in that sense. While all reasonable efforts are made to ensure that the technical content of IEC Publications is accurate, IEC cannot be held responsible for the way in which they are used or for any misinterpretation by any end user.
4) In order to promote international uniformity, IEC National Committees undertake to apply IEC Publications transparently to the maximum extent possible in their national and regional publications. Any divergence between any IEC Publication and the corresponding national or regional publication shall be clearly indicated in the latter.
5) IEC itself does not provide any attestation of conformity. Independent certification bodies provide conformity assessment services and, in some areas, access to IEC marks of conformity. IEC is not responsible for any services carried out by independent certification bodies.
6) All users should ensure that they have the latest edition of this publication.
7) No liability shall attach to IEC or its directors, employees, servants or agents including individual experts and members of its technical committees and IEC National Committees for any personal injury, property damage or other damage of any nature whatsoever, whether direct or indirect, or for costs (including legal fees) and expenses arising out of the publication, use of, or reliance upon, this IEC Publication or any other IEC Publications.
8) Attention is drawn to the Normative references cited in this publication. Use of the referenced publications is indispensable for the correct application of this publication.
9) Attention is drawn to the possibility that some of the elements of this IEC Publication may be the subject of patent rights. IEC shall not be held responsible for identifying any or all such patent rights.

International Standard 62679-3-3 has been prepared by IEC technical committee 110: Electronic display devices.

The text of this standard is based on the following documents:

| CDV | Report on voting |
|---|---|
| 110/723/CDV | 110/780/RVC |

Full information on the voting for the approval of this standard can be found in the report on voting indicated in the above table.

This publication has been drafted in accordance with the ISO/IEC Directives, Part 2.

Documents
Document Sharing Hub

Full document details: IEC 62679-3-3 2016

A list of all parts in the IEC 62679 series, published under the general title *Electronic paper displays*, can be found on the IEC website.

The committee has decided that the contents of this publication will remain unchanged until the stability date indicated on the IEC website under "http://webstore.iec.ch" in the data related to the specific publication. At this date, the publication will be

- reconfirmed,
- withdrawn,
- replaced by a revised edition, or
- amended.

A bilingual version of this publication may be issued at a later date.

**IMPORTANT – The 'colour inside' logo on the cover page of this publication indicates that it contains colours which are considered to be useful for the correct understanding of its contents. Users should therefore print this document using a colour printer.**

Documents
Document Sharing Hub

Full document details: IEC 62679-3-3 2016

# ELECTRONIC PAPER DISPLAYS –

# Part 3-3: Optical measuring methods for displays with integrated lighting units

## 1 Scope

This part of IEC 62679 specifies the standard measurement conditions and measurement methods for determining the optical performance of electronic paper display (EPD) devices which have an operating integrated lighting unit (such as a front light). The scope of this document is restricted to EPDs using segmented or matrix structures with either monochromatic or colour type displays. The measurement methods are intended for EPDs operated in a reflective mode with the integrated lighting unit (ILU) turned on in a dark or indoor ambient lighting environment. Colour systems beyond three primaries are not covered in this document.

## 2 Normative references

The following documents are referred to in the text in such a way that some or all of their content constitutes requirements for this document. For dated references, only the edition cited applies. For undated references, the latest edition of the referenced document (including any amendments) applies.

IEC 62679-1-1, *Electronic paper displays – Part 1-1: Terminology*

IEC 62679-3-1:2014, *Electronic paper displays – Part 3-1: Optical measuring methods*

IEC 61966-2-1, *Multimedia systems and equipment – Colour measurement and management – Part 2-1: Colour management – Default RGB colour space – sRGB*

CIE 15, *Colorimetry*

## 3 Terms, definitions and abbreviated terms

### 3.1 Terms and definitions

For the purposes of this document, the terms and definitions given in IEC 62679-1-1, IEC 60050-845, and the following apply.

ISO and IEC maintain terminological databases for use in standardization at the following addresses:

- IEC Electropedia: available at http://www.electropedia.org
- ISO Online browsing platform: available at http://www.iso.org/obp

**3.1.1**
**ILU**
**integrated lighting unit**
light source integrated into an EPD device to provide supplementary illumination to compensate for the lack of adequate ambient illumination

Documents
Document Sharing Hub

Full document details: IEC 62679-3-3 2016

**3.1.2**
**ambient contrast ratio**
contrast ratio of a display with both hemispherical diffuse and directional illumination incident onto its surface used to simulate real lighting environments

Note 1 to entry: In this document, the ambient contrast ratio is determined with the ILU turned on in addition to the ambient illumination incident on the display.

**3.1.3**
**colour gamut volume**
single number corresponding to the largest possible range of display colours (including all possible mixtures of the primaries, white W and black K), described as a volume in a three-dimensional colour space such as CIELAB

### 3.2 Abbreviated terms

| | |
|---|---|
| CCT | correlated colour temperature |
| CIE | International Commission on Illumination |
| CIELAB | CIE 1976 (L*a*b*) colour space |
| DUT | device under test |
| EPD | electronic paper display |
| ILU | integrated lighting unit (e.g. a front lightguide plate) |
| LMD | light-measuring device |
| RGB | red, green, blue |
| SID | Society for Information Display |
| sRGB | a standard RGB colour space as defined in IEC 61966-2-1 |

## 4 Standard measuring conditions

### 4.1 Standard environmental measuring conditions

Optical and electro-optical measurements shall be carried out under standard environmental conditions, at a temperature of 25 °C ± 3 °C, at a relative humidity of 25 % to 85 %, and at a pressure of 86 kPa to 106 kPa. When different environmental conditions are used, they shall be noted in the report.

### 4.2 Viewing direction coordinate system

The viewing direction is the direction under which the observer looks at the point of interest on the device under test (DUT). During the measurement, the light-measuring device (LMD) simulates the observer, by aiming the LMD at the point of interest on the DUT from the viewing direction. The viewing direction is defined by two angles: the angle of inclination $\theta$ (relative to the surface normal of the DUT) and the angle of rotation $\phi$ (also called azimuth angle) as illustrated in Figure 1. Although the azimuth angle is measured in the counter-clockwise direction, it is related to the directions on a clock face as follows: $\phi = 0°$ is the 3 o'clock direction ("right"), $\phi = 90°$ the 12 o'clock direction ("top"), $\phi = 180°$ the 9 o'clock direction ("left") and $\phi = 270°$ the 6 o'clock direction ("bottom").

Documents
Document Sharing Hub
Full document details: IEC 62679-3-3 2016

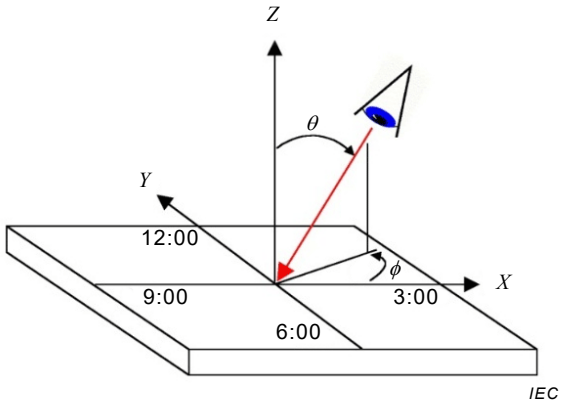


NOTE The viewing/measurement direction is specified by the angle of inclination and the angle of rotation (azimuthal angle) in a polar coordinate system.

**Figure 1 – Representation of the coordinate system used to specify the viewing or measurement orientation**

## 4.3 Standard lighting conditions

### 4.3.1 General comments and remarks on the measurement of electronic paper displays

EPDs are often used as reflective displays, where the ambient external light reflected from the active area is modulated. When there is insufficient external light, an ILU can be turned on to provide an internal source of light for the optical modulation and display of information. This document considers two cases: when the ILU is the only light source, and when it supplements indoor ambient illumination. For these cases, an EPD with an operating ILU can be treated as an emissive display, and any ambient lighting is a separate additive reflected signal.

The measurement methods in this document are performed with the ILU turned on.

Subclause 4.3 describes a selection of standard lighting conditions for measuring the performance characteristics of EPDs. EPDs may also be measured under other illumination and detection geometries in addition to the standard geometries.

A warm-up time may be necessary for both the ILU and the illumination light source. The light signal shall remain stable to within ±5 % over the course of the complete measurement.

### 4.3.2 Dark room conditions

EPDs are intended to be measured under controlled lighting conditions. Unwanted background illumination shall be minimized, typically by illuminating the display in a dark room. The dark room spectral radiance contribution from the background illumination, that is the measured spectral radiance reflected off the DUT, shall be not more than 1/100 of the spectral radiance from the device black state with the illumination source on. If this condition is not satisfied, then background subtraction is required and it shall be noted in the report. In addition, if the sensitivity of the LMD is inadequate to measure at these low levels, then the lower limit of the LMD shall be noted in the report.

Unless stated otherwise, the standard background lighting conditions shall be those of the dark room.

### 4.3.3 Standard indoor ambient illumination spectra

The following illumination conditions are specified for optical and electro-optical measurements of reflective displays under indoor ambient illumination. A combination of two

Documents
Document Sharing Hub
Full document details: IEC 62679-3-3 2016

illumination geometries is generally used to simulate ambient indoor illumination [1, 2][1]. Uniform hemispherical diffuse illumination will be used to simulate the background lighting in a room, with any rays from luminaires or sunlight blocked from directly illuminating the screen. A directed light source in a dark room will simulate the effect of directed illumination on a display by a luminaire in a room.

The following illumination conditions shall be used to simulate indoor display viewing environments:

- Uniform hemispherical diffuse illumination – Use a spectrally smooth broadband light source to photometrically approximate CIE standard illuminant A, CIE standard illuminant D65, or CIE illuminant D50 as defined in CIE 15. Better accuracy can be obtained by performing spectral measurements. For spectral measurements, a spectrally smooth broadband light source (such as an approximation to CIE standard illuminant A) shall be used. A measurement of the spectral reflectance factor using a broad light source (such as illuminant A) enables the indoor photopic and colour characteristics to be calculated later for the desired reference spectra (for example CIE illuminant D65). The performance characteristics shall be calculated using 300 lx for an indoor reading environment [3]. The actual hemispherical diffuse reflectance factor measurement may require higher illumination levels for better measurement accuracy. The results are then scaled down to the required illumination levels.
- Directed illumination – The same source spectra shall be used as with hemispherical diffuse illumination. The indoor room photopic and colour characteristics shall be calculated using directed illumination of 200 lx incident on the display surface for an indoor reading environment with the display in the vertical orientation. The actual reflectance factor measurement may require higher illumination levels for better measurement accuracy. The results are then scaled down to the required illumination levels. The directed source shall be 45° above the surface normal ($\theta_s$ = 45°) and have an angular subtense of no more than 5°. The angular subtense is defined as the full angle span of the light source from the centre of the display's measurement area.

Other illumination levels may be used in addition to those defined above for calculating the ambient contrast ratio under indoor illumination conditions.

For indoor photopic and colorimetric calculations from spectral reflectance factor measurements, the relative spectral distributions of CIE illuminants A, D50, and D65 tabulated in CIE 15 shall be used. Additional CIE daylight illuminants shall be determined using the appropriate eigenfunctions, as defined in CIE 15.

The UV region (< 380 nm) of the light source shall be cut off by a UV blocking filter. When high light-source illumination levels are used, an infrared-blocking filter is recommended to minimize device heating.

### 4.3.4 Standard illumination geometries

One or more of three types of illumination geometries shall be used for determining the performance of the EPD: directional illumination, ring light illumination, and hemispherical illumination. The standard configurations for implementing these illumination geometries are defined in IEC 62679-3-1:2014, 4.3.4. Additional illumination geometries may also be used. The details of the illumination geometry used for a given measurement shall be reported. Further guidance on the proper implementation of these illumination geometries is given in the SID Information Display Measurements Standard [1].

[1] Numbers in square brackets refer to the Bibliography.

Documents
Document Sharing Hub

Full document details: IEC 62679-3-3 2016

### 4.4 Adjustment of the EPD

The EPD (including the ILU) shall be adjusted to nominal product design values, and shall be noted in detail in the report. When there are no levels specified, the maximum contrast level shall be used and the settings noted in the report. These adjustments shall be held constant for all measurements, unless stated otherwise.

If it can be demonstrated that the reflection properties of the EPD are the same with the ILU off or on, then the reflection measurements may be performed with the ILU off.

### 4.5 Standard conditions of measuring equipment

Standard equipment conditions are given in IEC 62679-3-1:2014, 4.4. Any deviations from these conditions shall be noted in the report.

Measurements shall be started after the EPD, the source illumination, and the measuring instruments achieve stability.

### 4.6 Working standards and references

The use of specular and diffuse reflectance standards for reflection measurements are given in IEC 62679-3-1:2014, 4.5.

The terms luminous reflectance and luminous reflectance factor shall be abbreviated to reflectance and reflectance factor, respectively.

### 4.7 Standard locations of measurement field

#### 4.7.1 Matrix displays

Luminance, spectral distribution and/or tristimulus measurements may be taken at several specified positions on the DUT surface. To this end, the front view of the display is divided into 25 identical imaginary rectangles (see Figure 2). Unless otherwise specified, measurements are carried out in the centre of each rectangle. The rectangles are numbered starting from the centre, and progressing towards the edges in a clock-wise spiral fashion. Care shall be taken to ensure that the measuring fields on the display do not overlap. Positioning of the measuring field at the prescribed positions in the horizontal ($V$) and vertical ($H$) directions shall be to within 7% of $H$ and $V$, respectively. The display or detector shall be translated in the horizontal and vertical directions to perform measurements at the desired display positions, with all measurements taken normal to the screen. Any deviation from the above standard positions shall be reported.

Documents
Document Sharing Hub
Full document details: IEC 62679-3-3 2016

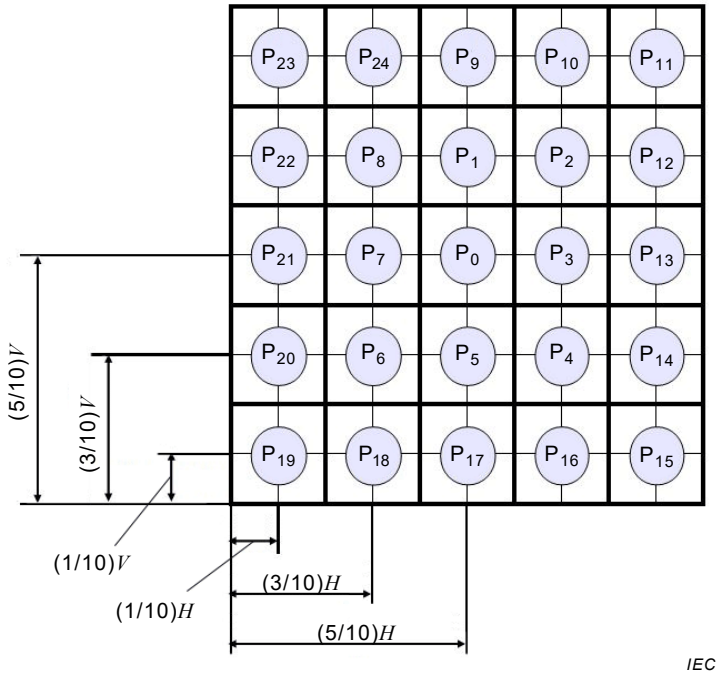


NOTE Standard measurement positions are at the centres of all rectangles $P_0$ to $P_{24}$. The height and width of each rectangle are 20 % of display height and width, respectively.

**Figure 2 – Standard measurement positions**

### 4.7.2 Segment displays

Standard measurement positions are the same as those prescribed for matrix displays above. However, for segment displays, all measurements shall be performed at the centre of a segment, and the chosen segment should be as close as possible to the centre of the designated rectangle. Thus, when measurements on position $P_i$ ($i$ = 0 to 24) are requested, the geometrical centre of the segment closest to the centre of box $P_i$ should be used for the positioning of the detector. Any deviation from the above standard positions shall be added to the detail specification.

The measuring field shall be contained entirely within the segment.

## 5 Optical measuring methods

### 5.1 Reflection measurements

### 5.1.1 General

The purpose of this method is to determine the reflectance factor of an EPD with an ILU on under defined illumination conditions. If it can be demonstrated that the reflection properties of the EPD are the same with the ILU off or on, then the reflection measurements may be performed with the ILU off.

Spectral reflectance factor measurements are generally preferred. Luminous reflectance factor measurements can be used to calculate photometric quantities (such as ambient contrast ratio), but only when the source illumination closely approximates the intended illuminant used in the analysis [4].

### 5.1.2 Measuring conditions

a) Apparatus:

Documents
Document Sharing Hub
Full document details: IEC 62679-3-3 2016