IEC 62739-2

Edition 1.0 2016-07

INTERNATIONAL STANDARD

NORME INTERNATIONALE

Test method for erosion of wave soldering equipment using molten lead-free solder alloy –
Part 2: Erosion test method for metal materials with surface processing

Méthode d'essai de l'érosion de l'équipement de brasage à la vague utilisant un alliage à braser sans plomb fondu –
Partie 2: Méthode d'essai d'érosion de matériaux métalliques avec traitement de surface

IEC 62739-2:2016-07(en-fr)

Documents
Document Sharing Hub
Full document details: IEC 62739-2 2016

THIS PUBLICATION IS COPYRIGHT PROTECTED
Copyright © 2016 IEC, Geneva, Switzerland

All rights reserved. Unless otherwise specified, no part of this publication may be reproduced or utilized in any form or by any means, electronic or mechanical, including photocopying and microfilm, without permission in writing from either IEC or IEC's member National Committee in the country of the requester. If you have any questions about IEC copyright or have an enquiry about obtaining additional rights to this publication, please contact the address below or your local IEC member National Committee for further information.

Droits de reproduction réservés. Sauf indication contraire, aucune partie de cette publication ne peut être reproduite ni utilisée sous quelque forme que ce soit et par aucun procédé, électronique ou mécanique, y compris la photocopie et les microfilms, sans l'accord écrit de l'IEC ou du Comité national de l'IEC du pays du demandeur. Si vous avez des questions sur le copyright de l'IEC ou si vous désirez obtenir des droits supplémentaires sur cette publication, utilisez les coordonnées ci-après ou contactez le Comité national de l'IEC de votre pays de résidence.

IEC Central Office
3, rue de Varembé
CH-1211 Geneva 20
Switzerland

Tel.: +41 22 919 02 11
Fax: +41 22 919 03 00
info@iec.ch
www.iec.ch

About the IEC
The International Electrotechnical Commission (IEC) is the leading global organization that prepares and publishes International Standards for all electrical, electronic and related technologies.

About IEC publications
The technical content of IEC publications is kept under constant review by the IEC. Please make sure that you have the latest edition, a corrigenda or an amendment might have been published.

IEC Catalogue - webstore.iec.ch/catalogue
The stand-alone application for consulting the entire bibliographical information on IEC International Standards, Technical Specifications, Technical Reports and other documents. Available for PC, Mac OS, Android Tablets and iPad.

IEC publications search - www.iec.ch/searchpub
The advanced search enables to find IEC publications by a variety of criteria (reference number, text, technical committee,…). It also gives information on projects, replaced and withdrawn publications.

IEC Just Published - webstore.iec.ch/justpublished
Stay up to date on all new IEC publications. Just Published details all new publications released. Available online and also once a month by email.

Electropedia - www.electropedia.org
The world's leading online dictionary of electronic and electrical terms containing 20 000 terms and definitions in English and French, with equivalent terms in 15 additional languages. Also known as the International Electrotechnical Vocabulary (IEV) online.

IEC Glossary - std.iec.ch/glossary
65 000 electrotechnical terminology entries in English and French extracted from the Terms and Definitions clause of IEC publications issued since 2002. Some entries have been collected from earlier publications of IEC TC 37, 77, 86 and CISPR.

IEC Customer Service Centre - webstore.iec.ch/csc
If you wish to give us your feedback on this publication or need further assistance, please contact the Customer Service Centre: csc@iec.ch.

A propos de l'IEC
La Commission Electrotechnique Internationale (IEC) est la première organisation mondiale qui élabore et publie des Normes internationales pour tout ce qui a trait à l'électricité, à l'électronique et aux technologies apparentées.

A propos des publications IEC
Le contenu technique des publications IEC est constamment revu. Veuillez vous assurer que vous possédez l'édition la plus récente, un corrigendum ou amendement peut avoir été publié.

Catalogue IEC - webstore.iec.ch/catalogue
Application autonome pour consulter tous les renseignements bibliographiques sur les Normes internationales, Spécifications techniques, Rapports techniques et autres documents de l'IEC. Disponible pour PC, Mac OS, tablettes Android et iPad.

Recherche de publications IEC - www.iec.ch/searchpub
La recherche avancée permet de trouver des publications IEC en utilisant différents critères (numéro de référence, texte, comité d'études,…). Elle donne aussi des informations sur les projets et les publications remplacées ou retirées.

IEC Just Published - webstore.iec.ch/justpublished
Restez informé sur les nouvelles publications IEC. Just Published détaille les nouvelles publications parues. Disponible en ligne et aussi une fois par mois par email.

Electropedia - www.electropedia.org
Le premier dictionnaire en ligne de termes électroniques et électriques. Il contient 20 000 termes et définitions en anglais et en français, ainsi que les termes équivalents dans 15 langues additionnelles. Egalement appelé Vocabulaire Electrotechnique International (IEV) en ligne.

Glossaire IEC - std.iec.ch/glossary
65 000 entrées terminologiques électrotechniques, en anglais et en français, extraites des articles Termes et Définitions des publications IEC parues depuis 2002. Plus certaines entrées antérieures extraites des publications des CE 37, 77, 86 et CISPR de l'IEC.

Service Clients - webstore.iec.ch/csc
Si vous désirez nous donner des commentaires sur cette publication ou si vous avez des questions contactez-nous: csc@iec.ch.

Documents
Document Sharing Hub

Full document details: IEC 62739-2 2016

IEC 62739-2

Edition 1.0 2016-07

INTERNATIONAL STANDARD

NORME INTERNATIONALE

Test method for erosion of wave soldering equipment using molten lead-free solder alloy – Part 2: Erosion test method for metal materials with surface processing

Méthode d'essai de l'érosion de l'équipement de brasage à la vague utilisant un alliage à braser sans plomb fondu – Partie 2: Méthode d'essai d'érosion de matériaux métalliques avec traitement de surface

INTERNATIONAL
ELECTROTECHNICAL
COMMISSION

COMMISSION
ELECTROTECHNIQUE
INTERNATIONALE

ICS 31.190; 31.240

ISBN 978-2-8322-3522-5

Warning! Make sure that you obtained this publication from an authorized distributor.
Attention! Veuillez vous assurer que vous avez obtenu cette publication via un distributeur agréé.

® Registered trademark of the International Electrotechnical Commission
Marque déposée de la Commission Electrotechnique Internationale

Documents
Document Sharing Hub

Full document details: IEC 62739-2 2016

CONTENTS

FOREWORD 3
1 Scope 5
2 Normative references 5
3 Terms and definitions 5
4 Test 6
4.1 General 6
4.2 Test equipment 6
4.2.1 Test equipment description 6
4.2.2 Configuration example of test equipment 6
4.3 Specimen 7
4.4 Test conditions 8
4.5 Test methods 9
4.5.1 Method A – Without bending 9
4.5.2 Method B – Accelerated in bended state 10
4.5.3 Dross removal procedure 11
5 Erosion depth measurement 11
5.1 General 11
5.2 Preparation of the specimen 11
5.3 Measurement equipment 12
5.4 Measurement procedure 12
6 Items to be recorded in test report 13
Annex A (normative) Specifications of test equipment and measurement equipment 14
A.1 Overview 14
A.2 Characteristics of the test equipment 14
A.2.1 General 14
A.2.2 Pot unit 14
A.2.3 Rotation unit 14
A.2.4 Control unit 14
A.2.5 Ventilation 15
A.3 Accuracy of the measurement equipment 15
A.3.1 General 15
A.3.2 Measurement accuracy 15
Bibliography 16

Figure 1 – Configuration example of test equipment 7
Figure 2 – Shape of the specimen 8
Figure 3 – Example of a specimen attachment state without bending 10
Figure 4 – Example of a specimen attachment state with 2 mm bending 11
Figure 5 – Example of measurement equipment configuration for the focal depth method using an optical microscope 12

Table 1 – Test conditions 9

Documents
Document Sharing Hub

Full document details: IEC 62739-2 2016

INTERNATIONAL ELECTROTECHNICAL COMMISSION

TEST METHOD FOR EROSION OF WAVE SOLDERING EQUIPMENT USING MOLTEN LEAD-FREE SOLDER ALLOY –

Part 2: Erosion test method for metal materials with surface processing

FOREWORD

1) The International Electrotechnical Commission (IEC) is a worldwide organization for standardization comprising all national electrotechnical committees (IEC National Committees). The object of IEC is to promote international co-operation on all questions concerning standardization in the electrical and electronic fields. To this end and in addition to other activities, IEC publishes International Standards, Technical Specifications, Technical Reports, Publicly Available Specifications (PAS) and Guides (hereafter referred to as "IEC Publication(s)"). Their preparation is entrusted to technical committees; any IEC National Committee interested in the subject dealt with may participate in this preparatory work. International, governmental and non-governmental organizations liaising with the IEC also participate in this preparation. IEC collaborates closely with the International Organization for Standardization (ISO) in accordance with conditions determined by agreement between the two organizations.
2) The formal decisions or agreements of IEC on technical matters express, as nearly as possible, an international consensus of opinion on the relevant subjects since each technical committee has representation from all interested IEC National Committees.
3) IEC Publications have the form of recommendations for international use and are accepted by IEC National Committees in that sense. While all reasonable efforts are made to ensure that the technical content of IEC Publications is accurate, IEC cannot be held responsible for the way in which they are used or for any misinterpretation by any end user.
4) In order to promote international uniformity, IEC National Committees undertake to apply IEC Publications transparently to the maximum extent possible in their national and regional publications. Any divergence between any IEC Publication and the corresponding national or regional publication shall be clearly indicated in the latter.
5) IEC itself does not provide any attestation of conformity. Independent certification bodies provide conformity assessment services and, in some areas, access to IEC marks of conformity. IEC is not responsible for any services carried out by independent certification bodies.
6) All users should ensure that they have the latest edition of this publication.
7) No liability shall attach to IEC or its directors, employees, servants or agents including individual experts and members of its technical committees and IEC National Committees for any personal injury, property damage or other damage of any nature whatsoever, whether direct or indirect, or for costs (including legal fees) and expenses arising out of the publication, use of, or reliance upon, this IEC Publication or any other IEC Publications.
8) Attention is drawn to the Normative references cited in this publication. Use of the referenced publications is indispensable for the correct application of this publication.
9) Attention is drawn to the possibility that some of the elements of this IEC Publication may be the subject of patent rights. IEC shall not be held responsible for identifying any or all such patent rights.

International Standard IEC 62739-2 has been prepared by IEC technical committee 91: Electronics assembly technology.

The text of this standard is based on the following documents:

FDIS	Report on voting
91/1365/FDIS	91/1379/RVD

Full information on the voting for the approval of this standard can be found in the report on voting indicated in the above table.

This publication has been drafted in accordance with the ISO/IEC Directives, Part 2.

Documents
Document Sharing Hub

Full document details: IEC 62739-2 2016

A list of all parts in the IEC 62739 series, published under the general title *Test method for erosion of wave soldering equipment using molten lead-free solder alloy*, can be found on the IEC website.

The committee has decided that the contents of this publication will remain unchanged until the stability date indicated on the IEC website under "http://webstore.iec.ch" in the data related to the specific publication. At this date, the publication will be

- reconfirmed,
- withdrawn,
- replaced by a revised edition, or
- amended.

Documents
Document Sharing Hub

Full document details: IEC 62739-2 2016

TEST METHOD FOR EROSION OF WAVE SOLDERING EQUIPMENT USING MOLTEN LEAD-FREE SOLDER ALLOY –

Part 2: Erosion test method for metal materials with surface processing

1 Scope

This part of IEC 62739 provides an evaluating test method for the erosion of the metallic materials with surface processing intended to be used for lead-free wave soldering equipment as a solder bath and other components which are in contact with the molten solder. It aims at prevention of an accident or a fire by predicting a setup and life of a suitable maintenance cycle.

2 Normative references

The following documents, in whole or in part, are normatively referenced in this document and are indispensable for its application. For dated references, only the edition cited applies. For undated references, the latest edition of the referenced document (including any amendments) applies.

IEC 61190-1-3, *Attachment materials for electronic assembly – Part 1-3: Requirements for electronic grade solder alloys and fluxed and non-fluxed solid solders for electronic soldering applications*

3 Terms and definitions

For the purposes of this document, the following terms and definitions apply.

3.1
erosion
phenomenon where a base material is dissolved and made thinner by coming into contact with molten solder

[SOURCE: IEC 62739-1:2013, 3.1]

3.2
lead-free solder
alloy that does not contain more than 0,1 % lead (Pb) by weight and used for joining components to substrates or for coating surfaces

[SOURCE: IEC 60194:2015, 75.1904]

3.3
dross
oxide and other contaminants that form on the surface of molten solder

[SOURCE: IEC 60194:2015, 75.0410]

Documents
Document Sharing Hub

Full document details: IEC 62739-2 2016

4 Test

4.1 General

The specimen is mounted to the rotation block of the test equipment which is driven by the motor (may include gear unit) then immersed into molten lead-free solder and rotated to simulate solder flow in the wave soldering equipment. The erosion depth is measured after the block is rotated for a designated period of time.

4.2 Test equipment

4.2.1 Test equipment description

Test equipment shall include equipment that realises the test conditions specified in 4.4.

Component materials of the test equipment which come in contact with molten solder shall be erosion resistant or processed to be erosion resistant.

Details of the specifications of the equipment are given in Annex A.

4.2.2 Configuration example of test equipment

An example of the configuration of the test equipment is shown in Figure 1.

The test equipment consists of a pot unit, rotation unit, and control unit:

a) the pot unit consists of a heater to melt the lead-free solder alloy and a pot in which a specimen can rotate.
b) the rotation unit consists of a motor which rotates the specimen and a rotation block to which the specimen is attached.
c) the control unit has functions to control the heater, using a temperature sensor, control mechanism and motor rotation.

Since dross spreads during the test, it is preferable for the test equipment to have a ventilatory function with an exhaust air duct.

Other test equipment can be used if its configuration and functions meet the above requirements.

Documents
Document Sharing Hub
Full document details: IEC 62739-2 2016

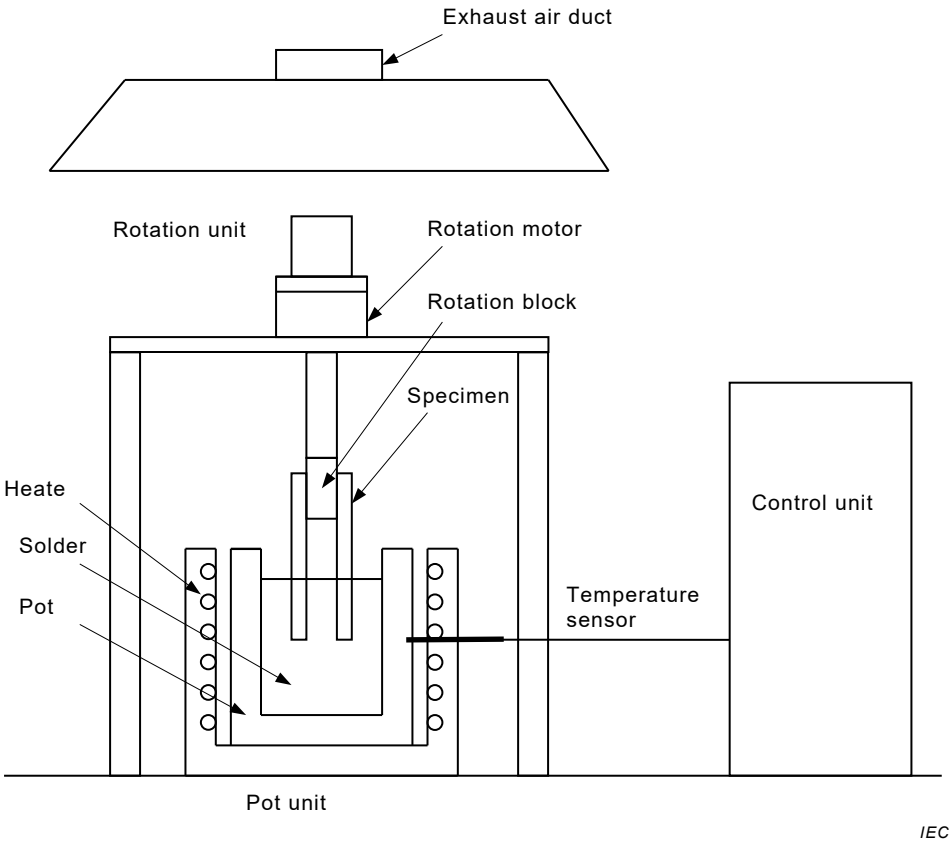

Figure 1 – Configuration example of test equipment

4.3 Specimen

A specimen of the following material and shape is used.

a) The surface processing of the specimen shall be the same as that of the solder bath and its components which come into contact with the molten solder.

b) The shape of specimen and the indication of the surface processing designation shall be as shown in Figure 2. The indication shall be engraved.

c) The surfaces of the specimen to be evaluated shall be the surface with surface processing indication (face A) and its backside (face B), and from the lower edge to 50 mm above it.

Documents
Document Sharing Hub
Full document details: IEC 62739-2 2016

Dimensions in millimetres

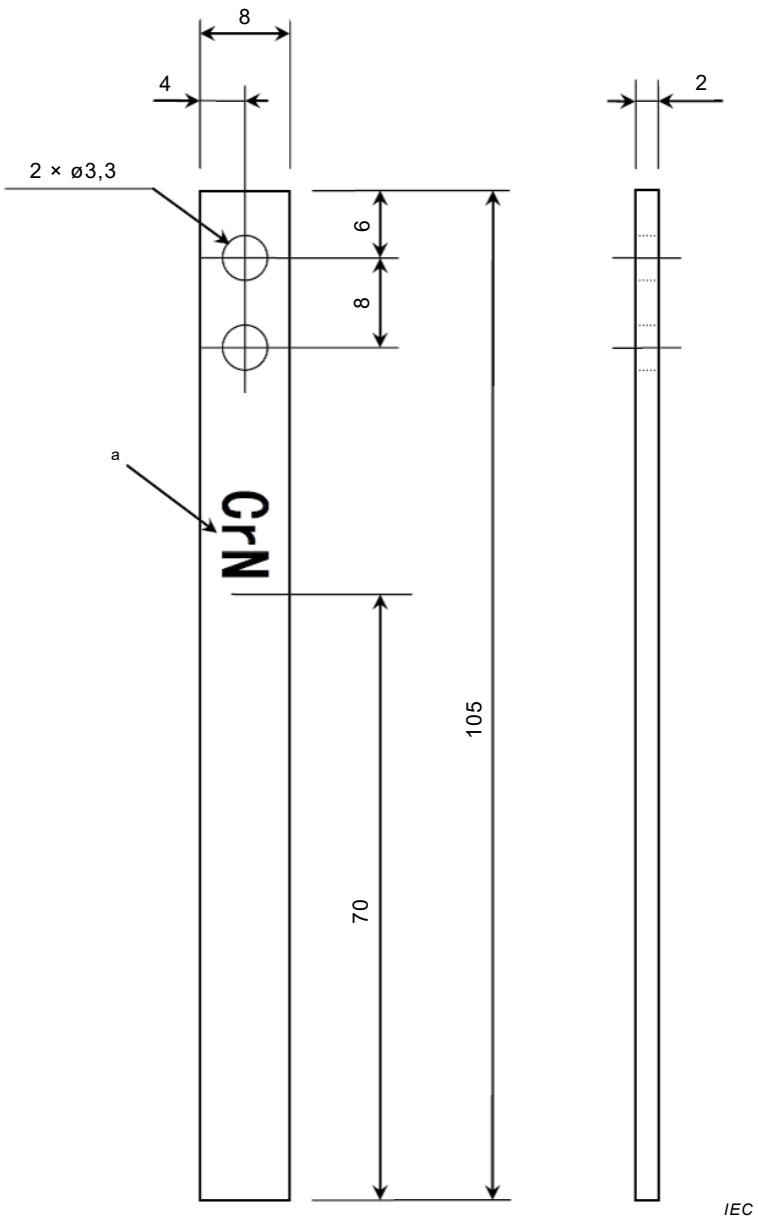

Key

[a] Engraved mark

Figure 2 – Shape of the specimen

4.4 Test conditions

Test materials and test conditions are shown in Table 1.

Documents
Document Sharing Hub
Full document details: IEC 62739-2 2016

Table 1 – Test conditions

Composition of test solder alloy	Sn96,5Ag3Cu,5 specified in IEC 61190-1-3 shall be used if not otherwise specified in individual standards.
Solder temperature (at measurement position)	450 °C ±3 °C (the temperature is measured at a depth of 35 mm to 40 mm from the solder surface and at a distance of 20 mm to 30 mm from the specimen).
Rotation speed of specimen	100 r/min ±3 r/min.
Rotation radius of specimen	6 mm to 8 mm (from the centre of the rotation block to the outer edge of the specimen).
Dipping depth of specimen	65 mm to 70 mm (from molten solder surface to the lower edge of the specimen).
Test duration	Suitable test time needs to be set up in advance.
Frequency of removal of dross	A minimum of once every 16 h.
The time until erosion shows varies in accordance with the surface processing of the specimen. The appropriate test duration that shows the difference of the erosion depth depending on the surface processing, should be defined before performing the test. Care shall be taken to keep the uneroded area clean since this area is used as the base of the erosion measurement.	

4.5 Test methods

4.5.1 Method A – Without bending

If no further acceleration is demanded, the test without bending is conducted following the steps outlined below.

a) Clean the surface of the specimen with gauze or a paper towel.

b) The specimen shall be attached to the rotation block with face B touching the block, without contacting the molten solder.

c) Remove the dross floating on the molten solder in the pot following the dross removal procedure specified in 4.5.3. Dip the specimen attached to the rotation block into the molten solder maintained at the specified temperature. The specimen should be dipped in the molten solder to the depth specified in 4.4 and rotated by the rotation motor at the rotation speed specified in 4.4. After the rotation is complete, start measuring the elapsed time of the test. An example of a specimen attachment state without bending is shown in Figure 3.

d) Remove the specimen from the molten solder within 2 h after the test duration reaches to a specified value, and wipe off the solder completely from the specimen with a waste cloth.

e) The dross floating on the molten solder in the pot is removed at the frequency specified in 4.4.

f) After the test duration specified in 4.4, measure the depth of the erosion by the method specified in Clause 5.

g) Do not remove the specimen from the molten solder until the elapsed time of a test has reached the rated value, which includes the time for removing the dross and the equipment down time during the night.

Documents
Document Sharing Hub
Full document details: IEC 62739-2 2016