IEC 62769-2

Edition 2.0 2021-02
REDLINE VERSION

INTERNATIONAL STANDARD

colour inside

Field device integration (FDI) – Part 2: FDI Client

IEC 62769-2:2021-02 RLV(en)

Documents
Document Sharing Hub

Full document details: IEC 62769-2 2021 RLV

THIS PUBLICATION IS COPYRIGHT PROTECTED
Copyright © 2021 IEC, Geneva, Switzerland

All rights reserved. Unless otherwise specified, no part of this publication may be reproduced or utilized in any form or by any means, electronic or mechanical, including photocopying and microfilm, without permission in writing from either IEC or IEC's member National Committee in the country of the requester. If you have any questions about IEC copyright or have an enquiry about obtaining additional rights to this publication, please contact the address below or your local IEC member National Committee for further information.

IEC Central Office
3, rue de Varembé
CH-1211 Geneva 20
Switzerland

Tel.: +41 22 919 02 11
info@iec.ch
www.iec.ch

About the IEC
The International Electrotechnical Commission (IEC) is the leading global organization that prepares and publishes International Standards for all electrical, electronic and related technologies.

About IEC publications
The technical content of IEC publications is kept under constant review by the IEC. Please make sure that you have the latest edition, a corrigendum or an amendment might have been published.

IEC publications search - webstore.iec.ch/advsearchform
The advanced search enables to find IEC publications by a variety of criteria (reference number, text, technical committee, …). It also gives information on projects, replaced and withdrawn publications.

IEC Just Published - webstore.iec.ch/justpublished
Stay up to date on all new IEC publications. Just Published details all new publications released. Available online and once a month by email.

IEC Customer Service Centre - webstore.iec.ch/csc
If you wish to give us your feedback on this publication or need further assistance, please contact the Customer Service Centre: sales@iec.ch.

IEC online collection - oc.iec.ch
Discover our powerful search engine and read freely all the publications previews. With a subscription you will always have access to up to date content tailored to your needs.

Electropedia - www.electropedia.org
The world's leading online dictionary on electrotechnology, containing more than 22 000 terminological entries in English and French, with equivalent terms in 18 additional languages. Also known as the International Electrotechnical Vocabulary (IEV) online.

Documents
Document Sharing Hub

Full document details: IEC 62769-2 2021 RLV

IEC 62769-2

Edition 2.0 2021-02
REDLINE VERSION

INTERNATIONAL STANDARD

colour inside

Field device integration (FDI) – Part 2: FDI Client

INTERNATIONAL
ELECTROTECHNICAL
COMMISSION

ICS 25.040.40; 35.100.05

ISBN 978-2-8322-9386-7

Warning! Make sure that you obtained this publication from an authorized distributor.

® Registered trademark of the International Electrotechnical Commission

Documents
Document Sharing Hub

Full document details: IEC 62769-2 2021 RLV

CONTENTS

FOREWORD 10
INTRODUCTION 2
1 Scope 14
2 Normative references 14
3 Terms, definitions, abbreviated terms~~, acronyms~~ and conventions 15
3.1 Terms and definitions 16
3.1.1 Terms used for Services 16
3.1.2 Terms used for Device Access Services 16
3.2 Abbreviated terms~~ and acronyms~~ 17
3.3 Conventions 17
4 Overview 17
5 FDI Client 18
5.1 Device Access Services 18
5.1.1 General 18
5.1.2 Device Model 19
5.1.3 Node model 20
5.1.4 Services 27
5.1.5 Base Property Services 31
5.1.6 Device Model Services 32
5.1.7 Locking Services 45
5.1.8 Direct Access Services 47
5.1.9 Data types 49
5.2 Hosting Services 54
5.2.1 General 54
5.2.2 Services 54
5.2.3 Parameter Type Definitions 66
6 UIP 68
6.1 UIP Services 68
6.1.1 Services 68
6.1.2 Parameter type definitions 71
6.2 UIP instantiation rules 73
6.3 UIP state machine 73
6.3.1 States 73
6.3.2 State transitions 74
6.4 UIP permissions and restrictions 75
6.4.1 Introduction 75
6.4.2 Access to local file system 75
6.4.3 Export/Import of files 76
6.4.4 Inter-Process Communication (IPC) 76
6.4.5 Open files based on MIME Type 76
6.4.6 Access to resources 76
6.5 UIP deployment 76
6.5.1 UIP downloads from FDI Server 76
6.5.2 UIP management on FDI Client 78
7 Actions 78

AVA Documents
Document Sharing Hub

Full document details: IEC 62769-2 2021 RLV

7.1 General ... 78
7.2 Sequence diagram ... 79
7.3 FDI Action schema definition ... 82
8 User Interface Description (UID) ... 83
8.1 Overview ... 83
8.2 UID execution ... 85
Annex A (normative) XML schema ... 89
A.1 General ... 89
A.2 AbortRequestT ... 89
A.3 AccessT ... 89
A.4 AcknowledgementRequestT ... 90
A.5 ActionListT ... 90
A.6 AbortingNotificationT ... 91
A.7 ActionRequestT ... 91
A.8 ActionResponseT ... 92
A.9 ActionT ... 93
A.10 AxisListT ... 94
A.11 AxisT ... 94
A.12 BitEnumerationItemListT ... 95
A.13 BitEnumerationItemT ... 95
A.14 ButtonListT ... 96
A.15 ChartT ... 96
A.16 ChartTypeT ... 97
A.17 ColorNameT ... 98
A.18 ColorT ... 99
A.19 ColorValueT ... 99
A.20 ColumnBreakT ... 99
A.21 DateTimeDataT ... 100
A.22 DelayMessageRequestT ... 100
A.23 DiagramLineT ... 101
A.24 EnumerationItemListT ... 102
A.25 EnumerationItemT ... 102
A.26 FormatSpecifierT ... 103
A.27 GraphT ... 103
A.28 GridT ... 104
A.29 HandlingT ... 104
A.30 ImageT ... 105
A.31 InfoRequestT ... 106
A.32 InputRequestT ... 106
A.33 InputResponseT ... 107
A.34 InputValueT ... 107
A.35 InputValueTypeT ... 108
A.36 LabelHelpT ... 108
A.37 LabelT ... 109
A.38 LineTypeT ... 109
A.39 MenuT ... 110
A.40 MenuReferenceT ... 112
A.41 MenuStyleT ... 113
A.42 NumericDataT ... 113

AVA Documents
Document Sharing Hub
Full document details: IEC 62769-2 2021 RLV

A.43 NumericTemplateT ... 114
A.44 OptionListT ... 114
A.45 OrientationT ... 115
A.46 ParameterInputRequestT ... 115
A.47 ParameterListT ... 116
A.48 ParameterT ... 116
A.49 PluginT ... 118
A.50 RangeListT ... 118
A.51 RangeT ... 119
A.52 ResponseT ... 119
A.53 RowBreakT ... 119
A.54 ScalingT ... 120
A.55 SelectionRequestT ... 120
A.56 SelectionResponseT ... 121
A.57 SeparatorT ... 121
A.58 SizeT ... 121
A.59 ParameterClassT ... 122
A.60 ActionClassT ... 123
A.61 SourceListT ... 125
A.62 SourceT ... 126
A.63 StringDataT ... 126
A.64 StringTemplateT ... 127
A.65 StringOptionListT ... 127
A.66 StringOptionT ... 128
A.67 StringT ... 128
A.68 TimeScaleT ... 129
A.69 UidLayoutInformation ... 129
A.70 UidRequestT ... 130
A.71 UidResponseT ... 130
A.72 UiElementSizeableT ... 131
A.73 UiElementT ... 131
A.74 UiTemplateT ... 132
A.75 VariantT ... 133
A.76 VariantOptionListT ... 134
A.77 VariantOptionT ... 134
A.78 VectorListT ... 135
A.79 VectorT ... 135
A.80 WaveformListT ... 136
A.81 WaveformT ... 136
A.82 WaveformTypeT ... 137
A.83 WaveformTypeHorizontalT ... 137
A.84 WaveformTypeVerticalT ... 137
A.85 WaveformTypeYTT ... 138
A.86 WaveformTypeXYT ... 139
A.87 WaveformKeyPointListT ... 140
A.88 WaveformVectorT ... 140
A.89 WaveformVectorElementListT ... 141
A.90 WaveformVectorElementT ... 141
Annex B (informative) Action example ... 143

AVA Documents
Document Sharing Hub
Full document details: IEC 62769-2 2021 RLV

Annex C (informative) Typical FDI Client use cases 152
C.1 General 152
C.2 Bulk operations 152
C.3 Progress bar support 152
Bibliography 154

Figure 1 – FDI architecture diagram 14
Figure 2 – Overall structure of a Device 19
Figure 3 – Structure of Blocks 20
Figure 4 – Device Model NodeClasses 20
Figure 5 – Example: Variable hierarchy representing a RECORD 25
Figure 6 – Variable hierarchy representing a VALUE_ARRAY of RECORDs 26
Figure 7 – UIP state machine 74
Figure 8 – FDI Action sequence diagram 80
Figure 9 – User Interface Descriptions 84
Figure 10 – User Interface Description sequence diagram 86
Figure B.1 – Action example (step 1) 146
Figure B.2 – Action example (step 2) 147
Figure B.3 – Action example (step 3) 148
Figure B.4 – Action example (step 4) 149
Figure B.5 – Action example (step 5) 150
Figure B.6 – Action example (step 6) 151
Figure C.1 – Progress bar support 153

Table 1 – BaseNodeClass Attributes 21
Table 2 – Object NodeClass Attributes 21
Table 3 – Variable NodeClass Attributes 22
Table 4 – Parsing of the initial bytes 24
Table 5 – Service Definition Table 27
Table 6 – StatusCode Bit Assignments 29
Table 7 – DataValue InfoBits 29
Table 8 – Service result codes 30
Table 9 – Operation level result codes 30
Table 10 – GetDeviceAccessInterfaceVersion Service parameters 32
Table 11 – GetOnlineAccessAvailability Service parameters 32
Table 12 – Browse Service parameters 33
Table 13 – CancelBrowse Service parameters 34
Table 14 – Read Service parameters 35
Table 15 – Read Service result codes 35
Table 16 – Read operation result codes 36
Table 17 – CancelRead Service parameters 37
Table 18 – Write Service parameters 38
Table 19 – Write operation result codes 38

AVA Documents
Document Sharing Hub

Full document details: IEC 62769-2 2021 RLV

Table 20 – CancelWrite Service parameters 39
Table 21 – CreateSubscription Service parameters 40
Table 22 – CreateSubscription Service result codes 40
Table 23 – Subscribe Service parameters 41
Table 24 – Subscribe operation result codes 43
Table 25 – Unsubscribe Service Parameters 43
Table 26 – Unsubscribe operation result codes 43
Table 27 – DeleteSubscription Service parameters 44
Table 28 – DataChangeCallback Service parameters 44
Table 29 – DataChangeCallback result codes 45
Table 30 – InitLock Service parameters 46
Table 31 – InitLock Service result codes 46
Table 32 – ExitLock Service parameters 46
Table 33 – ExitLock Service result codes 46
Table 34 – InitDirectAccess Service parameters 47
Table 35 – InitDirectAccess Service result codes 48
Table 36 – ExitDirectAccess Service parameters 48
Table 37 – ExitDirectAccess Service result codes 48
Table 38 – Transfer Service parameters 49
Table 39 – Transfer Service result codes 49
Table 40 – Base data types 49
Table 41 – Identifiers assigned to Attributes 50
Table 42 – NodeSpecifier 51
Table 43 – DataValue 51
Table 44 – InnerErrorInfo 52
Table 45 – LocalizedText Definition 52
Table 46 – LocaleId Examples 53
Table 47 – Range Data Type Structure 53
Table 48 – EUInformation Data Type Structure 54
Table 49 – EnumValueType Definition 54
Table 50 – GetClientTechnologyVersion Service parameters 55
Table 51 – OpenUserInterface Service parameters 55
Table 52 – LogAuditTrailMessage Service parameters 56
Table 53 – SaveUserSettings Service parameters 57
Table 54 – LoadUserSettings Service parameters 57
Table 55 – Trace Service parameters 57
Table 56 – ShowMessageBox Service parameters 58
Table 57 – ShowProgressBar Service parameters 58
Table 58 – UpdateShowProgressBar Service parameters 59
Table 59 – EndShowProgressBar Service parameters 59
Table 60 – StandardUIActionItemsChange Service parameters 60
Table 61 – SpecificUIActionItemsChange Service parameters 60
Table 62 – InitExportFile Service parameters 61

AVA Documents
Document Sharing Hub

Full document details: IEC 62769-2 2021 RLV

Table 63 – WriteExportFile Service parameters 61
Table 64 – FinishExportFile Service parameters 62
Table 65 – InitImportFile Service parameters 62
Table 66 – ReadImportFile Service parameters 63
Table 67 – FinishImportFile Service parameters 63
Table 68 – InitOpenDefaultApplication Service parameters 64
Table 69 – WriteOpenDefaultApplication Service parameters 65
Table 70 – FinishOpenDefaultApplication Service parameters 65
Table 71 – GetHostingProperties Service parameters 66
Table 72 – GetHostingProperties Key Value Pairs 66
Table 73 – DefaultResult definition 67
Table 74 – ButtonSet definition 67
Table 75 – AcknStyle definition 67
Table 76 – Activate Service parameters 68
Table 77 – Deactivate Service parameters 69
Table 78 – SetSystemLabel Service parameters 69
Table 79 – SetTraceLevel Service parameters 70
Table 80 – GetStandardUIActionItems Service parameters 70
Table 81 – GetSpecificUIActionItems Service parameters 71
Table 82 – InvokeStandardUIAction Service parameters 71
Table 83 – InvokeSpecificUIAction Service parameters 71
Table 84 – TraceLevel definition 72
Table 85 – StandardUIAction definition 72
Table 86 – StandardUIActionItem definition 73
Table 87 – SpecificUIActionItem definition 73
Table 88 – UIP states 74
Table 89 – UIP state transitions 74
Table A.1 – Elements of AbortRequestT 89
Table A.2 – Enumerations of AccessT 90
Table A.3 – Elements of AcknowledgementRequestT 90
Table A.4 – Elements of ActionListT 90
Table A.5 – Elements of ActionRequestT 92
Table A.6 – Elements of ActionResponseT 93
Table A.7 – Elements of ActionT 93
Table A.8 – Elements of AxisListT 94
Table A.9 – Attributes of AxisT 95
Table A.10 – Elements of AxisT 95
Table A.11 – Elements of BitEnumerationItemListT 95
Table A.12 – Elements of BitEnumerationItemT 96
Table A.13 – Elements of ButtonListT 96
Table A.14 – Elements of ChartT 97
Table A.15 – Enumerations of ChartTypeT 98
Table A.16 – Enumerations of ColorNameT 99

AVA Documents
Document Sharing Hub

Full document details: IEC 62769-2 2021 RLV

Table A.17 – Enumerations of DateTimeDataT 100
Table A.18 – Elements of DelayMessageRequestT 101
Table A.19 – Attributes of DiagramLineT 101
Table A.20 – Elements of DiagramLineT 102
Table A.21 – Elements of EnumerationItemListT 102
Table A.22 – Elements of EnumerationItemT 103
Table A.23 – Elements of GraphT 104
Table A.24 – Elements of GridT 104
Table A.25 – Enumerations of HandlingT 105
Table A.26 – Attributes of ImageT 106
Table A.27 – Elements of ImageT 106
Table A.28 – Elements of InfoRequestT 106
Table A.29 – Elements of InputRequestT 107
Table A.30 – Elements of InputResponseT 107
Table A.31 – Elements of InputValueT 108
Table A.32 – Elements of InputValueTypeT 108
Table A.33 – Elements of LabelHelpT 109
Table A.34 – Elements of LabelT 109
Table A.35 – Enumerations of LineTypeT 110
Table A.36 – Attributes of MenuT 111
Table A.37 – Elements of MenuT 112
Table A.38 – Attributes of MenuReferenceT 112
Table A.39 – Elements of MenuReferenceT 112
Table A.40 – Enumerations of MenuStyleT 113
Table A.41 – Enumerations of NumericDataT 114
Table A.42 – Elements of NumericTemplateT 114
Table A.43 – Elements of OptionListT 115
Table A.44 – Enumerations of OrientationT 115
Table A.45 – Elements of ParameterInputRequestT 115
Table A.46 – Elements of ParameterListT 116
Table A.47 – Elements of ParameterT 117
Table A.48 – Elements of PluginT 118
Table A.49 – Elements of RangeListT 119
Table A.50 – Elements of RangeT 119
Table A.51 – Enumerations of ScalingT 120
Table A.52 – Elements of SelectionRequestT 120
Table A.53 – Elements of SelectionResponseT 121
Table A.54 – Enumerations of SizeT 122
Table A.55 – Enumerations of ParameterClassT 123
Table A.56 – Enumerations of ActionClassT 125
Table A.57 – Elements of SourceListT 126
Table A.58 – Elements of SourceT 126
Table A.59 – Enumerations of StringDataT 127

AVA Documents
Document Sharing Hub
Full document details: IEC 62769-2 2021 RLV

Table A.60 – Elements of StringTemplateT 127
Table A.61 – Elements of StringOptionListT 128
Table A.62 – Elements of StringOptionT 128
Table A.63 – Elements of StringT 129
Table A.64 – Enumerations of TimeScaleT 129
Table A.65 – Elements of UidLayoutInformation 130
Table A.66 – Elements of UidRequestT 130
Table A.67 – Elements of UidResponseT 131
Table A.68 – Attributes of UiElementSizeableT 131
Table A.69 – Elements of UiElementSizeableT 131
Table A.70 – Elements of UiElementT 132
Table A.71 – Elements of UiTemplateT 133
Table A.72 – Elements of VariantT 134
Table A.73 – Elements of VariantOptionListT 134
Table A.74 – Elements of VariantOptionT 135
Table A.75 – Elements of VectorListT 135
Table A.76 – Elements of VectorT 136
Table A.77 – Elements of WaveformListT 136
Table A.78 – Elements of WaveformT 137
Table A.79 – Elements of WaveformTypeHorizontalT 137
Table A.80 – Elements of WaveformTypeVerticalT 138
Table A.81 – Elements of WaveformTypeYTT 139
Table A.82 – Elements of WaveformTypeXYT 139
Table A.83 – Elements of WaveformKeyPointListT 140
Table A.84 – Attributes of WaveformVectorT 141
Table A.85 – Elements of WaveformVectorT 141
Table A.86 – Elements of WaveformVectorElementListT 141
Table A.87 – Elements of WaveformVectorElementT 142

Documents
Document Sharing Hub
Full document details: IEC 62769-2 2021 RLV

INTERNATIONAL ELECTROTECHNICAL COMMISSION

FIELD DEVICE INTEGRATION (FDI) –

Part 2: FDI Client

FOREWORD

1) The International Electrotechnical Commission (IEC) is a worldwide organization for standardization comprising all national electrotechnical committees (IEC National Committees). The object of IEC is to promote international co-operation on all questions concerning standardization in the electrical and electronic fields. To this end and in addition to other activities, IEC publishes International Standards, Technical Specifications, Technical Reports, Publicly Available Specifications (PAS) and Guides (hereafter referred to as "IEC Publication(s)"). Their preparation is entrusted to technical committees; any IEC National Committee interested in the subject dealt with may participate in this preparatory work. International, governmental and non-governmental organizations liaising with the IEC also participate in this preparation. IEC collaborates closely with the International Organization for Standardization (ISO) in accordance with conditions determined by agreement between the two organizations.
2) The formal decisions or agreements of IEC on technical matters express, as nearly as possible, an international consensus of opinion on the relevant subjects since each technical committee has representation from all interested IEC National Committees.
3) IEC Publications have the form of recommendations for international use and are accepted by IEC National Committees in that sense. While all reasonable efforts are made to ensure that the technical content of IEC Publications is accurate, IEC cannot be held responsible for the way in which they are used or for any misinterpretation by any end user.
4) In order to promote international uniformity, IEC National Committees undertake to apply IEC Publications transparently to the maximum extent possible in their national and regional publications. Any divergence between any IEC Publication and the corresponding national or regional publication shall be clearly indicated in the latter.
5) IEC itself does not provide any attestation of conformity. Independent certification bodies provide conformity assessment services and, in some areas, access to IEC marks of conformity. IEC is not responsible for any services carried out by independent certification bodies.
6) All users should ensure that they have the latest edition of this publication.
7) No liability shall attach to IEC or its directors, employees, servants or agents including individual experts and members of its technical committees and IEC National Committees for any personal injury, property damage or other damage of any nature whatsoever, whether direct or indirect, or for costs (including legal fees) and expenses arising out of the publication, use of, or reliance upon, this IEC Publication or any other IEC Publications.
8) Attention is drawn to the Normative references cited in this publication. Use of the referenced publications is indispensable for the correct application of this publication.
9) Attention is drawn to the possibility that some of the elements of this IEC Publication may be the subject of patent rights. IEC shall not be held responsible for identifying any or all such patent rights.

This redline version of the official IEC Standard allows the user to identify the changes made to the previous edition IEC 62769-2:2015. A vertical bar appears in the margin wherever a change has been made. Additions are in green text, deletions are in strikethrough red text.

Documents
Document Sharing Hub

Full document details: IEC 62769-2 2021 RLV

International Standard IEC 62769-2 has been prepared by subcommittee 65E: Devices and integration in enterprise systems, of IEC technical committee 65: Industrial-process measurement, control and automation.

This second edition cancels and replaces the first edition published in 2015. This edition constitutes a technical revision.

This edition includes the following significant technical changes with respect to the previous edition:

a) running UIPs in a sandbox.

The text of this International Standard is based on the following documents:

FDIS	Report on voting
65E/759/FDIS	65E/769/RVD

Full information on the voting for the approval of this International Standard can be found in the report on voting indicated in the above table.

This document has been drafted in accordance with the ISO/IEC Directives, Part 2.

A list of all parts in the IEC 62769 series, published under the general title *Field Device Integration (FDI)*, can be found on the IEC website.

The committee has decided that the contents of this document will remain unchanged until the stability date indicated on the IEC website under "http://webstore.iec.ch" in the data related to the specific document. At this date, the document will be

- reconfirmed,
- withdrawn,
- replaced by a revised edition, or
- amended.

IMPORTANT – The 'colour inside' logo on the cover page of this publication indicates that it contains colours which are considered to be useful for the correct understanding of its contents. Users should therefore print this document using a colour printer.

Documents
Document Sharing Hub

Full document details: IEC 62769-2 2021 RLV

INTRODUCTION

~~The International Electrotechnical Commission (IEC) draws attention to the fact that it is claimed that compliance with this document may involve the use of patents concerning~~

~~a) Method for the supplying and installation of device-specific functionalities, see Patent Family DE10357276;~~

~~b) Method and device for accessing a functional module of automation system, see Patent Family EP2182418;~~

~~c) Methods and apparatus to reduce memory requirements for process control system software applications, see Patent Family US2013232186;~~

~~d) extensible device object model, see Patent Family US12/893,680.~~

~~IEC takes no position concerning the evidence, validity and scope of this patent right.~~

~~The holders of these patent rights have assured the IEC that he/she is willing to negotiate licences either free of charge or under reasonable and non-discriminatory terms and conditions with applicants throughout the world. In this respect, the statement of the holder of this patent right is registered with IEC. Information may be obtained from:~~

~~a) ABB Research Ltd~~
~~Claes Rytoft~~
~~Affolterstrasse 4~~
~~Zurich, 8050~~
~~Switzerland~~

~~b) Phoenix Contact GmbH & Co KG~~
~~Intellectual Property, Licenses & Standards~~
~~Flachsmarktstrasse 8, 32825 Blomberg~~
~~Germany~~

~~c) Fisher Controls International LLC~~
~~John Dilger, Emerson Process Management LLLP~~
~~301 S. 1st Avenue, Marshaltown, Iowa 50158~~
~~USA~~

~~d) Rockwell Automation Technologies, Inc.~~
~~1 Allen-Bradley Drive~~
~~Mayfield Heights, Ohio 44124~~
~~USA~~

~~Attention is drawn to the possibility that some of the elements of this document may be the subject of patent rights other than those identified above. IEC shall not be held responsible for identifying any or all such patent rights.~~

~~ISO (www.iso.org/patents) and IEC (http://patents.iec.ch) maintain on-line data bases of patents relevant to their standards. Users are encouraged to consult the data bases for the most up-to-date information concerning patents.~~

The IEC 62769 series has the general title *Field Device Integration (FDI)* and the following parts:

– Part 1: Overview
– Part 2: FDI Client
– Part 3: FDI Server
– Part 4: FDI Packages
– Part 5: FDI Information Model
– Part 6: FDI Technology Mapping
– Part 7: FDI Communication Devices

Documents
Document Sharing Hub

Full document details: IEC 62769-2 2021 RLV

- Part 100: Profiles – Generic Protocol Extensions
- Part 101-1: Profiles – Foundation Fieldbus H1
- Part 101-2: Profiles – Foundation Fieldbus HSE
- Part 103-1: Profiles – PROFIBUS
- Part 103-4: Profiles – PROFINET
- Part 109-1: Profiles – HART and WirelessHART
- Part 115-2: Profiles – Protocol-specific Definitions for Modbus RTU
- Part 150-1: Profiles – ISA 100.11a

Documents
Document Sharing Hub

Full document details: IEC 62769-2 2021 RLV

FIELD DEVICE INTEGRATION (FDI) –

Part 2: FDI Client

1 Scope

This part of IEC 62769 specifies the FDI Client. The overall FDI architecture is illustrated in Figure 1. The architectural components that are within the scope of this document have been highlighted in this figure.

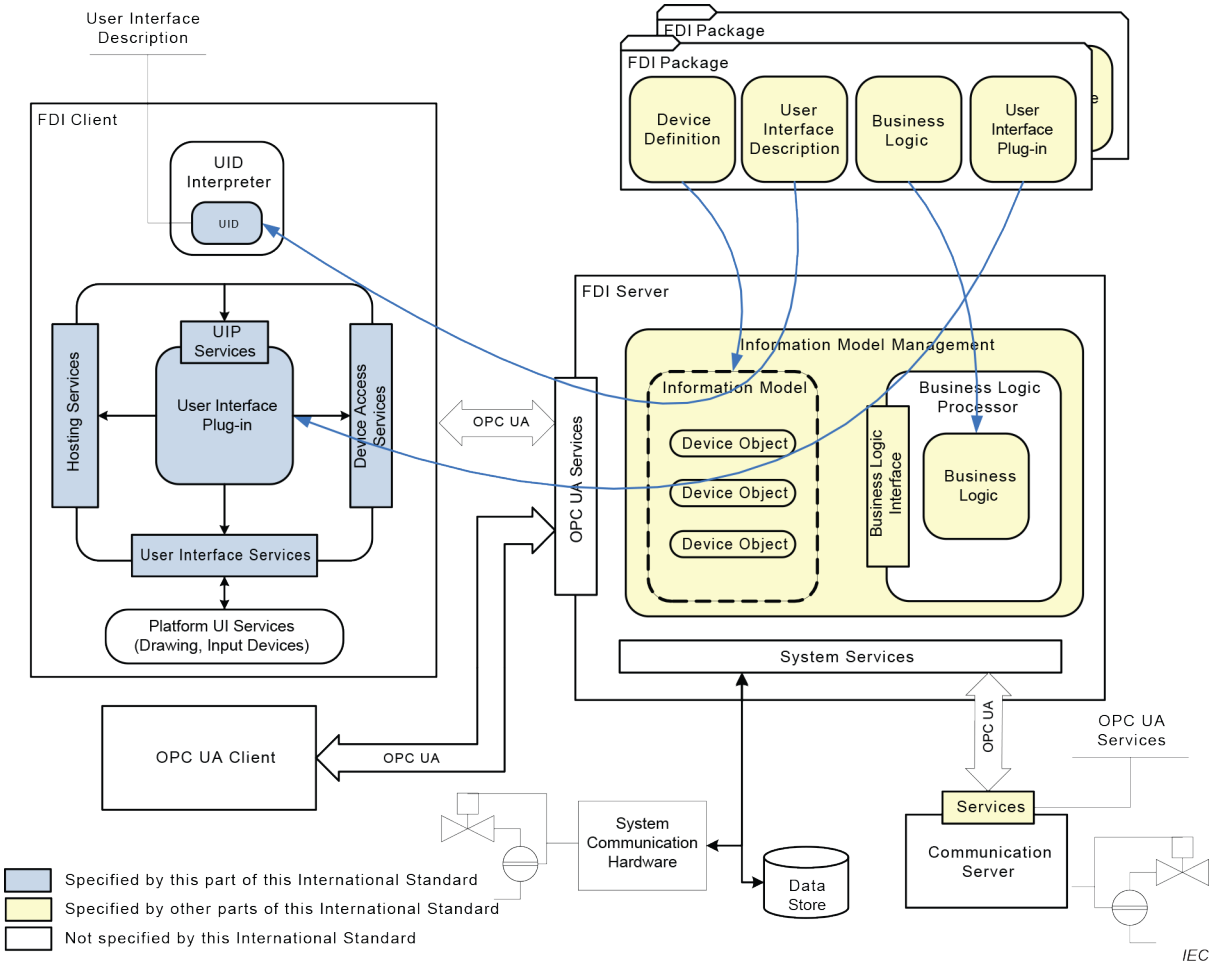

Figure 1 – FDI architecture diagram

2 Normative references

The following documents are referred to in the text in such a way that some or all of their content constitutes requirements of this document. For dated references, only the edition cited applies. For undated references, the latest edition of the referenced document (including any amendments) applies.

IEC 62443-3-3:2013, *Industrial communication networks – Network and system security – Part 3-3: System security requirements and security levels*

AVA Documents Document Sharing Hub

Full document details: IEC 62769-2 2021 RLV

IEC 62769-1, *Field Device Integration (FDI) – Part 1: Overview*

~~NOTE IEC 62769-1 is technically identical to FDI-2021~~

IEC 62769-3, *Field Device Integration (FDI) – Part 3: FDI Server*

~~NOTE IEC 62769-3 is technically identical to FDI-2023.~~

IEC 62769-4~~:2015~~, *Field Device Integration (FDI) – Part 4: FDI Packages*

~~NOTE IEC 62769-4 is technically identical to FDI-2024.~~

IEC 62769-5, *Field Device Integration (FDI) – Part 5: FDI Information Model*

~~NOTE IEC 62769-5 is technically identical to FDI-2025.~~

IEC 62769-6~~:2015~~, *Field Device Integration (FDI) – Part 6: FDI Technology Mapping*

~~NOTE IEC 62769-6 is technically identical to FDI-2026.~~

IEC 62541-3, *OPC Unified Architecture – Part 3: Address Space Model*

IEC 62541-4, *OPC Unified Architecture – Part 4: Services*

ISO/IEC 15948, *Information technology – Computer graphics and image processing – Portable Network Graphics (PNG): Functional specification*

ISO 639, *Codes for the representation of names of languages*

ISO 3166, *Codes for the representation of names of countries and their subdivisions*

~~ISO/IEC 10918-1, *Information technology – Digital compression and coding of continuous-tone still images: Requirements and guidelines*~~

~~IEEE 754, *IEEE Standard for Floating-Point Arithmetic*~~

~~IETF RFC 2083, *PNG (Portable Network Graphics) Specification Version 1.0*~~

IETF RFC 3066, *Tags for the Identification of Languages*

XMLSchema-1, *XML Schema: Structures* (available at http://www.w3.org/TR/xmlschema-1/)

XMLSchema-2, *XML Schema: Datatypes* (available at http://www.w3.org/TR/xmlschema-2/)

3 Terms, definitions, abbreviated terms~~, acronyms~~ and conventions

For the purposes of this document, the following terms and definitions apply.

ISO and IEC maintain terminological databases for use in standardization at the following addresses:

- IEC Electropedia: available at http://www.electropedia.org/
- ISO Online browsing platform: available at http://www.iso.org/obp

Documents
Document Sharing Hub

Full document details: IEC 62769-2 2021 RLV

3.1 Terms and definitions

For the purposes of this document, the terms and definitions given in IEC 62769-1 as well as the following apply.

3.1.1 Terms used for Services

3.1.1.1
Locking Services
set of Services through which access to a Device is controlled

3.1.1.2
Device Model Services
sub-set of the Device Access Services through which a UIP can access the information of a Device

3.1.1.3
Direct Access Services
sub-set of the Device Access Services through which a UIP can directly access a Device

3.1.2 Terms used for Device Access Services

3.1.2.1
Attribute
information element of a Node

Note 1 to entry: Some Attributes exist for all NodeClasses and some are specific to a given NodeClass.

Note 2 to entry: Supersedes the definition given in IEC 62769-1.

3.1.2.2
Device Model
hierarchy of Nodes that represents an existing Device

3.1.2.3
Node
element in the Device Model that can be addressed via the Device Access Services

Note 1 to entry: Supersedes the definition given in IEC 62769-1.

3.1.2.4
NodeClass
either an Object or a Variable

Note 1 to entry: Supersedes the definition given in IEC 62769-1.

3.1.2.5
Object
instance of the Object NodeClass

Note 1 to entry: Supersedes the definition given in IEC 62769-1.

3.1.2.6
Variable
instance of the Variable NodeClass

Note 1 to entry: Supersedes the definition given in IEC 62769-1.

Documents
Document Sharing Hub
Full document details: IEC 62769-2 2021 RLV

3.2 Abbreviated terms ~~and acronyms~~

For the purposes of this document, the abbreviated terms and ~~acronyms~~ initialisms given in IEC 62769-1 and the following apply.

UTC	Coordinated Universal Time
XML	Extended mark-up language

3.3 Conventions

Conventions for service definitions are identical to those in IEC 62541-4.

Basic data types used are defined in IEC 62541-3.

"Parameter" is always an Information Model Parameter. "parameter" is the general use of the word. If ambiguous, additional context is given.

4 Overview

An FDI Package provides the necessary information for a Device Type to allow managing the Device within the system. It is provided by a device vendor and deployed in an FDI Server. It may contain two types of user interface components that are available to the FDI Client for display to a user. An FDI Package may contain only one type or both types. The two types are referred to as User Interface Plug-ins and User Interface Descriptions.

A User Interface Plug-in (UIP) is an executable element. A UIP is provided by an FDI Package and transferred to the FDI Client by the FDI Server. A UIP provides a set of UIP Services that the FDI Client uses to initialize and interact with the UIP.

NOTE 1 IEC 62769-6 defines application programming interfaces for the services described in this document.

User Interface Descriptions (UIDs) are defined using EDDL. A UID is provided to the FDI Client by the FDI Server. The FDI Client uses the UID Interpreter to interpret and execute the UID. A UID may make use of other UID and UIP components as subcomponents in order to provide a modular approach and make the best use of both descriptive and executable user interface elements.

NOTE 2 UIPs can make use of other UIPs but not of other UIDs.

The FDI Server makes UIDs and UIPs available to the FDI Client via the Information Model. The Information Model organizes the UIDs and UIPs by Device Type.

The FDI Client provides the execution environment for UIPs. The FDI Client loads the UIP from the FDI Server.

The FDI Client's UIP execution environment consists of the following sets of services that are made available to the UIP:

- Device Access Services
- Hosting Services
- User Interface Services
- Printing Services (if available in the hosting environment)

NOTE 3 It is implementation-specific whether different UIPs get the same or different interface instances to access these services. The only requirement is that there is no side-effect if two UIPs use the same instance of an interface.

AVA Documents
Document Sharing Hub

Full document details: IEC 62769-2 2021 RLV

Similar to the FDI Client, each UIP shall also provide a set of services (UIP Services) by which the FDI Client activates, controls and shuts down UIPs (see 6.1).

The Device Access Services enable interaction between the UIP and the FDI Server-maintained Information Model. The FDI Client takes care of the interaction with the FDI Server freeing the UIP to focus on the application level only.

UIP access to the Information Model (IM) via the Device Access Services is restricted to the Device and its sub-devices.

The Hosting Services are provided by the FDI Client for use by the UIP. The Hosting Services include services related to the FDI Client allowing the UIP to acquire information about the environment.

The User Interface Services provide the means by which the UIP accesses the user interface services of the underlying operating system. These services provide access to the screen, keyboard, mouse, and other operating system resources. The User Interface Services are defined by the chosen implementation technology and therefore no additional definitions are included in this document (see IEC 62769-6). UIPs shall use the Hosting Services to display message boxes or progress bars and shall never use comparable services provided by the underlying operating system.

There are no printing services provided by the Client. If a UIP needs to generate a printout, it accesses the printing services of the underlying operating system. No additional definitions are included in this document.

The FDI Client uses the culture setting of the currently signed-in user for the execution environment of the UIP. It uses the culture when creating OPC UA Sessions and it sets the culture for each thread it creates. UIPs shall take care for culture setting in all threads that they create.

The FDI Client provides a UID Interpreter that is used to interpret and execute UIDs. The UID XML Schema is defined in this document (see Annex A).

Business Logic is executed in the FDI Server. Some Business Logic may be exposed to the FDI Client as Actions (see Clause 7) and can be triggered by FDI Clients.

Some typical FDI Client uses cases are described in Annex C.

5 FDI Client

5.1 Device Access Services

5.1.1 General

The Device Access Services provide access to both the online and offline information of a Device or its components as defined by the FDI Package, in particular for

- browsing the Device Model,
- reading/writing of data and subscribing to data changes,
- controlling access to the Device, and
- directly communicating with the Device.

The scope for the Device Access Services will be a Device, Block, or Communication Server to which the UIP is assigned. The FDI Client is expected to map the Device Access Services to OPC UA services provided by the FDI Server.

AVA Documents Document Sharing Hub

Full document details: IEC 62769-2 2021 RLV

The main Services are the Device Model Services to view and access Parameters. The Locking Services are used to control simultaneous access to a Device. The Direct Access Services allow a UIP to communicate with the Device.

Whether and how the different services are mapped to real interfaces is defined in IEC 62769-6. IEC 62769-6 also specifies how interfaces are obtained.

5.1.2 Device Model

The Device Model defines the structure of all data that are available to a UIP. It is confined to a single device instance. The entities in the structure (Parameters, Images, and Documents) are built from FDI Package information. User interface elements, like Menus, Graphs, Waveforms, are not part of the UIP Device Model.

All Device elements are organized as a defined hierarchy. The root of the hierarchy can be either a Device or a Block subject to where (by which MENU) the UIP is referenced in the User Interface Description of the FDI Package (see IEC 62769-4). The Nodes in the hierarchy are either Objects or Variables, where the main difference is that Variables provide a Value. Figure 2 illustrates the overall structure of a Device.

Figure 3 shows the structure of a block in more detail. The elements that will really be available depend on the contents of the respective FDI Package. Regular rectangles represent Object Nodes while the ones with rounded corners represent Variable Nodes. These NodeClasses are defined in 5.1.3. The top left Node is the root Node. The single hashed lines define the parent-child relationship in the hierarchy. As an example, the children of Device1 in Figure 2 are ParameterSet, ImageSet, Documentation, Blocks and SubDevices. The children of /SubDevices/Device_1b/ImageSet are Image_1 and Image_2.

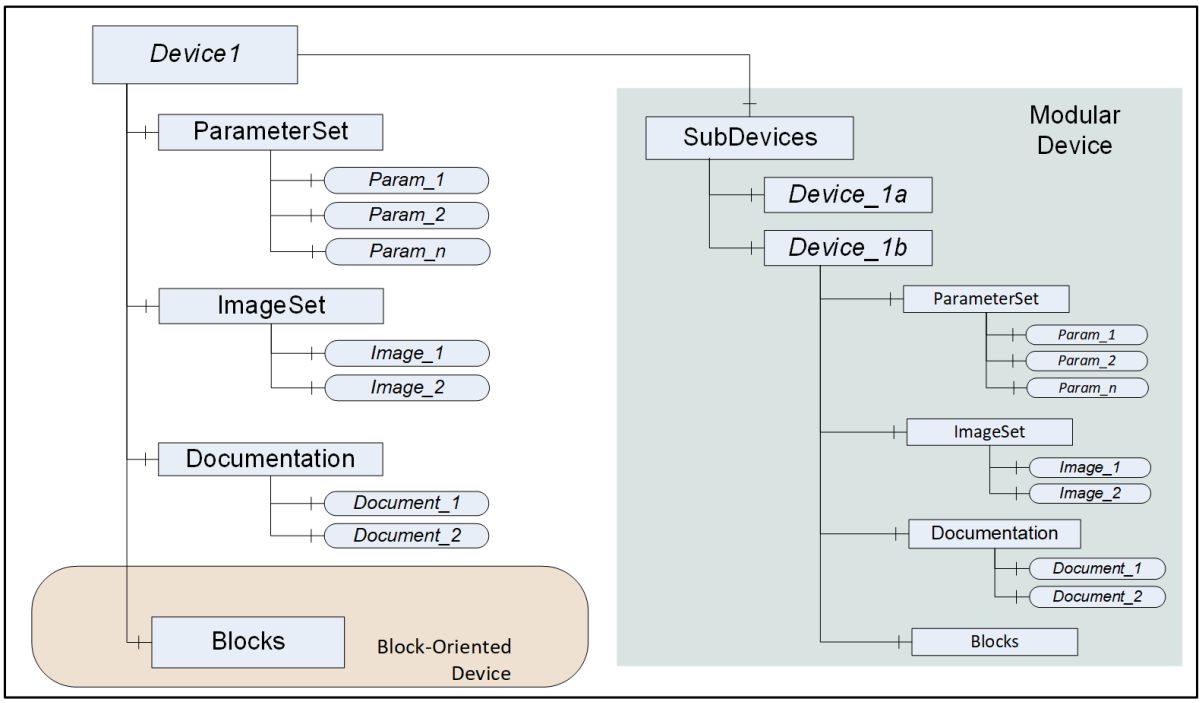

Figure 2 – Overall structure of a Device

Names that are in normal font are defined by the Device Access Services; names in italics are just placeholders for the real names as defined in the FDI Package.

Documents
Document Sharing Hub
Full document details: IEC 62769-2 2021 RLV

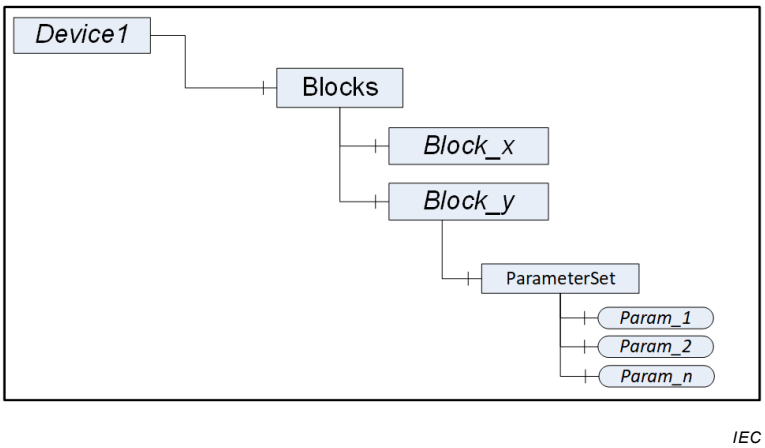

Figure 3 – Structure of Blocks

Each Node in the hierarchy is uniquely qualified with its pathname. This pathname is a concatenation of the individual Node Name Attributes. The separator is "/".

EXAMPLE The following examples illustrate qualified pathnames:

/		-- the root Node (here "Device1")
/	ParameterSet/Param_2	-- a Variable Node
/	SubDevices/Device_1b/ImageSet/Image_1	-- a picture

Certain Variables in the FDI Package may be tagged as "private", meaning they are non-browsable. Though they are non-browsable, they exist in the Device Model and can be addressed with their pathname.

5.1.3 Node model

5.1.3.1 General

The information of a Device is organized as a hierarchy of Nodes. Each Node is either an Object or a Variable. Both Object and Variable are derived from the BaseNodeClass, as illustrated in Figure 4.

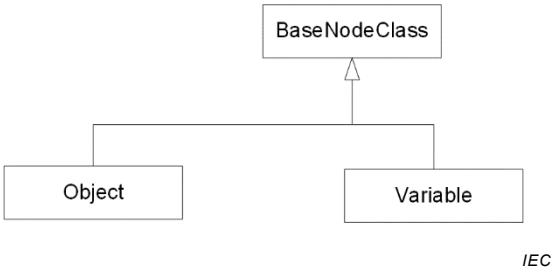

Figure 4 – Device Model NodeClasses

5.1.3.2 BaseNodeClass

This is the abstract parent NodeClass for Object and Variable Nodes. The BaseNodeClass Attributes are shown in Table 1. The Attributes of this NodeClass are available in both Object and Variable NodeClasses.

Documents
Document Sharing Hub
Full document details: IEC 62769-2 2021 RLV

Table 1 – BaseNodeClass Attributes

Attribute	Datatype	Description
NodePath	String	Qualified path of the Node in the Device Model. This Attribute is returned by the Browse Service and cannot be read or written.
Name	String	Name of Node according to device-specific documentation.
Label	LocalizedText	Human-readable label of the Node.
Description (optional)	LocalizedText	Human-readable help string describing the Node.

Additional Attributes will be available for derived NodeClasses. For example, a Variable will have Attributes that define the DataType and the AccessRights.

5.1.3.3 Object NodeClass

Table 2 contains the list of Attributes for Objects beyond those inherited from the BaseNodeClass.

Table 2 – Object NodeClass Attributes

Attribute	Datatype	Description
LockedStatus	Boolean	This Attribute when "true" indicates that this Object is currently locked. Bad_AttributeInvalid defines that locking is not supported for this Object at all.

5.1.3.4 Variable NodeClass

5.1.3.4.1 General

Variables are used to represent Parameters, images and documents. When reading Variables that represent images or documents, the system will provide them as a ByteString. For documents, the Name Attribute will consist of the filename including the extension that can be used to identify the document type. FDI supports ".pdf" and ".txt". For the representation of images, see 5.1.3.4.2.

Table 3 contains the list of Attributes for Variables beyond those inherited from the BaseNodeClass.

Documents
Document Sharing Hub
Full document details: IEC 62769-2 2021 RLV

Table 3 – Variable NodeClass Attributes

Attribute	Datatype	Description
Value	Variant	The value of the Variable as returned from the device (i.e. without applying the ScalingFactor). The Variant is specified in 5.1.9.4.
DataType	UInt32	The DataType Attribute specifies the data type of the Value Attribute. One of the data types specified in 5.1.9. IEC 62769-6 specifies the assignment of unique identifiers to each type.
ValueRank	Int32	Indicates whether the Value Attribute is an array. It may have the following values: >1 (MoreDimensions) – the value is an array with the specified number of dimensions. 1 (OneDimension) – the value is an array with one dimension. 0 (OneOrMoreDimensions) – the value is an array with one or more dimensions. -1 (Scalar) – the value is not an array. -2 (Any) – the value can be a scalar or an array with any number of dimensions. -3 (ScalarOrOneDimension) – the value can be a scalar or a one-dimensional array.
ArrayDimensions (optional)	UInt32[]	Specifies the length of each dimension for an array value. The Attribute is intended to describe the capability of the Variable, not the current size. The number of elements shall be equal to the value of the ValueRank Attribute. Shall be null if ValueRank <= 0. A value of 0 for an individual dimension indicates that the dimension has a Variable length. For example, if a Variable is defined by the following C array: Int32 myArray[346]; then this Variable's DataType would point to an Int32, the Variable's ValueRank has the value 1 and the ArrayDimensions is an array with one entry having the value 346.
AccessRights	Byte	The access rights for the Value. An enumeration with one of the following values: NONE_0 The Variable value cannot be accessed READ_1 The value of the Variable may be read WRITE_2 The value of the Variable may be written READORWRITE_3 The value of the Variable may be read or written
UserAccessRights	Byte	This Attribute specifies the access rights to the Value for the currently authenticated user. They may be less than the potential access rights. The same enumeration as for AccessRights is used.
ScalingFactor (optional)	Double	This Attribute specifies a suggested scaling factor. Note that the Value Attribute contains the raw value returned from the device. It is assumed, that the (raw) value is multiplied by this factor before being displayed.
EngineeringUnits (optional)	EUInformation	EngineeringUnits specifies the units for the value (e.g. °C, hertz, seconds). See 5.1.9.3.8 for the definition of the EUInformation data type.
Attributes for analog Variables (Variables that represent continuously variable physical quantities (e.g. pressure, temperature)).		

Documents
Document Sharing Hub
Full document details: IEC 62769-2 2021 RLV

Attribute	Datatype	Description
EURange (optional)	Range[]	Defines one or more value ranges likely to be obtained in normal operation. They are intended for such use as automatically scaling a bar graph display. Sensor or instrument failure or deactivation can result in a returned item value that is actually outside this range. UIP software shall be prepared to deal with this. See 5.1.9.3.7 for the definition of the Range data type. Ranges may change during operation, for example by changing the operation mode of an instrument. Like the Value itself, Ranges are always unscaled (i.e. without applying the ScalingFactor).
Attributes for discrete (enumerated) Variables (for data that may take on only a certain number of possible values (e.g. OPENING, OPEN, CLOSING, CLOSED).		
CurrentLabel	String	Enumerated Variables expose the current numeric state in their Value Attribute.The CurrentLabel Attribute provides the name of the current enumeration value.
EnumValues	EnumValuesType[]	EnumValues is an array of {StateValue, Enumeration Name, and Help Information}. See 5.1.9.3.9 for the definition of this type. FDI Clients/UIPs may read this Attribute in advance and store it for lookup of name or help when they receive the numeric representation.
Attributes for bit-enumerated Variables (for data that represent a bit mask).		
OptionNames	String[]	Bit-enumerated Variables transmit a bit mask encoded in an unsigned integer of a length that is sufficient to represent all bits. The OptionNames Attribute provides a human-readable representation for each valid bit of the bit mask. The order of the bits of the bit mask points to a position of the array of Strings in the OptionNames Attribute, i.e. the first bit points to the first entry in the array, and so on. The array contains an empty String for each bit that has no specific meaning.

5.1.3.4.2 Representation of images

All images have the DataType and are transferred as a ByteString. FDI supports three image formats. To identify the format of the image provided in the ByteString, the initial bytes have to be parsed as outlined in ~~the following table~~ Table 4.

Documents
Document Sharing Hub

Full document details: IEC 62769-2 2021 RLV

Table 4 – Parsing of the initial bytes

<table>
<tr><th>Image type</th><th>Description</th></tr>
<tr><td>GIF</td><td>Defines an image in GIF (Graphics Interchange Format). GIF is specified in http://www.w3.org/Graphics/GIF/spec-gif89a.txt . The first bytes of a GIF image are as follows:
<table>
<tr><td>Byte</td><td>1</td><td>2</td><td>3</td></tr>
<tr><td>Hex</td><td>47</td><td>49</td><td>46</td></tr>
</table></td></tr>
<tr><td>JPG</td><td>Defines an image in JPG (Joint Photographic Experts Group File Interchange Format). JPG is defined in ISO/IEC 10918-1. The first bytes of a JPG image are as follows:
<table>
<tr><td>Byte</td><td>1</td><td>2</td><td>3</td><td>4</td></tr>
<tr><td>Hex</td><td>FF</td><td>D8</td><td>FF</td><td>E0</td></tr>
</table></td></tr>
<tr><td>PNG</td><td>Defines an image in PNG (Portable Network Graphics format). PNG is defined in IETF RFC 2083 and ISO/IEC 15948. The first bytes of a PNG image are as follows:
<table>
<tr><td>Byte</td><td>1</td><td>2</td><td>3</td><td>4</td><td>5</td><td>6</td><td>7</td><td>8</td></tr>
<tr><td>Hex</td><td>89</td><td>50</td><td>4E</td><td>47</td><td>0D</td><td>0A</td><td>1A</td><td>0A</td></tr>
</table></td></tr>
</table>

5.1.3.4.3 Representation of records

A Variable hierarchy is used to represent EDDL RECORD Parameters. The root Variable represents the record itself. It will have component Variables that represent the EDDL RECORD MEMBERS (the MEMBERS of an EDDL RECORD are defined in EDDL by means of a reference to an EDDL VARIABLE.).

An example of how a record is represented in the Device Model is shown in Figure 5.

Documents
Document Sharing Hub
Full document details: IEC 62769-2 2021 RLV

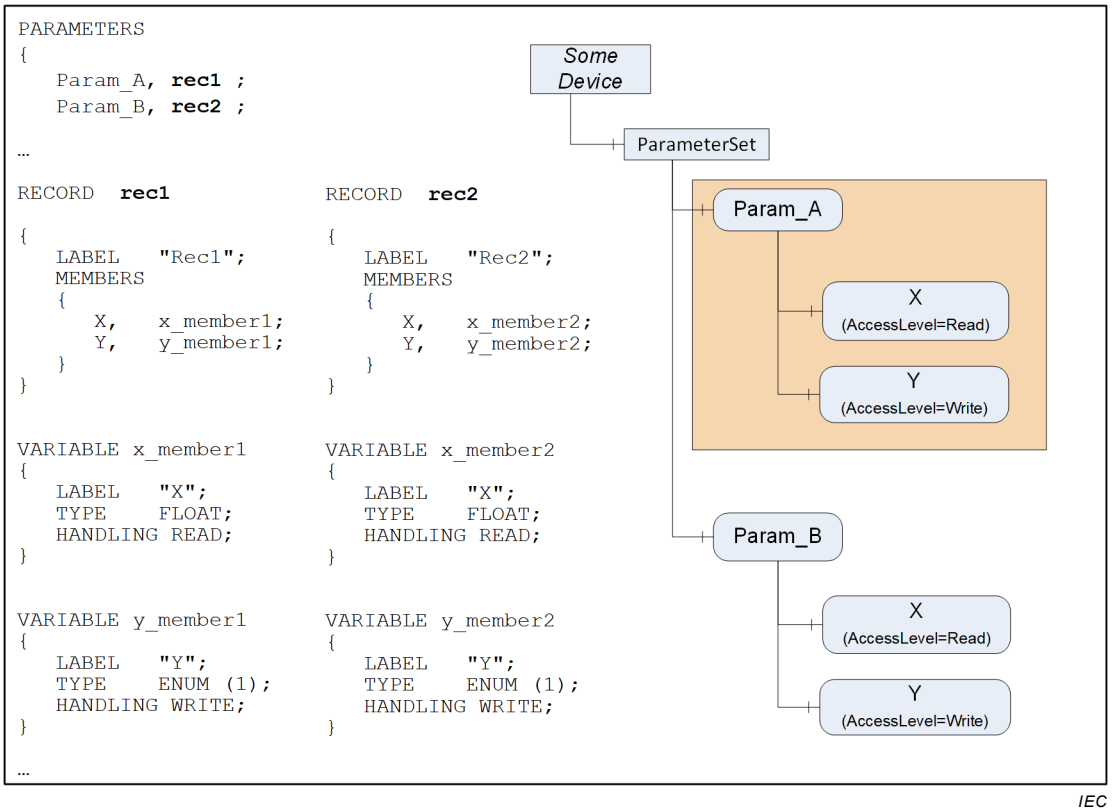

Figure 5 – Example: Variable hierarchy representing a RECORD

The Name and Label Attributes of the root Variable are set to the name of the RECORD and the LABEL Attribute, respectively. The DataType Attribute of the "root" Variable is Variant. The ValueRank Attribute is used to specify that the Value contains an array. The Value Attribute represents the values of all members in the order as defined for the RECORD. According to the example in Figure 5, the first variant will be a FLOAT and the second will be an ENUM.

For each component Variable that represents an EDDL RECORD MEMBER:

- the Name Attribute is set to the identifier of the corresponding EDDL VARIABLE,
- the Label is the LABEL Attribute of the corresponding EDDL VARIABLE,
- the Description is the HELP Attribute of the corresponding EDDL VARIABLE, and
- the AccessRights Attribute is derived from the EDDL HANDLING Attribute.

Each member of the record can be accessed with its pathname as specified above. Browsing can also be used.

EXAMPLE Example of a pathname: /ParameterSet/Param_A/X.

5.1.3.4.4 Representation of arrays, and lists of members with simple data types

A single Variable will represent an EDDL VALUE_ARRAY or LIST item when the data type of the referenced array element has a simple data type.

The DataType Attribute is set to one of the base data types (see 5.1.9.2).

Documents
Document Sharing Hub
Full document details: IEC 62769-2 2021 RLV

The ValueRank Attribute is used to specify that the Value contains an array. In case of an EDDL VALUE_ARRAY the number of elements is exposed via the ArrayDimensions Attribute. In the case of an EDDL LIST, the number of elements is unspecified since the size can change dynamically.

5.1.3.4.5 Representation of arrays, and lists of RECORDs

Value arrays or lists of non-simple EDDL Parameters will be represented as an array of Variable hierarchies. Figure 6 shows the EDDL sample code of a VALUE_ARRAY of RECORDs and the corresponding Variable hierarchy.

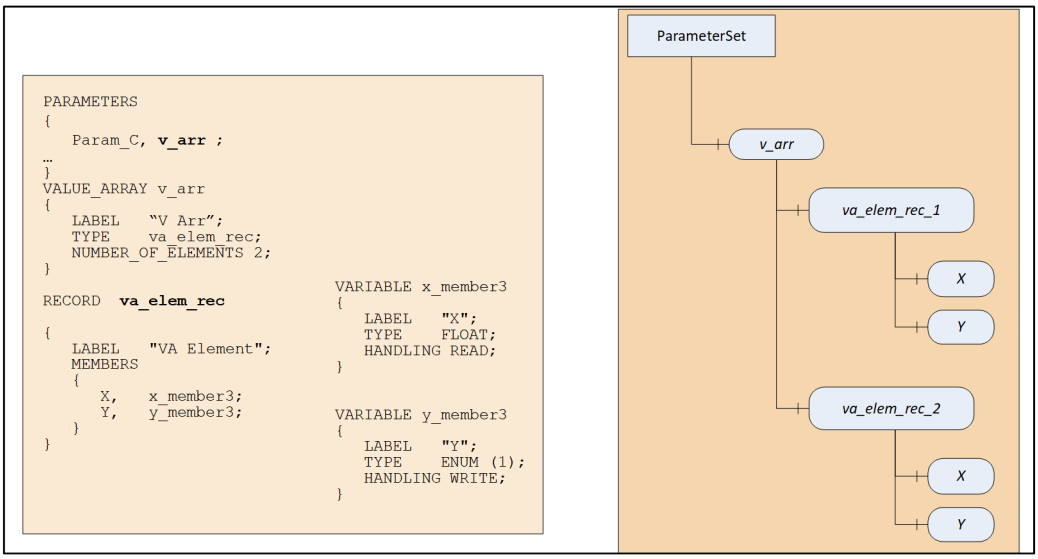

IEC

Figure 6 – Variable hierarchy representing a VALUE_ARRAY of RECORDs

The Name and Label Attributes of the root Variable are set to the name of the ARRAY and the LABEL Attribute, respectively. The DataType Attribute of the "root" DataVariable is Variant. The ValueRank Attribute is used to specify that the Value contains an array. The Value Attribute represents all VALUE_ARRAY entries. The first Variant corresponds to the first array entry and so on. Each Variant in turn contains an array. This may either be an array of simple types or an array of Variants. A RECORD is always represented as an array of Variant.

The VALUE_ARRAY element, which is in fact a RECORD, is represented as a component Variable hierarchy. The Name and Label Attributes of each root Variable representing a RECORD are set to the name of the RECORD and the LABEL Attribute, respectively. The array index (_1, _2) is appended to allow unique identification. Note that the index always begins with '1'.

The RECORD MEMBERS are also represented as component Variables as specified in 5.1.3.4.3.

Members of each record can be accessed with a pathname. Browsing can also be used.

EXAMPLE Example of a pathname: /ParameterSet/v_arr/va_elem_rec_2/Y.

Documents
Document Sharing Hub
Full document details: IEC 62769-2 2021 RLV

5.1.4 Services

5.1.4.1 General

All Services specified in this part of IEC 62769 rely on the conventions defined in 5.1.4.2. They are specified in an abstract manner with request and response parameters in a single table.

Programmatic access to the services may be synchronous or asynchronous (see IEC 62769-6). However, asynchronicity exists to maintain responsiveness of the User Interface. Service execution shall always be assumed to be sequential.

5.1.4.2 Conventions for service definitions

The service specifications use tables to describe service parameters, as shown in Table 5. Parameters are organised in this table into request parameters and response parameters.

Table 5 – Service Definition Table

Name	Type	Description
Request		Defines the request parameters of the service
simple Parameter Name		Description of this parameter
constructed Parameter Name	structure	Description of the constructed parameter
component Parameter Name		Description of the component parameter
Response		Defines the response parameters of the service

The Name, Type and Description columns contain the name, data type and description of each parameter. All parameters are mandatory, although some may be unused under certain circumstances. The description column specifies the value to be supplied when a parameter is unused. Parameter names always begin with a lower-case character. This allows differentiating if name and type are the same, for example, name = "nodeId", type = "NodeId".

Two types of parameters are defined in these tables, simple and constructed. Simple parameters have a simple data type, such as Boolean or String.

Constructed parameters are composed of two or more component parameters, which can be simple or constructed. Component parameter names are indented below the constructed parameter name.

The data types used in these tables may be base types or service-specific types. Base data types are listed in 5.1.9. Data types that are service-specific are defined in the parameter table of the service.

5.1.4.3 Auditing

Auditing is a requirement in many systems. It provides a means for tracking activities that occur as part of normal operation of the system. It also provides a means for tracking abnormal behavior. It is also a requirement from a security standpoint.

When an audit trail is maintained by the system, audit trail records for the Write Service invoked by the UIP will be implicitly created by the system.

Documents
Document Sharing Hub
Full document details: IEC 62769-2 2021 RLV

In addition, UIPs have means for providing additional audit context information for things that the system cannot know:

- They can call the LogAuditTrailMessage service (see 5.2.2.5). This shall be executed in particular when the DirectAccess Services are used. The UIP shall include sufficient information in the message for precise description of the activity performed.
- They can provide a context text when using the Locking Services (see 5.1.7) or the Direct Access Services (see 5.1.8).

5.1.4.4 Services and operations

Several of the Device Model Services (e.g. Read and Write) allow specifying an array of elements that shall be processed. The processing of each individual element is called an "operation". This is an important differentiation for error handling as a service execution is considered successful even if individual operations fail. The following list explains the differences between the service and operation result codes.

- Service result code

  If a service succeeds, the result code is "Good" and the response parameters are valid. If it fails, the service result code is any of the "Bad_..." service failure codes defined in 5.1.4.6. In such a case, an InnerErrorInfo (see 5.1.9.3.4) may be provided as well. Programmatic access to service failure codes is specific to the technology and may be based on exceptions (see IEC 62769-6).
- Operation result code

  The result code for each operation is returned as part of the service-specific response parameters (see 5.1.4.7 for the list of available operation result codes).

Operations can return an InnerErrorInfo with each result code other than "Good" if returnInnerErrorInfo="true" in the service request.

5.1.4.5 StatusCode

The StatusCode used for service results or operational results reports the outcome of an operation. It is a 32-bit unsigned integer. The top 16 bits represent the numeric value of the code that shall be used for detecting specific errors or conditions. The bottom 16 bits are bit flags that contain additional information but do not affect the meaning of the StatusCode.

UIPs shall always check the StatusCode associated with a result before using it. Results that have an uncertain/warning status associated with them shall be used with care since these results might not be valid in all situations. Results with a bad/failed status shall never be used.

The exact bit assignments are shown in Table 6. IEC 62769-6 provides functions to help in evaluation of the StatusCode.

Documents
Document Sharing Hub

Full document details: IEC 62769-2 2021 RLV

Table 6 – StatusCode Bit Assignments

Field	Bit Range	Description
Severity	30 .. 31	Indicates whether the StatusCode represents a good, bad or uncertain condition. These bits have the following meanings: **Severity** / **Bits** / **Description** Good Success / 00 / The operation was successful; results may be used. Uncertain Warning / 01 / The operation was partially successful; results might not be suitable for some purposes. Bad Failure / 10 / The operation failed and any associated results cannot be used. Reserved / 11 / Reserved for future use. Should also be treated as "Bad".
Reserved	29 .. 28	Reserved for future use. Shall always be zero.
SubCode	16 .. 27	The code is a numeric value assigned to represent different conditions. Each code has a symbolic name and a numeric value. All descriptions in this specification refer to the symbolic name. IEC 62769-6 maps the symbolic names onto a numeric value.
Reserved	12 .. 15	Reserved for future use. Shall always be zero.
InfoType	10 .. 11	The type of information contained in the info bits. These bits have the following meanings: **InfoType** / **Bits** / **Description** NotUsed / 00 / The info bits are not used and shall be set to zero. DataValue / 01 / The StatusCode and its info bits are associated with a data value returned from the FDI Server. Reserved / 1X / Reserved for future use. The info bits shall be ignored.
InfoBits	0 .. 9	Additional information bits that depend on the Info Type field.

Table 7 describes the structure of the InfoBits when the Info Type is set to DataValue (01).

Table 7 – DataValue InfoBits

Info Type	Bit Range	Description
LimitBits	8 .. 9	The limit bits associated with the data value. The limits bits have the following meanings: **Limit** / **Bits** / **Description** None / 00 / The value is free to change. Low / 01 / The value is at the lower limit for the data source. High / 10 / The value is at the higher limit for the data source. Constant / 11 / The value is constant and cannot change.
Overflow	7	If this bit is set, not every detected change has been returned since the FDI Server's queue buffer for the subscribed Variable reached its limit and had to purge out data.
Reserved	0 .. 6	Reserved for future use. Shall always be zero.

5.1.4.6 Service failure codes

Table 8 defines result codes for the services. The column Service in Table 8 lists which code may be returned by which service. Result codes that are specific to an individual service are also specified with the service.

Documents
Document Sharing Hub

Full document details: IEC 62769-2 2021 RLV

Table 8 – Service result codes

Exception name code	Description	Service
Bad_AlreadyLocked	The Node is already locked by another FDI Client.	InitLock
Bad_LockRequired	The passed Node is not yet locked.	Write, DirectAccess
Bad_MaxAgeInvalid	The max age parameter is invalid.	Read
Bad_NodeInvalid	The identifier does not refer to a valid Node in the Device Model. This result code is used both as service- and as operation-level result code.	Browse, InitLock, ExitLock
Bad_NothingToDo	There was nothing to do because the caller passed an empty list of operations.	Read, Write, Subscribe, Unsubscribe
Bad_NotSupported	The Service is not supported for the specified Node or for the Device/Block in general.	Locking, DirectAccess
Bad_RequestCancelled	The request was cancelled by Client / UIP.	All
Bad_SubscriptionIdInvalid	The subscription id is not valid.	Subscribe, Unsubscribe, DeleteSubscription
Bad_Timeout	The operation timed out.	All
Bad_TooManySubscriptions	The FDI Server has reached its maximum number of subscriptions.	CreateSubscription
Bad_InvalidState	The specified Node is in a state that does not permit this operation.	Services for Locking
Bad_TooManyOperations	The request could not be processed because it specified too many operations.	Read, Write, Subscribe
Bad_UnexpectedError	An unexpected error occurred.	All

5.1.4.7 Operational status codes

Table 9 defines the status codes for all operation level results (for services that have individual operations such as Read, Write or Subscribe). Each service defines the applicable subset and instead of a description will contain references to this table.

NOTE The value in Table 9 is referring to the Parameter value, not to the communication quality.

Table 9 – Operation level result codes

Operation Level Result Code	Description
Good	The operation completed successfully.
Good_LocalOverride	The value has been overridden.
Good_PostActionFailed	The value of a Variable was successfully read or written but one of the post actions failed.
Good_Edited	The Value has been modified in the EditContext and is not yet in the Device.
Good_DependentValueChanged	The Value of a dependent Variable was changed but not yet applied.
Uncertain	The operation completed however its outputs may not be usable.
Uncertain_NoCommunicationLastValue	Communication to the data source has failed. The Variable value is the last value that had a good quality.
Uncertain_LastUsableValue	Whatever was updating this value will no longer be doing so.
Uncertain_SubstituteValue	The value is an operational value that was manually overwritten.
Uncertain_InitialValue	The value is an initial value for a Variable that normally receives its value from another Variable.

Documents
Document Sharing Hub
Full document details: IEC 62769-2 2021 RLV

Operation Level Result Code	Description
Uncertain_SensorNotAccurate	The value is at one of the sensor limits.
Uncertain_EngineeringUnitsExceeded	The value is outside of the range of values defined for this parameter.
Uncertain_SubNormal	The value is derived from multiple sources and has less than the required number of good sources.
Uncertain_DominantValueChanged	A change of a dominant value – e.g. an engineering unit – made a dependent value invalid.
Bad	The operation failed.
Bad_AttributeInvalid	The attributeId is not supported for the specified Node.
Bad_ConfigurationError	There is a problem with the configuration that affects the usefulness of the value.
Bad_DeviceFailure	There has been a failure in the device/data source that generates the value.
Bad_IndexRangeInvalid	The indexRange parameter has an invalid syntax.
Bad_NodeInvalid	The identifier does not refer to a valid Node in the Device Model. This result code is used both as service- and as operation-level result code.
Bad_NotConnected	The Variable should receive its value from another Variable, but has never been configured to do so.
Bad_NotReadable	The access level does not allow reading or subscribing to the Node.
Bad_NotWritable	The access level does not allow writing to the Node.
Bad_OutOfRange	The value was out of range.
Bad_OutOfService	The source of the data is not operational.
Bad_SensorFailure	There has been a failure in the sensor from which the value is derived by the device/data source.
Bad_TypeMismatch	The value supplied is not of the same type as the Variable's value.
Bad_UIPHandleInvalid	The handle does not refer to a subscribed Node Attribute.
Bad_UserAccessDenied	User does not have permission to perform the requested operation.
Bad_WaitingForInitialData	Waiting for the FDI Server to obtain values from the underlying data source. After subscribing to Variables, it may take some time before values are delivered. In such cases an initial update may be sent with this status prior to the Notification with the first valid value.

5.1.5 Base Property Services

5.1.5.1 Overview

The Base Property Services provide access to basic Device Access properties.

5.1.5.2 Get DeviceAccess interface version

5.1.5.2.1 Description

This service returns the version of the interface that the UIP is using.

5.1.5.2.2 Parameters

Table 10 defines the parameters for the service.

Documents
Document Sharing Hub
Full document details: IEC 62769-2 2021 RLV

Table 10 – GetDeviceAccessInterfaceVersion Service parameters

Name	Type	Description
Request		
Response		
version	String	FDI Technology Version of the DeviceAccess interface. The format of the value is xx.yy.zz as defined in IEC 62769-4.

5.1.5.2.3 Service results

There are no service results other than the common codes specified in 5.1.4.6.

5.1.5.3 GetOnlineAccessAvailability

5.1.5.3.1 Description

This service returns a hint as to whether online access is available in principle. This is general information. It does not clarify whether online access to a specific device is possible.

5.1.5.3.2 Parameters

Table 11 defines the parameters for the service.

Table 11 – GetOnlineAccessAvailability Service parameters

Name	Type	Description
Request		
Response		
onlineAccess	Boolean	This value when "false" specifies that online access is not available. "true"indicates basic availability.

5.1.5.3.3 Service results

There are no service results other than the common codes specified in 5.1.4.6.

5.1.6 Device Model Services

5.1.6.1 Overview

The Device Model Services include:

- Browse
- Read
- Write
- Subscription
  - CreateSubscription
  - Subscribe
  - Unsubscribe
  - DeleteSubscription

Documents
Document Sharing Hub

Full document details: IEC 62769-2 2021 RLV

The services provide access to the offline representation and the online representation of the Device. The online Nodes for a Device are always present. However, access to data that require communication may be rejected with proper status codes such as Bad_NotConnected.

NOTE The online model does not contain SubDevices. If the UIP uses a path that includes SubDevices to access an online Node, this path will be evaluated in the offline hierarchy.

Cancel services are available for Browse, Read, and Write. The exact definition and mechanics depend on the technology used for the implementation of these services.

5.1.6.2 Browse

5.1.6.2.1 Description

Browses a single level in the hierarchy in the Device Model and returns Attributes for all children of the specified Node.

5.1.6.2.2 Parameters

Table 12 defines the parameters for the service.

Table 12 – Browse Service parameters

Name	Type	Description
Request		
nodeToBrowse	NodeSpecifier	The identifier of the Node to be browsed. See 5.1.9.3.2 for the definition of the NodeSpecifier type.
Response		
browseResult[]	structure	List of Nodes that are on the next level down in the hierarchy. For each Node the following Attributes will be returned.
nodePath	String	See BaseNodeClass in 5.1.3.2.
name	String	See BaseNodeClass in 5.1.3.2.
label	LocalizedText	See BaseNodeClass in 5.1.3.2.

5.1.6.2.3 Service results

No specific Service result codes are defined for Browse. Common StatusCodes are defined in Table 8.

5.1.6.3 CancelBrowse

5.1.6.3.1 Description

Calling CancelBrowse indicates that the UIP has no further interest in the results of this service. Execution will be stopped when possible.

Cancel is a suggestion to the system. ~~Due~~ Owing to asynchronous execution, the service may already be fully or partially completed.

5.1.6.3.2 Parameters

Table 13 defines the parameters for the service.

Documents
Document Sharing Hub

Full document details: IEC 62769-2 2021 RLV

Table 13 – CancelBrowse Service parameters

Name	Type	Description
Request		
serviceId	<technology dependent>	The identifier of the service to cancel.
Response		

5.1.6.3.3 Service results

No specific Service result codes are defined for CancelBrowse. Successfully cancelled Browse requests shall respond with Bad_RequestCancelled. Common StatusCodes are defined in Table 8.

5.1.6.4 Read

5.1.6.4.1 Description

This service is used to read Attributes of Object or Variable Nodes. UIPs that need to monitor Variable Attributes for changes shall use the Subscription services instead of Read.

5.1.6.4.2 Parameters

Table 14 defines the parameters for the service.

Documents
Document Sharing Hub

Full document details: IEC 62769-2 2021 RLV

Table 14 – Read Service parameters

Name	Type	Description
Request		
returnInnerErrorInfo	Boolean	A value of "true" requests error information from calls to an underlying system to be returned when available. "false" defines that this information shall not be returned.
attributesToRead[]	Structure	The Attributes to read.
node	NodeSpecifier	The identifier of the Node that contains the Attribute to read. See 5.1.9.3.2 for the definition of the NodeSpecifier type.
attributeId	AttributeId	Numeric identifier of the Attribute to Read. See 5.1.9.3.3.
indexRange	NumericRange	This parameter is used to identify a single element of an array, or a single range of indexes for arrays. If a range of elements is specified, the values are returned as a composite. The first element is identified by index 0 (zero). This parameter is ignored if the specified Attribute is not an array or a structure. However, if the specified Attribute is an array or a structure, and this parameter is null (Null or empty String), then all elements are to be included in the range. See 5.1.9.3.6 for a detailed definition.
maxAge	UInt32	Maximum age of the value to be read in milliseconds. If the FDI Server has a cached value no older than maxAge, it will return the cached value rather than requesting a new value from the device. If maxAge is set to 0, the FDI Server shall read a new value from the data source. Values greater than 2^{31} -1 (0x7fff ffff) are invalid for maxAge.
Response		
readResult []	DataValue	The StatusCode, Value and timestamps for each Node Attribute that was read. The order of this list matches the order of the attributesToRead request parameter. The DataValue is defined in 5.1.9.3.3.
innerErrorInfos []	InnerErrorInfo	List of error information from calls to an underlying system. See 5.1.9.3.4. Matches the size and order of the attributesToRead request parameter. This list is empty if inner error information was not requested or if no information was encountered in the processing of the request.

5.1.6.4.3 Service results

Table 15 defines values for the Service result code. Other common StatusCodes are defined in Table 8.

Table 15 – Read Service result codes

Result code	Description
Bad_MaxAgeInvalid	The max age parameter is invalid.

5.1.6.4.4 Operation result codes

Table 16 defines values for the operation status code contained in the DataValue of each readResult element. All operational status codes with their description are in Table 9.

Documents
Document Sharing Hub
Full document details: IEC 62769-2 2021 RLV

Table 16 – Read operation result codes

Result code
Good
Good_LocalOverride
Good_PostActionFailed
Good_DependentValueChanged
Uncertain
Uncertain_NoCommunicationLastValue
Uncertain_LastUsableValue
Uncertain_SubstituteValue
Uncertain_InitialValue
Uncertain_SensorNotAccurate
Uncertain_EngineeringUnitsExceeded
Uncertain_SubNormal
Uncertain_DominantValueChanged
Bad
Bad_UserAccessDenied
Bad_ConfigurationError
Bad_NotConnected
Bad_DeviceFailure
Bad_SensorFailure
Bad_OutOfRange
Bad_OutOfService
Bad_NodeInvalid
Bad_AttributeInvalid
Bad_IndexRangeInvalid
Bad_NotReadable

5.1.6.5 CancelRead

5.1.6.5.1 Description

Calling CancelRead indicates that the UIP has no further interest in the results of this service. Execution will be stopped when possible.

Cancel is a suggestion to the system. ~~Due~~ Owing to asynchronous execution, the service may already be fully or partially completed.

5.1.6.5.2 Parameters

Table 17 defines the parameters for the service.

Documents
Document Sharing Hub

Full document details: IEC 62769-2 2021 RLV

Table 17 – CancelRead Service parameters

Name	Type	Description
Request		
serviceId	<technology dependent>	The identifier of the service to cancel.
Response		

5.1.6.5.3 Service results

No specific Service result codes are defined for CancelRead. Successfully cancelled Read requests shall respond with Bad_RequestCancelled. Common StatusCodes are defined in Table 8.

5.1.6.6 Write

5.1.6.6.1 Description

This service is used to write values to one or more Variables. For array values, this service allows writing the entire array, writing individual elements or writing ranges of elements.

Explicit locking is required (see 5.1.7). If the Node is not locked, the request will be rejected with Bad_LockRequired.

The service response is not returned until the write operation has been executed by the system. Rollback is the responsibility of the FDI Client/UIP.

The values shall have the correct data type.

NOTE No automatic data type translation takes place (see Bad_TypeMismatch operation result code).

5.1.6.6.2 Parameters

Table 18 defines the parameters for the service.

Documents
Document Sharing Hub

Full document details: IEC 62769-2 2021 RLV

Table 18 – Write Service parameters

Name	Type	Description
Request		
returnInnerErrorInfo	Boolean	A value of "true" requests error information from calls to an underlying system to be returned when available. "false" defines that this information shall not be returned.
variablesToWrite[]	structure	List of Variables to write to. No assumptions should be made about the order of processing this list. If the order matters, separate service requests shall be used.
node	NodeSpecifier	The identifier of the Node that contains the Attribute to write. See 5.1.9.3.2 for the definition of the NodeSpecifier type.
indexRange	NumericRange	See 5.1.9.3.6 for a detailed definition.
value	Variant	Value to write.
Response		
writeResult[]	UInt32	Status codes for operation results as defined in Table 19. The order of this list matches the order of the variablesToWrite request parameter.
innerErrorInfos []	InnerErrorInfo	List of error information from calls to an underlying system. See 5.1.9.3.4. Matches the size and order of the variablesToWrite request parameter. This list is empty if inner error information was not requested or if no information was encountered in processing of the request.

5.1.6.6.3 Service results

There are no service results other than the common codes specified in 5.1.4.6.

5.1.6.6.4 Operation result codes

Table 19 defines values for the operation status code contained in the writeResult elements. All operational status codes with their description are in Table 9.

Table 19 – Write operation result codes

Result code
Good
Good_PostActionFailed
Bad
Bad_UserAccessDenied
Bad_NodeInvalid
Bad_IndexRangeInvalid
Bad_TypeMismatch
Bad_OutOfRange
Bad_NotWritable

Documents
Document Sharing Hub
Full document details: IEC 62769-2 2021 RLV

5.1.6.7 CancelWrite

5.1.6.7.1 Description

Calling CancelWrite indicates that the UIP has no further interest in the results of this service. Execution will be stopped when possible.

Cancel is a suggestion to the system. ~~Due~~ Owing to asynchronous execution, the service may already be fully or partially completed.

5.1.6.7.2 Parameters

Table 20 defines the parameters for the service.

Table 20 – CancelWrite Service parameters

Name	Type	Description
Request		
serviceId	<technology dependent>	The identifier of the service to cancel.
Response		

5.1.6.7.3 Service results

No specific Service result codes are defined for CancelWrite. Successfully cancelled Write requests shall respond with Bad_RequestCancelled. Common StatusCodes are defined in Table 8.

5.1.6.8 Subscriptions

5.1.6.8.1 Subscription mechanism

Subscriptions allow the UIP to receive unsolicited callbacks from the FDI Client when the subscribed Node Attributes change. Subscriptions are a more efficient way to get periodic updates of data than by issuing repeated calls to the Read service, i.e. polling. The UIP creates a subscription by calling the CreateSubscription service (see 5.1.6.8.2). When the CreateSubscription service is called the UIP shall supply a callback parameter with the UIP-specific DataChangeCallback service (see 5.1.6.8.6). After receiving the subscription identifier in the CreateSubscription response, the UIP shall add Node Attributes of interest to the Subscription by calling the Subscribe service.

Once the initial values have been reported, the DataChangeCallback service is only called when Node Attributes change and only the Node Attributes that have changed are reported to the callback. The UIP controls the maximum frequency at which the callback should be invoked by specifying a rate in milliseconds.

After Node Attributes have been subscribed, their values may not be immediately available and may become available at different times. As such, the initial callback may not include all of the subscribed Node Attributes. Furthermore, it is possible that the initial update for a subscribed Node Attribute will return a Bad or Uncertain StatusCode.

Additionally, the time span between when a change happens and when the callback is invoked depends on where the information to be changed is maintained. Some values are maintained by the system, which allows immediate notification; others are located in the physical device so that communication is required to access it.

Documents
Document Sharing Hub
Full document details: IEC 62769-2 2021 RLV

5.1.6.8.2 CreateSubscription Service

5.1.6.8.2.1 Description

This service is used to create a subscription.

5.1.6.8.2.2 Parameters

Table 21 defines the parameters for the service.

Table 21 – CreateSubscription Service parameters

Name	Type	Description
Request		
requestedUpdateRate	UInt32	The fastest rate, in milliseconds, at which the UIP requests to be called back with data changes, specified by the minimum milliseconds to elapse between updates. Regardless of the requested rate, a callback only occurs if data has changed. A rate of "0" indicates that the caller wants to be notified of changes as soon as possible. The service will return the fastest possible rate as revisedUpdateRate.
dataChangeCallback	DataChangeCallback	Callback for sending data change updates to the UIP. See 5.1.6.8.6. The DataChangeCallback is a service implemented and provided by the UIP.
Response		
revisedUpdateRate	UInt32	The actual rate that the FDI Server will use, expressed as the minimum milliseconds to elapse between updates (if data has changed since the previous update).
subscriptionId	SubscriptionId	The callee-assigned identifier for the subscription. The SubscriptionId type is technology dependent.

5.1.6.8.2.3 Service results

Table 22 defines values for the service result. Common results are defined in Table 8.

Table 22 – CreateSubscription Service result codes

Result code	Description
Bad_TooManySubscriptions	The FDI Server has reached its maximum number of subscriptions.

5.1.6.8.3 Subscribe Service

5.1.6.8.3.1 Description

This service is used to add one or more Node Attributes to an existing subscription.

Subscribing is permitted for all Node Attributes.

5.1.6.8.3.2 Parameters

Table 23 defines the parameters for the service.

Documents
Document Sharing Hub
Full document details: IEC 62769-2 2021 RLV

Table 23 – Subscribe Service parameters

Name	Type	Description
Request		
subscriptionId	SubscriptionId	The identifier for an existing subscription that was returned by the CreateSubscription service.
returnInnerErrorInfo	Boolean	A value of "true" requests error information from calls to an underlying system to be passed in DataChangeCallbacks, when available. "false" defines that this information shall not be returned.
monitoredItemsToAdd[]	structure	The Attributes to add to the subscription.
node	NodeSpecifier	The identifier of the Node that contains the Attribute to subscribe. See 5.1.9.3.2 for the definition of the NodeSpecifier type.
attributeId	AttributeId	Numeric identifier of the Attribute to subscribe. See 5.1.9.3.3.
indexRange	NumericRange	This parameter is used to identify a single element of an array, or a single range of indexes for arrays. If a range of elements is specified, the values are returned as a composite. The first element is identified by index 0 (zero). This parameter is ignored if the specified Attribute is not an array or a structure. However, if the specified Attribute is an array or a structure, and this parameter is null, then all elements are to be included in the range. See 5.1.9.3.6 for a detailed definition.
samplingInterval	Int32	The interval that defines the fastest rate at which the Attribute should be accessed and evaluated. This interval is defined in milliseconds. The value 0 indicates that the FDI Server should use the fastest practical rate. The value −1 indicates that the default sampling interval defined by the UpdateRate of the Subscription is used. See 5.1.6.8.3.3 for further details on the sampling interval.
uIPHandle	UInt32	A handle (an identifier) provided by the UIP for the subscribed Node Attribute. This handle will be passed together with the data in the DataChangeCallback service so that the UIP can easily associate each changed value with the subscribed Node Attribute. The uiPHandle is likely an index into a table somewhere. It does not have to be unique (there could be multiple subscribed items pointing to the same table entry).
Response		
subscribeResult []	structure	List of results for the subscribed Attributes. The size and order of the list matches the size and order of the attributesToSubscribe request parameter.
statusCode	UInt32	Status code for the respective Attribute to subscribe as defined in Table 24.
monitoredItemId	UInt32	FDI Server-assigned id for the subscribed Attribute. This id is unique within the Subscription and shall be used when calling Unsubscribe. This parameter is present only if the statusCode indicates that the Attribute was successfully subscribed.
revisedSamplingInterval	Int32	The actual sampling interval that will be used. This value is based on a number of factors, including the capabilities of the underlying system.

Subscribing will succeed even if the current user is not authorized to access the Node Attribute. If this is the case, the initial callback will return the operation result "Bad_UserAccessDenied". Once this denial is cleared away (for instance, after a more powerful user identity is provided) the UIP will receive data changes for this Node Attribute.

Documents
Document Sharing Hub
Full document details: IEC 62769-2 2021 RLV

It is possible to subscribe to any Attribute – not just the Value. While it may not make sense for all Attributes, monitoring of some Attributes provides additional possibilities. Some examples include:

- monitoring the LockedStatus to determine when the lock by some other client is removed;
- monitoring the CurrentLabel of Enumerations to receive a displayable name rather than a numeric value.

5.1.6.8.3.3 Sampling interval

Each subscribed item is assigned a sampling interval that is either inherited from the updateRate of the Subscription or that is defined specifically to override that rate. The sampling interval indicates the fastest rate at which the value should be sampled in the device for data changes.

The assigned sampling interval defines a "best effort" cyclic rate that is used to sample the item from its source. "Best effort" in this context means that the system does its best to sample at this rate. Sampling at rates faster than this rate is acceptable, but not necessary to meet the needs of the UIP. How the system deals with the sampling rate and how often it actually polls its data source internally is a system implementation detail. However, the time between values returned to the UIP shall be greater than or equal to the sampling interval.

The FDI Client may also specify 0 for the sampling interval, which indicates that the system should use the fastest practical rate. It is expected that systems will support only a limited set of sampling intervals to optimize their operation. If the exact interval requested by the UIP is not supported, then the most appropriate interval as determined by the system will be assigned and returned to the UIP.

Data may be collected based on a sampling model or generated based on an exception-based model. The fastest supported sampling interval may be equal to 0, which indicates that the data item is exception-based rather than being sampled at some period. When it is exception-based, the underlying system does not require sampling.

In many cases, the system has no knowledge of the data update logic. In this case, even though the system samples at the negotiated rate, the data might be updated by the underlying system at a much slower rate. In this case, changes can only be detected at this slower rate.

UIPs should also be aware that the sampling by the system and the update cycle of the device are usually not synchronized, which ~~may~~ can lead to additional delays.

5.1.6.8.3.4 Service results

There are no service results other than the common codes specified in 5.1.4.6.

5.1.6.8.3.5 Operation result codes

Table 24 defines values for the operation statusCode contained in the results. All operational status codes with their description are in Table 9.

Documents
Document Sharing Hub

Full document details: IEC 62769-2 2021 RLV

Table 24 – Subscribe operation result codes

Result code
Good
Bad
Bad_NodeInvalid
Bad_AttributeInvalid
Bad_NotReadable
Bad_UserAccessDenied

5.1.6.8.4 Unsubscribe Service

5.1.6.8.4.1 Description

This service is used to unsubscribe to one or more Node Attributes.

5.1.6.8.4.2 Parameters

Table 25 defines the parameters for the service.

Table 25 – Unsubscribe Service Parameters

Name	Type	Description
Request		
subscriptionId	SubscriptionId	The identifier for an existing subscription that was returned by the CreateSubscription service.
monitoredItemIds[]	UInt32	Identifiers for subscribed Attributes that were returned by the Subscribe service.
Response		
unsubscribeResult[]	UInt32	Status codes for operation results as defined in Table 26. The order of this list matches the order of the monitoredItemIds request parameter.

5.1.6.8.4.3 Service results

There are no service results other than the common codes specified in 5.1.4.6.

5.1.6.8.4.4 Operation result codes

Table 26 defines values for the operation status code contained in unsubscribeResult. All operational status codes with their description are in Table 9.

Table 26 – Unsubscribe operation result codes

Result code
Good
Bad
Bad_UIPHandleInvalid

Documents
Document Sharing Hub
Full document details: IEC 62769-2 2021 RLV

5.1.6.8.5 DeleteSubscription Service

5.1.6.8.5.1 Description

This service is used to delete a subscription. ~~Due~~ Owing to the asynchronous nature of the callbacks, the UIP may receive additional callbacks for a subscription after the subscription is deleted.

5.1.6.8.5.2 Parameters

Table 27 defines the parameters for the service.

Table 27 – DeleteSubscription Service parameters

Name	Type	Description
Request		
subscriptionId	SubscriptionId	The identifier for an existing subscription that was returned by the CreateSubscription service.
Response		

5.1.6.8.5.3 Service results

There are no service results other than the common codes specified in 5.1.4.6.

5.1.6.8.6 DataChangeCallback Service

5.1.6.8.6.1 Description

This service is used for sending data change updates to the UIP. This service is implemented and provided by the UIP when calling the CreateSubscription service.

~~Due~~ Owing to the asynchronous nature of the callbacks, the UIP may receive additional callbacks for a subscription after the subscription is deleted.

5.1.6.8.6.2 Parameters

Table 28 defines the parameters for the service.

Table 28 – DataChangeCallback Service parameters

Name	Type	Description
Request		
subscriptionId	SubscriptionId	Identifier that was returned by the CreateSubscription service
dataChangeData[]	structure	Data that has changed. No specific order of array elements is ensured.
uIPHandle	UInt32	The handle provided by the UIP in the Subscribe service
value	DataValue	The StatusCode, Value and timestamps of the subscribed Node Attribute. The DataValue is defined in 5.1.9.3.3.
innerErrorInfos []	InnerErrorInfo	List of error information from calls to an underlying system. See 5.1.9.3.4. Matches the size and order of the dataChangeData parameter. This list is empty if inner error information was not requested or if no information was encountered in the processing of the request.
Response		

AVA Documents
Document Sharing Hub
Full document details: IEC 62769-2 2021 RLV

5.1.6.8.6.3 Operation result codes

Table 29 defines values for the operation status code contained in the DataChangeData structure of each values element. In addition, all Read operation status codes apply also (see Table 16). All operational status codes with their description are in Table 9.

Table 29 – DataChangeCallback result codes

Result code
Bad_WaitingForInitialData

5.1.7 Locking Services

5.1.7.1 Overview

Locking is the means to avoid concurrent modifications to a Device or a Block and its Parameters. UIPs shall use the Locking Services before making changes (for example, write operations and Direct Access Services).

The lock always applies to both the online and the offline version.

When locking a Modular Device, the lock applies to the complete device (including all modules). Equally, when locking a Block Device, the lock applies to the complete Device (including all Blocks).

If no lock is applied to the top-level Device (for Modular Device or for Block Device), the Sub-Devices or Blocks, respectively, can be locked independently.

While locked, requests from other FDI Clients to write to Parameters, or to perform Direct Access will be rejected.

The lock is removed when ExitLock is called.

5.1.7.2 InitLock service

5.1.7.2.1 Description

InitLock reserves the specified Device or Block. During a lock other FDI Clients will not be able to write to the Parameters of this element. A lock for an element that is already locked by another FDI Client will be rejected. A UIP can subscribe to the LockedStatus Attribute in order to be informed when the lock is removed by the other Client.

FDI Clients shall allow "nested" InitLock calls from the same UIP. The FDI Client expects the same number of ExitLock calls before it actually removes the lock.

FDI Clients are responsible for preventing simultaneous locks to a Device or Block by independent components that this Client hosts. Such components include the Client itself, independent UIPs or the UID Interpreter.

5.1.7.2.2 Parameters

Table 30 defines the parameters for the service.

Documents
Document Sharing Hub
Full document details: IEC 62769-2 2021 RLV

Table 30 – InitLock Service parameters

Name	Type	Description
Request		
node	NodeSpecifier	The identifier of the Node (representing a device or block) to be locked. See 5.1.9.3.2 for the definition of the NodeSpecifier type.
context	String	Used to provide context information about the current activity going on in the UIP. This will be used to enhance the Audit Trail.
Response		

5.1.7.2.3 Service results

Table 31 defines values for the Service result code. Other common StatusCodes are defined in Table 8.

Table 31 – InitLock Service result codes

Result code	Description
Bad_NotSupported	The Node does not support locking.
Bad_AlreadyLocked	The Node is already locked by another FDI Client or another independent component within the FDI Client.

5.1.7.3 ExitLock service

5.1.7.3.1 Description

ExitLock removes the lock.

5.1.7.3.2 Parameters

Table 32 defines the parameters for the service.

Table 32 – ExitLock Service parameters

Name	Type	Description
Request		
node	NodeSpecifier	The identifier of the Node (representing a device or block) to be unlocked. See 5.1.9.3.2 for the definition of the NodeSpecifier type.
Response		

5.1.7.3.3 Service results

Table 33 defines values for the Service result code. Other common StatusCodes are defined in Table 8.

Table 33 – ExitLock Service result codes

Result code	Description
Bad_ InvalidState	The Node is not locked.

Documents
Document Sharing Hub
Full document details: IEC 62769-2 2021 RLV

5.1.8 Direct Access Services

5.1.8.1 Overview

Direct Access Services provide direct communication with a Device. This can be used for operations that cannot or at least not easily be performed through the Device Model Services. Use cases include the transmission of large data buckets from or to the Device, for example, historical data or firmware. The Direct Access Services should not influence the structure and the data integrity of the Device Model. Support of Direct Access Services is mandatory for FDI Hosts. However, Host Systems shall provide means to disable/enable Direct Access Services on demand. Commissioning engineers or plant operators can then disallow the use of Direct Access in specific scenarios. This can be temporary, or even permanent, and might apply to the complete or specific parts of the plant. Therefore, UIPs shall not depend on the availability of Direct Access for the initial setup of a Device (e.g. needed for commissioning).

The following behavior applies when using Direct Access.

- Only one FDI Client/UIP can use DirectAccess at a given time. While in Direct Access mode, other ~~Clients~~ FDI Clients or OPC UA Clients, or other UIPs or the UID will not be able to access this Device (not even for Reading).
- The Device shall have been locked prior to entering this mode.
- If Variable Attributes may have changed due to DirectAccess, the UIP shall set the InvalidateCache in the EndDirectAccess argument to "true".

The Direct Access Services include:

- InitDirectAccess
- Transfer
- ExitDirectAccess

Guideline:

These services are not to be used as alternative to Information Model access. Instead, DirectAccess is used for the transfer of data that are not reflected in the Information Model.

5.1.8.2 InitDirectAccess

5.1.8.2.1 Description

This service initializes the Device for the use of DirectAccess.

5.1.8.2.2 Parameters

Table 34 defines the parameters for the service.

Table 34 – InitDirectAccess Service parameters

Name	Type	Description
Request		
context	String	Used to provide context information about the current activity going on in the UIP. This will be used to enhance the Audit Trail.
Response		

5.1.8.2.3 Service results

Table 35 defines values for the Service result code. Other common StatusCodes are defined in Table 8.

Documents
Document Sharing Hub
Full document details: IEC 62769-2 2021 RLV

Table 35 – InitDirectAccess Service result codes

Result code	Description
Bad_NotSupported	DirectAccess is (currently) not supported.
Bad_LockRequired	The Node has not been locked.
Bad_InvalidState	DirectAccess is already initialized.

5.1.8.3 ExitDirectAccess

5.1.8.3.1 Description

This service ends the use of DirectAccess.

5.1.8.3.2 Parameters

Table 36 defines the parameters for the service.

Table 36 – ExitDirectAccess Service parameters

Name	Type	Description
Request		
invalidateCache	Boolean	If "true", any cached values for Device Parameters will be invalidated. This means that these Parameters will be re-read from the Device the next time they are used again.
Response		

5.1.8.3.3 Service results

Table 37 defines values for the Service result code. Other common StatusCodes are defined in Table 8.

Table 37 – ExitDirectAccess Service result codes

Result code	Description
Bad_InvalidState	The device is not in DirectAccess mode.

5.1.8.4 Transfer

5.1.8.4.1 Description

This service is used to transfer data to and from the Device. The format of send or receive data is protocol-specific.

Direct Access by its nature does not allow automatic generation of Audit Trail information that complies with the various regulations. Therefore, UIPs shall invoke the LogAuditTrailMessage Service (see 5.2.2.5) to provide explicit information about what is being transferred.

For other service calls that affect the Device indirectly via the Device Model (Write), the service parameters provide sufficient information.

Documents
Document Sharing Hub
Full document details: IEC 62769-2 2021 RLV