IEC 62803

Edition 1.0 2016-07

INTERNATIONAL STANDARD

NORME INTERNATIONALE

Transmitting equipment for radiocommunication – Frequency response of optical-to-electric conversion device in high-frequency radio over fibre systems – Measurement method

Matériels émetteurs pour les radiocommunications – Réponse en fréquence des dispositifs de conversion optique-electrique dans des systèmes de transmission radio sur fibre haute fréquence – Méthode de mesure

IEC 62803:2016-07(en-fr)

Documents
Document Sharing Hub
Full document details: IEC 62803 2016

THIS PUBLICATION IS COPYRIGHT PROTECTED
Copyright © 2016 IEC, Geneva, Switzerland

All rights reserved. Unless otherwise specified, no part of this publication may be reproduced or utilized in any form or by any means, electronic or mechanical, including photocopying and microfilm, without permission in writing from either IEC or IEC's member National Committee in the country of the requester. If you have any questions about IEC copyright or have an enquiry about obtaining additional rights to this publication, please contact the address below or your local IEC member National Committee for further information.

Droits de reproduction réservés. Sauf indication contraire, aucune partie de cette publication ne peut être reproduite ni utilisée sous quelque forme que ce soit et par aucun procédé, électronique ou mécanique, y compris la photocopie et les microfilms, sans l'accord écrit de l'IEC ou du Comité national de l'IEC du pays du demandeur. Si vous avez des questions sur le copyright de l'IEC ou si vous désirez obtenir des droits supplémentaires sur cette publication, utilisez les coordonnées ci-après ou contactez le Comité national de l'IEC de votre pays de résidence.

IEC Central Office
3, rue de Varembé
CH-1211 Geneva 20
Switzerland

Tel.: +41 22 919 02 11
Fax: +41 22 919 03 00
info@iec.ch
www.iec.ch

About the IEC
The International Electrotechnical Commission (IEC) is the leading global organization that prepares and publishes International Standards for all electrical, electronic and related technologies.

About IEC publications
The technical content of IEC publications is kept under constant review by the IEC. Please make sure that you have the latest edition, a corrigenda or an amendment might have been published.

IEC Catalogue - webstore.iec.ch/catalogue
The stand-alone application for consulting the entire bibliographical information on IEC International Standards, Technical Specifications, Technical Reports and other documents. Available for PC, Mac OS, Android Tablets and iPad.

IEC publications search - www.iec.ch/searchpub
The advanced search enables to find IEC publications by a variety of criteria (reference number, text, technical committee,…). It also gives information on projects, replaced and withdrawn publications.

IEC Just Published - webstore.iec.ch/justpublished
Stay up to date on all new IEC publications. Just Published details all new publications released. Available online and also once a month by email.

Electropedia - www.electropedia.org
The world's leading online dictionary of electronic and electrical terms containing 20 000 terms and definitions in English and French, with equivalent terms in 15 additional languages. Also known as the International Electrotechnical Vocabulary (IEV) online.

IEC Glossary - std.iec.ch/glossary
65 000 electrotechnical terminology entries in English and French extracted from the Terms and Definitions clause of IEC publications issued since 2002. Some entries have been collected from earlier publications of IEC TC 37, 77, 86 and CISPR.

IEC Customer Service Centre - webstore.iec.ch/csc
If you wish to give us your feedback on this publication or need further assistance, please contact the Customer Service Centre: csc@iec.ch.

A propos de l'IEC
La Commission Electrotechnique Internationale (IEC) est la première organisation mondiale qui élabore et publie des Normes internationales pour tout ce qui a trait à l'électricité, à l'électronique et aux technologies apparentées.

A propos des publications IEC
Le contenu technique des publications IEC est constamment revu. Veuillez vous assurer que vous possédez l'édition la plus récente, un corrigendum ou amendement peut avoir été publié.

Catalogue IEC - webstore.iec.ch/catalogue
Application autonome pour consulter tous les renseignements bibliographiques sur les Normes internationales, Spécifications techniques, Rapports techniques et autres documents de l'IEC. Disponible pour PC, Mac OS, tablettes Android et iPad.

Recherche de publications IEC - www.iec.ch/searchpub
La recherche avancée permet de trouver des publications IEC en utilisant différents critères (numéro de référence, texte, comité d'études,…). Elle donne aussi des informations sur les projets et les publications remplacées ou retirées.

IEC Just Published - webstore.iec.ch/justpublished
Restez informé sur les nouvelles publications IEC. Just Published détaille les nouvelles publications parues. Disponible en ligne et aussi une fois par mois par email.

Electropedia - www.electropedia.org
Le premier dictionnaire en ligne de termes électroniques et électriques. Il contient 20 000 termes et définitions en anglais et en français, ainsi que les termes équivalents dans 15 langues additionnelles. Egalement appelé Vocabulaire Electrotechnique International (IEV) en ligne.

Glossaire IEC - std.iec.ch/glossary
65 000 entrées terminologiques électrotechniques, en anglais et en français, extraites des articles Termes et Définitions des publications IEC parues depuis 2002. Plus certaines entrées antérieures extraites des publications des CE 37, 77, 86 et CISPR de l'IEC.

Service Clients - webstore.iec.ch/csc
Si vous désirez nous donner des commentaires sur cette publication ou si vous avez des questions contactez-nous: csc@iec.ch.

Documents
Document Sharing Hub

Full document details: IEC 62803 2016

IEC 62803

Edition 1.0 2016-07

INTERNATIONAL STANDARD

NORME INTERNATIONALE

Transmitting equipment for radiocommunication – Frequency response of optical-to-electric conversion device in high-frequency radio over fibre systems – Measurement method

Matériels émetteurs pour les radiocommunications – Réponse en fréquence des dispositifs de conversion optique-electrique dans des systèmes de transmission radio sur fibre haute fréquence – Méthode de mesure

INTERNATIONAL
ELECTROTECHNICAL
COMMISSION

COMMISSION
ELECTROTECHNIQUE
INTERNATIONALE

ICS 33.060.20

ISBN 978-2-8322-3392-4

Warning! Make sure that you obtained this publication from an authorized distributor.
Attention! Veuillez vous assurer que vous avez obtenu cette publication via un distributeur agréé.

® Registered trademark of the International Electrotechnical Commission
Marque déposée de la Commission Electrotechnique Internationale

Documents
Document Sharing Hub

Full document details: IEC 62803 2016

CONTENTS

FOREWORD 4
INTRODUCTION 6
1 Scope 7
2 Normative references 7
3 Terms, definitions and abbreviations 7
3.1 Terms and definitions 7
3.2 Abbreviations 9
4 Optical-to-electrical (O/E) conversion device 9
4.1 Photo diode (PD) 9
4.1.1 General 9
4.1.2 Component parts 9
4.1.3 Structure 9
4.1.4 Requirements for PD 10
4.2 DFG device 10
4.2.1 General 10
4.2.2 Component parts 10
4.2.3 Structure 10
4.2.4 Requirements for DFG device 10
5 Sampling for quality control 11
5.1 Sampling 11
5.2 Sampling frequency 11
6 Measurement method of frequency response 11
6.1 Circuit diagram 11
6.2 Measurement condition 12
6.2.1 Temperature and environment 12
6.2.2 Warming up of measurement equipment 12
6.3 Principle of measurement method 12
6.4 Measurement procedure 13
Annex A (normative) Power balanced two-tone signal generation by using a high extinction-ratio MZM [2] 15
Annex B (informative) Requirements for the optical amplifier with automatic level control 17
B.1 Introductory remark 17
B.2 Block diagram 17
B.2.1 Optical amplifier 17
B.2.2 Automatic level control 18
B.3 Function and capabilities 18
B.4 Requirements 19
B.4.1 Optical amplifier 19
B.4.2 Automatic level control (ALC) 20
Annex C (informative) Frequency-response measurement system and automatic level control EDFA 21
C.1 Frequency response measurement system for optical-to-electric conversion devices with a two-tone generator 21
C.2 Automatic level control EDFA (ALC-EDFA) 22
Bibliography 24

AVA Documents
Document Sharing Hub
Full document details: IEC 62803 2016

Figure 1 – Definition of "conversion efficiency " 8
Figure 2 – Optical-to-electrical conversion by photo diode 10
Figure 3 – DFG device 10
Figure 4 – Circuit diagram 11
Figure B.1 – Block diagram of the optical amplifier 17
Figure B.2 – Block diagram of the automatic level control 18
Figure B.3 – Frequency characteristics 19
Figure C.1 – System configuration for the frequency response measurement system 21
Figure C.2 – ALC-EDFA system configuration 22
Figure C.3 – Frequency response measurement examples 23

Table C.1 – Typical specifications of the frequency response measurement system 22
Table C.2 – Typical specifications of the ALC-EDFA system 23

Documents
Document Sharing Hub

Full document details: IEC 62803 2016

INTERNATIONAL ELECTROTECHNICAL COMMISSION

TRANSMITTING EQUIPMENT FOR RADIOCOMMUNICATION – FREQUENCY RESPONSE OF OPTICAL-TO-ELECTRIC CONVERSION DEVICE IN HIGH-FREQUENCY RADIO OVER FIBRE SYSTEMS – MEASUREMENT METHOD

FOREWORD

1) The International Electrotechnical Commission (IEC) is a worldwide organization for standardization comprising all national electrotechnical committees (IEC National Committees). The object of IEC is to promote international co-operation on all questions concerning standardization in the electrical and electronic fields. To this end and in addition to other activities, IEC publishes International Standards, Technical Specifications, Technical Reports, Publicly Available Specifications (PAS) and Guides (hereafter referred to as "IEC Publication(s)"). Their preparation is entrusted to technical committees; any IEC National Committee interested in the subject dealt with may participate in this preparatory work. International, governmental and non-governmental organizations liaising with the IEC also participate in this preparation. IEC collaborates closely with the International Organization for Standardization (ISO) in accordance with conditions determined by agreement between the two organizations.
2) The formal decisions or agreements of IEC on technical matters express, as nearly as possible, an international consensus of opinion on the relevant subjects since each technical committee has representation from all interested IEC National Committees.
3) IEC Publications have the form of recommendations for international use and are accepted by IEC National Committees in that sense. While all reasonable efforts are made to ensure that the technical content of IEC Publications is accurate, IEC cannot be held responsible for the way in which they are used or for any misinterpretation by any end user.
4) In order to promote international uniformity, IEC National Committees undertake to apply IEC Publications transparently to the maximum extent possible in their national and regional publications. Any divergence between any IEC Publication and the corresponding national or regional publication shall be clearly indicated in the latter.
5) IEC itself does not provide any attestation of conformity. Independent certification bodies provide conformity assessment services and, in some areas, access to IEC marks of conformity. IEC is not responsible for any services carried out by independent certification bodies.
6) All users should ensure that they have the latest edition of this publication.
7) No liability shall attach to IEC or its directors, employees, servants or agents including individual experts and members of its technical committees and IEC National Committees for any personal injury, property damage or other damage of any nature whatsoever, whether direct or indirect, or for costs (including legal fees) and expenses arising out of the publication, use of, or reliance upon, this IEC Publication or any other IEC Publications.
8) Attention is drawn to the Normative references cited in this publication. Use of the referenced publications is indispensable for the correct application of this publication.

International Standard IEC 62803 has been prepared by IEC technical committee 103: Transmitting equipment for radiocommunication.

The text of this standard is based on the following documents:

FDIS	Report on voting
103/147/FDIS	103/148/RVD

Full information on the voting for the approval of this standard can be found in the report on voting indicated in the above table.

This publication has been drafted in accordance with the ISO/IEC Directives, Part 2.

Documents
Document Sharing Hub

Full document details: IEC 62803 2016

The committee has decided that the contents of this publication will remain unchanged until the stability date indicated on the IEC web site under "http://webstore.iec.ch" in the data related to the specific publication. At this date, the publication will be

- reconfirmed,
- withdrawn,
- replaced by a revised edition, or
- amended.

Documents
Document Sharing Hub

Full document details: IEC 62803 2016

INTRODUCTION

A variety of microwave-photonic devices are used in wireless communication and broadcasting systems. A photo-receiver is an interface which converts an optical signal to an electronic signal. This International Standard has been prepared to provide methods for evaluating and calibrating high speed photo-receivers to be used in Radio over Fibre systems.

The method utilizes a Mach-Zehnder modulator for generating two-tone lightwaves as stimulus signals, to provide simpler and easier methods than the conventional method utilizing a complex two-laser system phase-locked with each other.

The International Electrotechnical Commission (IEC) draws attention to the fact that it is claimed that compliance with this document may involve the use of a patent concerning a calibration method and device for light intensity measuring instrument, as it relates to Clause 6.

Related part	Patent holder	Patent number
Clause 6	National Institute of Information and Communications Technology	JP 4753137B EP1956353A US7864330B

IEC takes no position concerning the evidence, validity and scope of this patent right.

The holder of this patent right has assured the IEC that he/she is willing to negotiate licences either free of charge or under reasonable and non-discriminatory terms and conditions with applicants throughout the world. In this respect, the statement of the holder of this patent right is registered with IEC. Information may be obtained from:

National Institute of Information and Communications Technology
4-2-1 Nukui-Kitamachi, Koganei, Tokyo 184-8795, Japan

Attention is drawn to the possibility that some of the elements of this document may be the subject of patent rights other than those identified above. IEC shall not be held responsible for identifying any or all such patent rights.

ISO (www.iso.org/patents) and IEC (http://patents.iec.ch) maintain on-line data bases of patents relevant to their standards. Users are encouraged to consult the data bases for the most up to date information concerning patents.

Documents
Document Sharing Hub

Full document details: IEC 62803 2016

TRANSMITTING EQUIPMENT FOR RADIOCOMMUNICATION – FREQUENCY RESPONSE OF OPTICAL-TO-ELECTRIC CONVERSION DEVICE IN HIGH-FREQUENCY RADIO OVER FIBRE SYSTEMS – MEASUREMENT METHOD

1 Scope

This International Standard provides a method for measuring the frequency response of optical-to-electric conversion devices in wireless communication and broadcasting systems.

The frequency range covered by this standard goes up to 100 GHz (practically limited up to 110 GHz by precise RF power measurement) and the wavelength band concerned is 0,8 μm to 2,0 μm.

2 Normative references

The following documents, in whole or in part, are normatively referenced in this document and are indispensable for its application. For dated references, only the edition cited applies. For undated references, the latest edition of the referenced document (including any amendments) applies.

There are no normative references in this document.

3 Terms, definitions and abbreviations

3.1 Terms and definitions

For the purposes of this document, the following terms and definitions apply.

3.1.1
conversion efficiency
ratio of the output current to the input optical power defined by

$$k = \frac{\Delta I_{\text{out}}}{\Delta P_{\text{in}}} \tag{1}$$

Note 1 to entry: See Figure 1.

Documents
Document Sharing Hub
Full document details: IEC 62803 2016

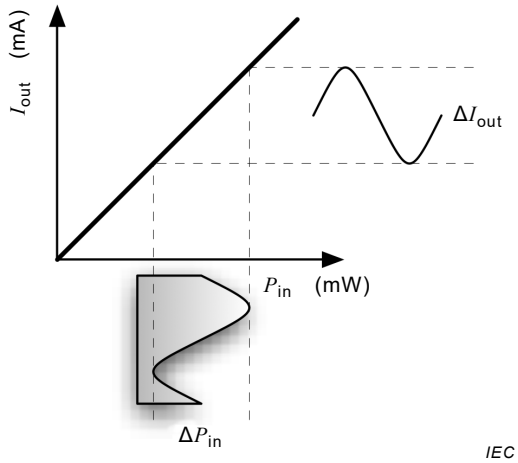

Figure 1 – Definition of "conversion efficiency "

Note 2 to entry: Conversion efficiency k, which depends on modulating signal frequency,is often expressed in dB as the ratio to the reference conversion efficiency of 1 (ampere per watt). It is well known, however, that dB has two definitions. One is the optical conversion efficiency k_o [dB_o] calculated from $10\times\log_{10}(\Delta I_{out}/\Delta P_{in})$, and the other is the electrical conversion efficiency k_e [dB_e] calculated from $20\times \log_{10}(\Delta I_{out}/\Delta P_{in})$. As for the conversion efficiency k, the numerator is the amplitude of the electrical output signal, and the denominator is the power of optical input signal. Therefore, both definitions of dB for conversion efficiency k_o *and* k_e are shown as follows:

$$k_o = k_o[\mathrm{dB_o}] = 10 * \log_{10} \frac{\Delta I_{\mathrm{out}}}{\Delta P_{\mathrm{in}}} \tag{2}$$

$$k_e = k_e[\mathrm{dB_e}] = 20 * \log_{10} \frac{\Delta I_{\mathrm{out}}}{\Delta P_{\mathrm{in}}} \tag{3}$$

3.1.2
two-tone lightwave

lightwave that contains two dominant spectral components whose power difference is relatively small and frequency separation is stable

Note 1 to entry: Undesired spectral components are suppressed significantly. The measurement methods described in this standard utilize a Mach-Zehnder modulator (MZM) for two-tone signal generation, where the MZM is biased at maximum or minimum transmission points (null or full bias) [1][1]. The suppression ratio of undesired components depends on the on-off extinction ratio and chirp parameter of the MZM. By using active trimming, high extinction-ratio and low chirp modulation can be achieved for ideal two-tone generation (see Annex A).

3.1.3
carrier-suppressed

situation when an MZM is biased at its minimum transmission point, the non-modulated carrier lightwave transmitted through and the two arms of the MZM are cancelled with each other at the output coupler

Note 1 to entry: The suppression ratio is related to how the two lightwaves in the two arms have the same power and to their anti-phase at the output coupler.

[1] Numbers in square brackets refer to the Bibliography.

Documents
Document Sharing Hub
Full document details: IEC 62803 2016

3.2 Abbreviations

AGC-EDFA	Automatic gain controlled-EDF amplifier
ALC	Automatic level control
DFG	Difference frequency generation
DUT	Device under test
E/O	Electrical-to-optical
EDFA	Er-doped fibre amplifier
FPGA	Field programmable gate array
LD	Laser diode.
MZM	Mach-Zehnder modulator
O/E	Optical-to-electrical
OMI	Optical modulation index
PD	Photo diode
PN	Positive-negative
RF	Radio frequency
RoF	Radio over fibre
VOA	Variable optical attenuator

4 Optical-to-electrical (O/E) conversion device

4.1 Photo diode (PD)

4.1.1 General

A PD has a positive-negative (PN) junction which can be illuminated by an optical signal. When a photon is incident to the PN junction, an electron is excited and an electron-hole pair is generated. The electron and hole drift to the opposite direction because of the built-in and reverse-biased voltage at the PN junction, and can be used as an output electric current.

4.1.2 Component parts

The O/E conversion devices consist of basic parts as follows:

– PD;
– input fibre pigtail (where appropriate);
– input receptacle (where appropriate);
– output RF port (where appropriate);
– bias electrode (where appropriate);
– transimpedance amplifier (where appropriate);
– impedance matching resistor (where appropriate).

4.1.3 Structure

The structure consists of the following (see Figure 2):

– optical input: fibre pigtail or receptacle;
– RF output: coaxial connector, microstrip line, coplanar waveguide, antenna, etc.;
– options: bias electrode, transimpedance amplifier, impedance-matching resistor.

Documents
Document Sharing Hub
Full document details: IEC 62803 2016

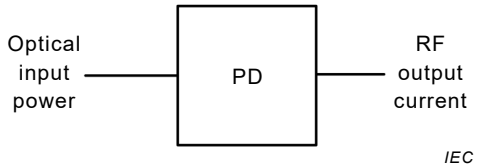

Figure 2 – Optical-to-electrical conversion by photo diode

4.1.4 Requirements for PD

4.1.4.1 General

This method is based on a heterodyne principle. Requirements for the PD of this measurement method are as follows.

4.1.4.2 Material of PD

Main materials of the PDs should be Si, GaAs, and InGaAs.

4.2 DFG device

4.2.1 General

When two coherent lightwaves are incident to a DFG device fabricated from a second order nonlinear optical material, an RF signal with the difference frequency between the incident lightwaves is generated.

4.2.2 Component parts

The component parts are as follows:

– DFG device;

– input optical lens (where appropriate);

– output RF antenna (where appropriate).

4.2.3 Structure

See Figure 3.

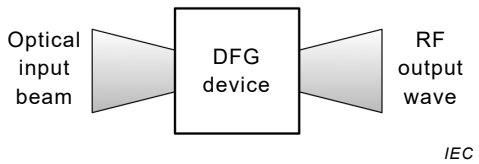

Figure 3 – DFG device

4.2.4 Requirements for DFG device

4.2.4.1 General

This method is based on the heterodyne principle. Requirements for the DFG device of this measurement method are as follows.

4.2.4.2 Material

The main substrate materials of the DFG device should be materials such as $LiNbO_3$, $LiTaO_3$, KH_2PO_4, PZT (Pb (Zr, Ti) O3), PLZT ((Pb, La) (Zr, Ti) O3), InP, GaAs, InGaAs, InAlAs, InGaAsP, Chromophore containing polymer, etc., which realize second order, nonlinear optical effect.

AVA Documents
Document Sharing Hub
Full document details: IEC 62803 2016

4.2.4.3 Device design

In general, the efficiency of the DFG is rather low. In order to enhance the conversion efficiency, the device length tends to be long, and phase matching conditions must be satisfied. Moreover, in order to avoid undesired RF wave radiation, an RF cavity or guiding structure is also required.

5 Sampling for quality control

5.1 Sampling

A statistically significant sampling plan shall be agreed upon by user and supplier. Sampled devices shall be randomly selected and representative of production population, and shall satisfy the quality assurance criteria using the proposed test methods.

5.2 Sampling frequency

Appropriate statistical methods shall be applied to determine adequate sample size and acceptance criteria for the considered lot size. In the absence of more detailed statistical analysis, the following sampling plan can be employed.

Sampling frequency for evaluation of frequency response: two units at least per manufacturing lot.

6 Measurement method of frequency response

6.1 Circuit diagram

See Figure 4.

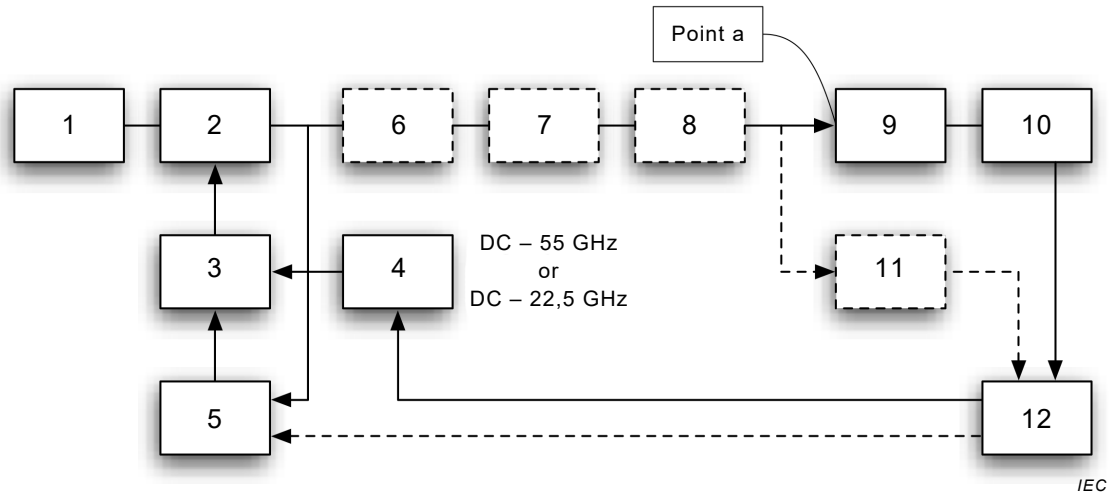

Key

1	Laser diode	7	Optical amplifier (optional)
2	MZM	8	Automatic level control (optional)
3	Bias tree	9	DUT
4	Microwave signal source (SC)	10	RF power meter or spectrum analyser
5	DC voltage source	11	Optical power meter (optional)
6	Optical band rejection filter (optional)	12	Personal computer

Figure 4 – Circuit diagram

Documents
Document Sharing Hub
Full document details: IEC 62803 2016

6.2 Measurement condition

6.2.1 Temperature and environment

The measurement should be carried out in a room at a temperature ranging from 5 °C to 35 °C. If the operation temperature ranges of the measurement apparatuses are narrower than the above range, the specifications of the measurement apparatuses should be followed. It is desirable to control the measurement temperature within ±5 °C in order to suppress the influence of temperature drift of measurement apparatuses to a minimum. The temperature of the DUT can be changed using a temperature controller, as necessary.

6.2.2 Warming up of measurement equipment

The warming-up time shall be kept to typically 60 min, or the time written in the specifications of the measurement equipment or systems.

6.3 Principle of measurement method

The method described here is based on the heterodyne principle. A two-tone lightwave illuminates the DUT as a stimulus signal. The two-tone stimulus lightwave is generated by using an MZM at null bias or an MZM at full bias with an optical band rejection filter. The average powers of the input two-tone lightwave and that of the output monotone RF signal are measured, and the conversion efficiency at the frequency is calculated from them. By changing the frequency difference between the two tones, the frequency response of O/E conversion efficiency of the DUT is obtained.

As is well known, an MZM optical output modulated by a monotone RF signal can be expressed by

$$E_{\text{opt}} = \sum_{n=\infty}^{\infty} E_n e^{i(\omega_n t + \phi_n)},\ P_{\text{opt}} = \sum_{-\infty}^{\infty} P_n\ ,\ P_n = [E_n]^2\text{, and } \omega_{RF} = \omega_{n+1} - \omega_n \tag{4}$$

where P_{opt} is the total average power, and ω_{RF} is the angular frequency of the modulating RF signal that corresponds to the angular frequency difference between adjacent optical tones. As an example, two-tone signal generation by an MZM with null-bias is described in 6.4. When

$$|E_{-1}| = |E_{+1}| >> |E_{\text{n}}|(n \neq -1,+1)\text{, and } P_{\text{opt}} \cong |E_{-1}|^2 + |E_{+1}|^2 = 2|E_{-1}|^2 \tag{5}$$

an ideal well-balanced optical two-tone consisting of $P_{\pm 1}$ (see 6.4) can be generated, where the following conditions should be satisfied:

a) suppression of optical carrier and higher order sidebands should be large enough;

b) frequency difference between the two desired components should be stable;

c) polarizations of the two spectral components should be well aligned;

d) power difference of the two spectral components should be small enough.

The instantaneous optical power P_{opt} illuminating the PD is calculated as

$$\begin{aligned} p_{\text{opt}} &= \left| E_{-1} e^{i(\omega_{-1} t + \phi_{-1})} + E_{+1} e^{i(\omega_{+1} t + \phi_{+1})} + \sum_{n=-\infty}^{\infty} E_{\text{n}} e^{i(\omega_n t + \phi_n)} \right|^2 (n \neq -1,+1) \\ &\cong P_{\text{opt}} + P_{\text{opt}} \times \cos(2\omega_{\text{RF}} t + \phi) \end{aligned} \tag{6}$$

Documents
Document Sharing Hub
Full document details: IEC 62803 2016

where $\phi = \phi_{-1} - \phi_{+1}$, and $|E_n|(n \neq -1,+1)$ related terms are neglected from Equation (5). The PD under test outputs a DC and an RF photocurrent as a response. The RF photocurrent i_{RF} induced by the ideal well-balanced optical two-tone consisting of $P_{\pm 1}$ or $P_{\pm 2}$ is expressed as

$$i_{RF} = k_e \times P_{opt} \times \cos(2\omega_{RF} t + \phi) = I_{RF} \cos(2\omega_{RF} t + \phi) \tag{7}$$

where k_e is the conversion efficiency of the PD under test at $2\omega_{RF}$, and i_{RF} is the peak photocurrent. ΔP_{in} is equal to P_{opt} giving 100% OMI (optical modulation index) and ΔI_{out} is nearly equal to I_{RF}, k_e is described as

$$k_e = \frac{\Delta I_{out}}{\Delta P_{in}} \cong \frac{I_{RF}}{P_{opt}} \tag{8}$$

where I_{RF} is the amplitude of RF photocurrent induced by the ideal optical two tone.

The average RF power P_{RF} driving a load Z_L is expressed as

$$P_{RF} = \frac{I_{RF}}{\sqrt{2}} \times \frac{I_{RF}}{\sqrt{2}} Z_L = \frac{I_{RF}^2 Z_L}{2} \tag{9}$$

From Equations (7), (8) and (9), the squared k_e which corresponds to the responsivity of the PD at the measurement frequency, is calculated as

$$k_e{}^2 = \frac{I_{RF}{}^2}{P_{opt}{}^2} = \frac{2P_{RF}}{Z_L P_{opt}{}^2} \tag{10}$$

Note that the squared k_e can be calculated only from the input optical and the output RF average powers of the PD under test, if the ideal well-balanced optical two tone is launched, which are traceable to the national standards with relatively short traceability chain. In this method, the squared k_e does not depend on the frequency response of the MZM used for two-tone generation.

6.4 Measurement procedure

Two types of measurement methods are described here. In Method A, a two-tone signal is generated by an MZM with null bias, where the signal is composed of the first upper and lower modulation side bands $P_{\pm 1}$. The frequency separation of the two-tone signal is equal to double the frequency of the signal fed to the MZM. In Method B, a two-tone signal is generated by an MZM with full bias, where the modulator output is composed of the carrier P_0 and the second upper and lower modulation sideband $P_{\pm 2}$. By using an optical band rejection filter, the P_0 component is eliminated to generate a two-tone signal consisting of $P_{\pm 2}$. The frequency separation of the two-tone signal is equal to quadruple the frequency of the signal fed to the MZM. The optical amplifier and auto level control in Figures B.1 and B.2 can enhance the frequency range of the measurement as described in Annexes B and C.

Method A

STEP 1) The measurement set-up is prepared as shown in Figures B.1 and B.2, where no optical band rejection filter is needed.

STEP 2) The output signal of SG is set as follows.

Frequency: the half of the responsivity measurement frequency.

Documents
Document Sharing Hub
Full document details: IEC 62803 2016

Output power: when the unwanted third-order harmonic distortions should be suppressed lower than –30 dB from the desired components, the signal power fed to the MZM should be smaller than

$$\left\{\frac{0{,}085 \times V_{\pi}(f)}{\pi}\right\}^2 \tag{11}$$

where, $V_{\pi}(f)$ is the half-wavelength voltage at the modulating frequency.

STEP 3) The DC voltage applied to the MZM should be controlled to maintain the null bias.

STEP 4) The optical power meter measures the input average optical power P_{opt} to the DUT at point "A". When P_{opt} is stabilized by ALC, it is not necessary to use the power meter.

STEP 5) The RF power meter measures the output average RF power P_{RF} from the DUT.

STEP 6) The conversion efficiency, k_{e}, at the measurement frequency is calculated by using the following formula:

$$k_{\text{e}} = \frac{\sqrt{P_{\text{RF}}}}{5P_{\text{opt}}} \tag{12}$$

STEP 7) Repeat from STEP 2 to STEP 6 with a different frequency.

Method B

STEP 1) The measurement set-up is prepared as shown in Figures B.1 and B.2, where the centre wavelength of the optical band rejection filter should be set to be the optical output wavelength of the laser diode.

STEP 2) The output signal of SG is set as follows:
Frequency: 25 % of the conversion efficiency measurement frequency.

STEP 3) The DC voltage applied to the MZM should be controlled to maintain the full bias, where the P_0 component is eliminated by the optical band rejection filter.

STEP 4) The optical power meter measures the input average optical power P_{opt} to the DUT at point "A". When P_{opt} is stabilized by ALC, it is not necessary to use the power meter.

STEP 5) The RF power meter measures the output average RF power PRF from the DUT.

STEP 6) The conversion efficiency, k, at the measurement frequency is calculated by using Equation (12).

STEP 7) Repeat from STEP 2 to STEP 6 with a different frequency.

Documents
Document Sharing Hub
Full document details: IEC 62803 2016

Annex A
(normative)

Power balanced two-tone signal generation by using a high extinction-ratio MZM [2]

Annex A describes an example of two-tone signal generation using an MZM at null bias with high extinction ratio. The bias point can be precisely controlled, when the extinction ratio is very high. At the null bias condition, the power difference between the two desired spectral components goes to the minimum.

Assuming a push-pull type MZM driven by a monotone RF signal of ω_{RF}, its output lightwave can be expressed as

$$\begin{aligned} E &= L\frac{E_{\mathrm{input}}e^{i\omega_0 t}}{2}\left[\left(1+\frac{\eta}{2}\right)e^{i\{A_1\sin(\omega_{\mathrm{RF}}t+\phi_1)+\phi_{\mathrm{B1}}\}}+\left(1-\frac{\eta}{2}\right)e^{i\{A_2\sin(\omega_{\mathrm{RF}}t+\phi_2)+\phi_{\mathrm{B2}}\}}\right] \\ &= L\frac{E_{\mathrm{input}}e^{i(\omega_0 t+\phi_{B1})}}{2}\sum_{n=-\infty}^{\infty}e^{in(\omega_{RF}t+\phi_1)}\left[\left(1+\frac{\eta}{2}\right)J_n(A+\alpha_{\mathrm{A}})+\left(1-\frac{\eta}{2}\right)J_n(-A+\alpha_{\mathrm{A}})e^{i(n\phi+\phi_{\mathrm{B}})}\right] \end{aligned} \tag{A.1}$$

where L is the loss factor inside the MZM, and $J_n(x)$ is the Bessel function of the first kind of order n. The values of ϕ_{B1}, ϕ_{B2}, ϕ_{B} are the bias phases, η is the optical intensity imbalance, ϕ_1, ϕ_2, ϕ are the skews, and A_1, A_2, A, α_{A} are the chirp related parameters defined as

$$\begin{aligned} &\phi_{\mathrm{B}} = \phi_{\mathrm{B2}}-\phi_{\mathrm{B1}},(P_1,P_2)=\frac{\left|L\times E_{\mathrm{input}}\right|^2}{4}\left(\left(1+\frac{\eta}{2}\right)^2,\left(1-\frac{\eta}{2}\right)^2\right),|\eta|<1 \\ &\phi=\phi_2-\phi_1,(A_1,A_2)=(A+\alpha_{\mathrm{A}},-A+\alpha_{\mathrm{A}}),|A|>|\alpha_{\mathrm{A}}| \end{aligned} \tag{A.2}$$

Equations (A.1) and (A.2) are well known for showing good agreements with the actual performance of MZMs, because four major error parameters of MZMs are all included [3, 4]. The powers of the carrier, the upper sideband, and the lower sideband, (named “0”, “+1” and “-1”, respectively) are derived as

$$\begin{aligned} P_0 &= |E_0|^2=\frac{\left|L\times E_{\mathrm{input}}\right|^2}{4}\left\{R^2+S^2+2RS\cos\phi_{\mathrm{B}}\right\} \\ P_{+1} &= |E_{+1}|^2=\frac{\left|L\times E_{\mathrm{input}}\right|^2}{4}\left\{T^2+U^2-2TU\cos(\phi_{\mathrm{B}}+\phi)\right\} \\ P_{-1} &= |E_{-1}|^2=\frac{\left|L\times E_{\mathrm{input}}\right|^2}{4}\left\{T^2+U^2-2TU\cos(\phi_{\mathrm{B}}-\phi)\right\} \\ R &= \left(1+\frac{\eta}{2}\right)J_0(A+\alpha_{\mathrm{A}}),S=\left(1-\frac{\eta}{2}\right)J_0(A-\alpha_{\mathrm{A}}) \\ T &= \left(1+\frac{\eta}{2}\right)J_1(A+\alpha_{\mathrm{A}}),U=\left(1-\frac{\eta}{2}\right)J_1(A-\alpha_{\mathrm{A}}) \end{aligned} \tag{A.3}$$

In the case of the MZM being biased at its minimum transmission point, which corresponds to the case of $\phi_{\mathrm{B}}=\pi$, the powers of P_0, P_{+1}, and P_{-1} are calculated as

AVA Documents
Document Sharing Hub
Full document details: IEC 62803 2016