IEC 62813

Edition 2.0 2025-01

INTERNATIONAL STANDARD

NORME INTERNATIONALE

Lithium-ion capacitors for use in electric and electronic equipment – Test methods for electrical characteristics

Condensateurs au lithium-ion destinés à être utilisés dans les équipements électriques et électroniques – Méthodes d'essai relatives aux caractéristiques électriques

IEC 62813:2025-01(en-fr)

Documents
Document Sharing Hub
Full document details: IEC 62813 2025

THIS PUBLICATION IS COPYRIGHT PROTECTED
Copyright © 2025 IEC, Geneva, Switzerland

All rights reserved. Unless otherwise specified, no part of this publication may be reproduced or utilized in any form or by any means, electronic or mechanical, including photocopying and microfilm, without permission in writing from either IEC or IEC's member National Committee in the country of the requester. If you have any questions about IEC copyright or have an enquiry about obtaining additional rights to this publication, please contact the address below or your local IEC member National Committee for further information.

Droits de reproduction réservés. Sauf indication contraire, aucune partie de cette publication ne peut être reproduite ni utilisée sous quelque forme que ce soit et par aucun procédé, électronique ou mécanique, y compris la photocopie et les microfilms, sans l'accord écrit de l'IEC ou du Comité national de l'IEC du pays du demandeur. Si vous avez des questions sur le copyright de l'IEC ou si vous désirez obtenir des droits supplémentaires sur cette publication, utilisez les coordonnées ci-après ou contactez le Comité national de l'IEC de votre pays de résidence.

IEC Secretariat
3, rue de Varembé
CH-1211 Geneva 20
Switzerland

Tel.: +41 22 919 02 11
info@iec.ch
www.iec.ch

About the IEC
The International Electrotechnical Commission (IEC) is the leading global organization that prepares and publishes International Standards for all electrical, electronic and related technologies.

About IEC publications
The technical content of IEC publications is kept under constant review by the IEC. Please make sure that you have the latest edition, a corrigendum or an amendment might have been published.

IEC publications search - webstore.iec.ch/advsearchform
The advanced search enables to find IEC publications by a variety of criteria (reference number, text, technical committee, …). It also gives information on projects, replaced and withdrawn publications.

IEC Just Published - webstore.iec.ch/justpublished
Stay up to date on all new IEC publications. Just Published details all new publications released. Available online and once a month by email.

IEC Customer Service Centre - webstore.iec.ch/csc
If you wish to give us your feedback on this publication or need further assistance, please contact the Customer Service Centre: sales@iec.ch.

IEC Products & Services Portal - products.iec.ch
Discover our powerful search engine and read freely all the publications previews, graphical symbols and the glossary. With a subscription you will always have access to up to date content tailored to your needs.

Electropedia - www.electropedia.org
The world's leading online dictionary on electrotechnology, containing more than 22 500 terminological entries in English and French, with equivalent terms in 25 additional languages. Also known as the International Electrotechnical Vocabulary (IEV) online.

A propos de l'IEC
La Commission Electrotechnique Internationale (IEC) est la première organisation mondiale qui élabore et publie des Normes internationales pour tout ce qui a trait à l'électricité, à l'électronique et aux technologies apparentées.

A propos des publications IEC
Le contenu technique des publications IEC est constamment revu. Veuillez vous assurer que vous possédez l'édition la plus récente, un corrigendum ou amendement peut avoir été publié.

Recherche de publications IEC - webstore.iec.ch/advsearchform
La recherche avancée permet de trouver des publications IEC en utilisant différents critères (numéro de référence, texte, comité d'études, …). Elle donne aussi des informations sur les projets et les publications remplacées ou retirées.

IEC Just Published - webstore.iec.ch/justpublished
Restez informé sur les nouvelles publications IEC. Just Published détaille les nouvelles publications parues. Disponible en ligne et une fois par mois par email.

Service Clients - webstore.iec.ch/csc
Si vous désirez nous donner des commentaires sur cette publication ou si vous avez des questions contactez-nous: sales@iec.ch.

IEC Products & Services Portal - products.iec.ch
Découvrez notre puissant moteur de recherche et consultez gratuitement tous les aperçus des publications, symboles graphiques et le glossaire. Avec un abonnement, vous aurez toujours accès à un contenu à jour adapté à vos besoins.

Electropedia - www.electropedia.org
Le premier dictionnaire d'électrotechnologie en ligne au monde, avec plus de 22 500 articles terminologiques en anglais et en français, ainsi que les termes équivalents dans 25 langues additionnelles. Egalement appelé Vocabulaire Electrotechnique International (IEV) en ligne.

AVA Documents
Document Sharing Hub

Full document details: IEC 62813 2025

IEC 62813

Edition 2.0 2025-01

INTERNATIONAL STANDARD

NORME INTERNATIONALE

Lithium-ion capacitors for use in electric and electronic equipment – Test methods for electrical characteristics

Condensateurs au lithium-ion destinés à être utilisés dans les équipements électriques et électroniques – Méthodes d'essai relatives aux caractéristiques électriques

INTERNATIONAL
ELECTROTECHNICAL
COMMISSION

COMMISSION
ELECTROTECHNIQUE
INTERNATIONALE

ICS 31.060.99

ISBN 978-2-8327-0137-9

Warning! Make sure that you obtained this publication from an authorized distributor.
Attention! Veuillez vous assurer que vous avez obtenu cette publication via un distributeur agréé.

® Registered trademark of the International Electrotechnical Commission
Marque déposée de la Commission Electrotechnique Internationale

Documents
Document Sharing Hub

Full document details: IEC 62813 2025

CONTENTS

FOREWORD 3
1 Scope 5
2 Normative references 5
3 Terms and definitions 5
4 Test methods 8
4.1 Test requirements 8
4.1.1 Standard atmospheric conditions for tests 8
4.1.2 Standard atmospheric conditions for measurements 8
4.1.3 Pre-conditioning 8
4.2 Measurement 8
4.2.1 Capacitance, discharge accumulated electric energy, and internal resistance 8
4.2.2 Measurement for voltage maintenance rate 11
4.3 Calculation 13
4.3.1 Calculation of capacitance and discharge accumulated electric energy 13
4.3.2 Calculation of internal resistance 14
4.3.3 Calculation of voltage maintenance rate 15
Annex A (informative) Endurance test (continuous application of rated voltage at high temperature) 16
A.1 General 16
A.2 Test procedure 16
A.2.1 Test conditions 16
A.2.2 Test procedure 16
A.2.3 Requirements 16
Annex B (informative) Calculation of the measuring currents based on the propagated error 18
B.1 General 18
B.2 Measurement propagated error and measuring currents 18
Annex C (informative) Procedures for defining the measuring current of LIC with uncertain nominal internal resistance 21
C.1 General 21
C.2 Defining procedures of measuring current for LIC 21
Bibliography 22

Figure 1 – Basic circuit for measuring capacitance, discharge accumulated electric energy, and internal resistance 9
Figure 2 – Voltage profile for measuring capacitance, discharge accumulated electric energy, and internal resistance 11
Figure 3 – Basic circuit for measuring the voltage maintenance rate 12
Figure 4 – Voltage profile for measuring voltage maintenance rate 13
Figure C.1 – Flowchart of current setting procedures 21

Documents
Document Sharing Hub
Full document details: IEC 62813 2025

INTERNATIONAL ELECTROTECHNICAL COMMISSION

LITHIUM-ION CAPACITORS FOR USE IN ELECTRIC AND ELECTRONIC EQUIPMENT – TEST METHODS FOR ELECTRICAL CHARACTERISTICS

FOREWORD

1) The International Electrotechnical Commission (IEC) is a worldwide organization for standardization comprising all national electrotechnical committees (IEC National Committees). The object of IEC is to promote international co-operation on all questions concerning standardization in the electrical and electronic fields. To this end and in addition to other activities, IEC publishes International Standards, Technical Specifications, Technical Reports, Publicly Available Specifications (PAS) and Guides (hereafter referred to as "IEC Publication(s)"). Their preparation is entrusted to technical committees; any IEC National Committee interested in the subject dealt with may participate in this preparatory work. International, governmental and non-governmental organizations liaising with the IEC also participate in this preparation. IEC collaborates closely with the International Organization for Standardization (ISO) in accordance with conditions determined by agreement between the two organizations.
2) The formal decisions or agreements of IEC on technical matters express, as nearly as possible, an international consensus of opinion on the relevant subjects since each technical committee has representation from all interested IEC National Committees.
3) IEC Publications have the form of recommendations for international use and are accepted by IEC National Committees in that sense. While all reasonable efforts are made to ensure that the technical content of IEC Publications is accurate, IEC cannot be held responsible for the way in which they are used or for any misinterpretation by any end user.
4) In order to promote international uniformity, IEC National Committees undertake to apply IEC Publications transparently to the maximum extent possible in their national and regional publications. Any divergence between any IEC Publication and the corresponding national or regional publication shall be clearly indicated in the latter.
5) IEC itself does not provide any attestation of conformity. Independent certification bodies provide conformity assessment services and, in some areas, access to IEC marks of conformity. IEC is not responsible for any services carried out by independent certification bodies.
6) All users should ensure that they have the latest edition of this publication.
7) No liability shall attach to IEC or its directors, employees, servants or agents including individual experts and members of its technical committees and IEC National Committees for any personal injury, property damage or other damage of any nature whatsoever, whether direct or indirect, or for costs (including legal fees) and expenses arising out of the publication, use of, or reliance upon, this IEC Publication or any other IEC Publications.
8) Attention is drawn to the Normative references cited in this publication. Use of the referenced publications is indispensable for the correct application of this publication.
9) IEC draws attention to the possibility that the implementation of this document may involve the use of (a) patent(s). IEC takes no position concerning the evidence, validity or applicability of any claimed patent rights in respect thereof. As of the date of publication of this document, IEC had not received notice of (a) patent(s), which may be required to implement this document. However, implementers are cautioned that this may not represent the latest information, which may be obtained from the patent database available at https://patents.iec.ch. IEC shall not be held responsible for identifying any or all such patent rights.

IEC 62813 has been prepared by IEC technical committee 40: Capacitors and resistors for electronic equipment. It is an International Standard.

This second edition cancels and replaces the first edition published in 2015. This edition constitutes a technical revision.

This edition includes the following significant technical changes with respect to the previous edition:

a) The document has been restructured to comply with the ISO/IEC Directives, Part 2.

Documents
Document Sharing Hub

Full document details: IEC 62813 2025

The text of this International Standard is based on the following documents:

Draft	Report on voting
40/3178/FDIS	40/3195/RVD

Full information on the voting for its approval can be found in the report on voting indicated in the above table.

The language used for the development of this International Standard is English.

This document was drafted in accordance with ISO/IEC Directives, Part 2, and developed in accordance with ISO/IEC Directives, Part 1 and ISO/IEC Directives, IEC Supplement, available at www.iec.ch/members_experts/refdocs. The main document types developed by IEC are described in greater detail at www.iec.ch/publications.

The committee has decided that the contents of this document will remain unchanged until the stability date indicated on the IEC website under webstore.iec.ch in the data related to the specific document. At this date, the document will be

- reconfirmed,
- withdrawn, or
- revised.

Documents
Document Sharing Hub

Full document details: IEC 62813 2025

LITHIUM-ION CAPACITORS FOR USE IN ELECTRIC AND ELECTRONIC EQUIPMENT – TEST METHODS FOR ELECTRICAL CHARACTERISTICS

1 Scope

This International Standard specifies the electrical characteristics (capacitance, internal resistance, discharge accumulated electric energy, and voltage maintenance rate) test methods of lithium-ion capacitors (LIC) for use in electric and electronic equipment.

2 Normative references

The following documents are referred to in the text in such a way that some or all of their content constitutes requirements of this document. For dated references, only the edition cited applies. For undated references, the latest edition of the referenced document (including any amendments) applies.

IEC 60068-1:2013, *Environmental testing – Part 1: General and guidance*

3 Terms and definitions

For the purposes of this document, the following terms and definitions apply.

ISO and IEC maintain terminology databases for use in standardization at the following addresses:

- IEC Electropedia: available at https://www.electropedia.org/
- ISO Online browsing platform: available at https://www.iso.org/obp

3.1
upper category temperature
highest ambient temperature including internal heating in which a LIC is designed to operate continuously

[SOURCE: IEC 61881-3:2012, 3.17, modified – The note to entry has been deleted.]

3.2
rated voltage
U_R
maximum direct current (DC) voltage that may be applied continuously for a certain time under the *upper category temperature* (3.1) to a LIC so that it can exhibit specified demand characteristics

Note 1 to entry: This voltage is the setting voltage in LIC design.

Note 2 to entry: The endurance test using the rated voltage is described in Annex A.

[SOURCE: IEC 62576:2018, 3.20, modified – The word "capacitor" has been replaced by "LIC".]

Documents
Document Sharing Hub

Full document details: IEC 62813 2025

3.3
rated lower limit voltage
U_L
minimum DC voltage such that a LIC can exhibit specified demand characteristics

Note 1 to entry: The rated lower limit voltage is designated by manufacturer.

3.4
charging current
current required to charge a LIC

3.5
discharging current
current required to discharge a LIC

3.6
discharge accumulated electric energy
amount of discharged energy of a LIC accumulated from the *discharge start time* (3.7) to the *time to reach rated lower limit voltage* (3.10)

3.7
discharge start time
T_0
time when discharge of a LIC starts

Note 1 to entry: It is the basis time for the *calculation start time* (3.8) and the *time to reach rated lower limit voltage* (3.10).

3.8
calculation start time
T_1
time at a selected start point used to calculate the *capacitance* (3.12) and the *internal resistance* (3.14) during discharge of a LIC

Note 1 to entry: The calculation start time is expressed as elapsed time since the *discharge start time* (3.7).

3.9
calculation end time
T_2
time at a selected end point used to calculate the *capacitance* (3.12) and the *internal resistance* (3.14) during discharge of a LIC

Note 1 to entry: The calculation end time is expressed as elapsed time since the *discharge start time* (3.7).

3.10
time to reach rated lower limit voltage
T_L
time when the voltage reaches the *rated lower limit voltage* (3.3) during discharge of a LIC

Note 1 to entry: The time to reach rated lower limit voltage is expressed as elapsed time since the *discharge start time* (3.7).

3.11
instant drop voltage at discharge
U_0
voltage at the *discharge start time* (3.7) of a least-squares regression line over the time period from the *calculation start time* (3.8) to the *calculation end time* (3.9) for the voltage drop characteristic of a LIC during discharge

Documents
Document Sharing Hub
Full document details: IEC 62813 2025

3.12
capacitance
ability of a LIC to store electrical charge (F)

[SOURCE: IEC 62576:2018, 3.5, modified – The word “capacitor” has been replaced by “LIC”.]

3.13
nominal capacitance
C_N
designated capacitance value usually indicated on a LIC

[SOURCE: IEC 62391-1:2022, 3.21, modified – The words "on the capacitor" have been replaced by "on a LIC".]

3.14
internal resistance
resistance component in an equivalent series circuit of capacitance and resistance of a LIC

[SOURCE: IEC 62391-1:2022, 3.10, modified – The words "resistance of a capacitor" have been replaced by "resistance of a LIC".]

3.15
nominal internal resistance
R_N
nominal value of the internal resistance to be used in design and measurement condition setting, generally at the ambient temperature

[SOURCE: IEC 62576:2018, 3.17, modified – The information given between parentheses "(R_N)" and "(Ω)" have been removed from the descriptive statement.]

3.16
constant voltage charging
charging during which the voltage is maintained at a constant value regardless of charge current or temperature

[SOURCE: IEC 62576:2018, 3.9]

3.17
constant current charging
method of charging a LIC with specified constant current

3.18
constant current discharging
method of discharging a LIC with specified constant current

3.19
pre-conditioning
charging and discharging and storage of a LIC under specified ambient conditions (temperature, humidity, and pressure) before testing

Note 1 to entry: Generally, pre-conditioning implies that the LIC is stored until its inner temperature attains thermal equilibrium with the surrounding temperature, before its electrical characteristics are measured.

[SOURCE: IEC 62576:2018, 3.19, modified – The word "capacitor" has been replaced by "LIC" in the definition and in the note.]]

Documents
Document Sharing Hub
Full document details: IEC 62813 2025

3.20
voltage maintenance rate
A
ratio of the voltage at the open-ended terminals to the charge voltage after a specified time period subsequent to the charging of a LIC

[SOURCE: IEC 62576:2018, 3.25, modified – The word "capacitor" has been replaced by "LIC".]

4 Test methods

4.1 Test requirements

4.1.1 Standard atmospheric conditions for tests

Unless otherwise specified in the detail specification, all tests shall be made under standard atmospheric conditions for tests as given in IEC 60068-1:2013, 4.3:

– temperature: 15 °C to 35 °C;
– relative humidity: 25 % to 75 %;
– air pressure: 86 kPa to 106 kPa.

If any question about determining measurement value arises under the atmospheric conditions or if it is requested, 4.1.2 is applied.

If it is difficult to perform measurements under the standard atmospheric conditions and if no question about determining measurement value arises, tests and measurements may be performed under other conditions than the standard atmospheric conditions.

4.1.2 Standard atmospheric conditions for measurements

Unless otherwise specified in the detail specification, all measurements shall be made under standard atmospheric conditions for testing as given in IEC 60068-1:2013, 4.3, with the following details:

– temperature: 25 °C ± 2 °C;
– relative humidity: 45 % to 55 %;
– air pressure: 86 kPa to 106 kPa.

4.1.3 Pre-conditioning

Unless otherwise specified in the detail specification, the LIC shall be charged with a constant current and constant voltage power supply, the voltage of which is set to the rated voltage, for 30 min then discharged to the lower limit voltage with a proper discharging device.

4.2 Measurement

4.2.1 Capacitance, discharge accumulated electric energy, and internal resistance

4.2.1.1 Test equipment

The test equipment shall be capable of constant current charging, constant voltage charging, and constant current discharging with current specified in 4.2.1.2, and continuous measurement of current and voltage at sampling interval specified in 4.2.1.2 f) 1). The basic circuit is shown in Figure 1.

a) DC power supply

The DC power supply shall be capable of charging the LIC at constant current specified in 4.2.1.2 c) and constant voltage specified in 4.2.1.2 d) for duration specified in 4.2.1.2 d).

AVA Documents Document Sharing Hub

Full document details: IEC 62813 2025

b) Constant current load

The constant current load shall be capable of discharging the LIC at constant current specified in 4.2.1.2 e) and its current rise time at discharge start shall be 50 ms or less.

c) DC voltage recorder

The DC voltage recorder shall be capable of conducting measurements and recording with 1 mV resolution and sampling interval of 100 ms.

d) Changeover switch

The changeover switch shall not cause chattering which may affect the result of voltage-time recording.

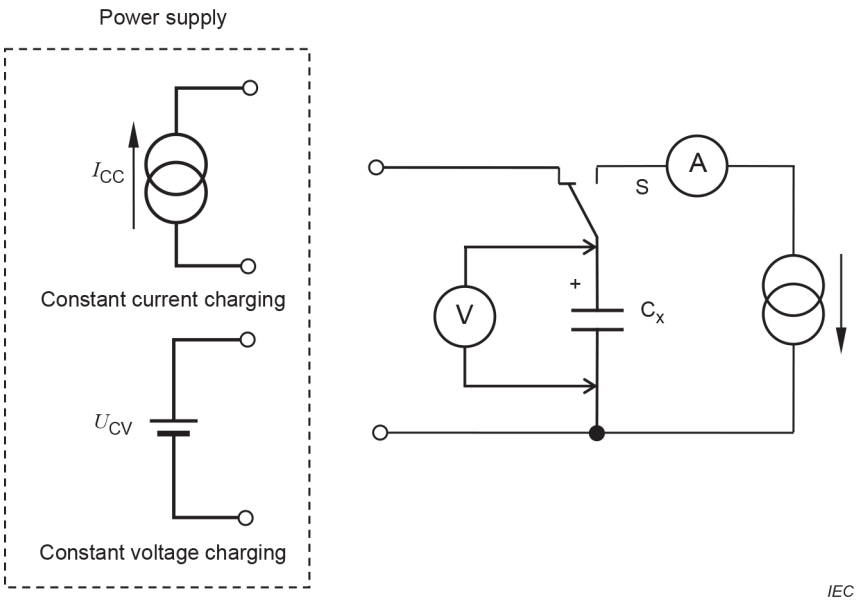

Key

I_{CC} constant-current

U_{CV} constant-voltage

(A) DC ammeter

(V) DC voltage recorder

S changeover switch

C_x LIC under test

constant current power supply

constant voltage power supply

constant current load

Figure 1 – Basic circuit for measuring capacitance, discharge accumulated electric energy, and internal resistance

4.2.1.2 Measurement procedure and conditions

The measurement procedure and conditions shall be as follows. The voltage profile between the LIC terminals in the measurement shall be as shown in Figure 2.

a) Before setting sample

The LIC shall be left in the standard atmospheric condition as defined in 4.1.1 for 2 h to 6 h.

b) Sample setting

Connect the LIC terminals to the circuit.

Documents
Document Sharing Hub
Full document details: IEC 62813 2025

c) Constant current charging

Charge the LIC to the rated voltage U_R with DC power supply specified in 4.2.1.1 and with specified current I calculated by Formula (1).

$$I = \frac{1}{30R_N}\sqrt{1+\frac{27}{5C_N R_N+1}-\frac{26}{10C_N R_N+1}} \quad (1)$$

where

I is the charging current (A). It is also used to specify the discharging current;

R_N is the nominal internal resistance of the LIC under test (Ω);

C_N is the nominal capacitance of the LIC under test (F).

NOTE The current calculated by Formula (1) is assumed as the current by which the resultant measurement error of the internal resistance is limited within ± 3 % (see Annex B). When the nominal value of internal resistance is uncertain, the current for the measurement can be set according to the advisable procedures described in Annex C.

d) Constant voltage charging

When voltage between the LIC terminals is reached to the rated voltage U_R, switch to constant voltage charging then apply the rated voltage U_R for 30 min.

e) Constant current discharging

Turn changeover switch from the power supply to the constant current load and discharge with the specified constant current as follows:

1) For internal resistance measurement, set the discharge current: I calculated by Formula (1).

2) For discharge accumulated electric energy and capacitance measurement, set the discharge current: I_{cap}, tenth of I calculated by Formula (1).

f) Test, measurement and recording

Measure and record the voltage-time characteristics between the LIC terminals:

1) Sampling and recording interval ΔT_s shall be set to 0,1 s.

2) Sampling and recording shall be conducted continuously from charge start time to the time to reach rated lower limit voltage U_L.

Documents
Document Sharing Hub
Full document details: IEC 62813 2025

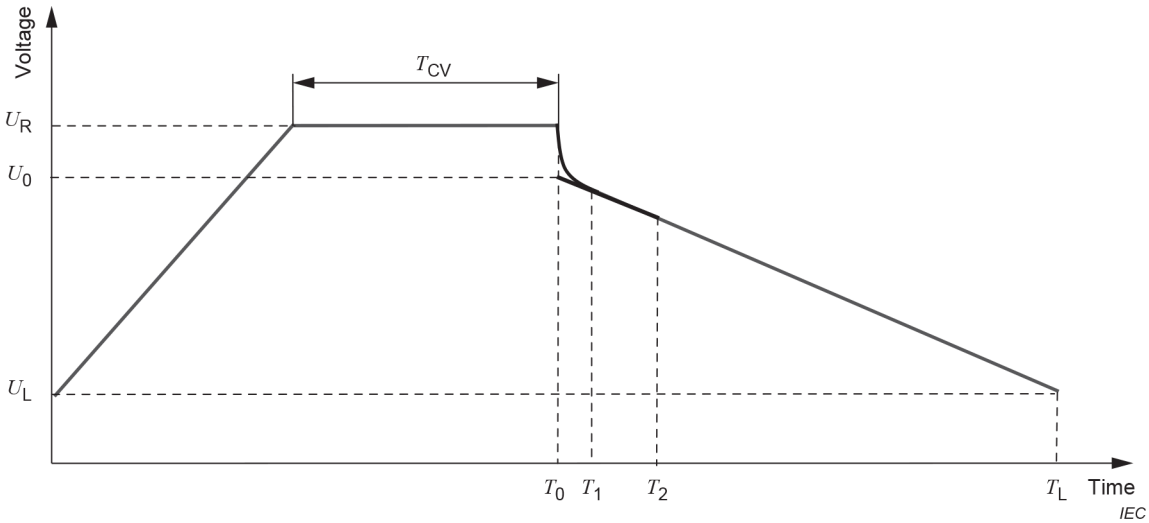

Key

T_0 discharge start time (s)

T_1 calculation start time, which is set to $C_N R_N$ (s)

T_2 calculation end time, which is set to 2 $C_N R_N$ (s)

T_L time to reach rated lower limit voltage (s)

T_{CV} duration of constant voltage charging (s)

U_R rated voltage (V)

U_L rated lower limit voltage (V)

U_0 instant drop voltage at discharge (V)

Figure 2 – Voltage profile for measuring capacitance, discharge accumulated electric energy, and internal resistance

4.2.2 Measurement for voltage maintenance rate

4.2.2.1 Test equipment

The basic circuit is shown in Figure 3. The DC voltmeters V_1 and V_2 shall have a resolution of 5 mV or less for voltage measurement. The input impedance shall be sufficiently high so that measurement errors are negligible.

Documents
Document Sharing Hub
Full document details: IEC 62813 2025

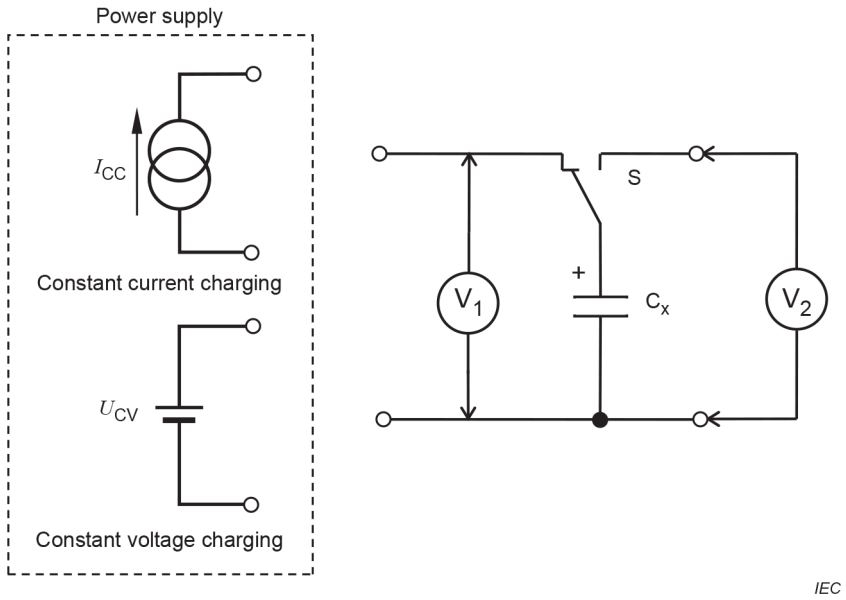

Key

V_2 V_1 DC voltmeter

Figure 3 – Basic circuit for measuring the voltage maintenance rate

4.2.2.2 Measurement procedure and conditions

The measurement procedure and conditions shall be as follows. The voltage profile between the LIC terminals in the measurement shall be as shown in Figure 4.

a) Before setting sample

The LIC shall be left in the standard atmospheric condition as defined in 4.1.1 for 2 h to 6 h.

b) Sample setting

Connect the LIC terminals to the circuit.

c) Constant current charging

Charge the LIC to the rated voltage U_R with DC power supply specified in 4.2.1.1 and with specified current I calculated by Formula (1).

d) Constant voltage charging

When voltage between the LIC terminals is reached to the rated voltage U_R, switch to the constant voltage charging then apply the rated voltage U_R for 24 h.

e) Terminal opening

Disconnect the LIC terminals from the circuit.

f) Measurement

Measure voltage between the LIC terminals when the leaving time after terminal opening T_{OC} is 72 h (see Figure 4).

Documents
Document Sharing Hub
Full document details: IEC 62813 2025

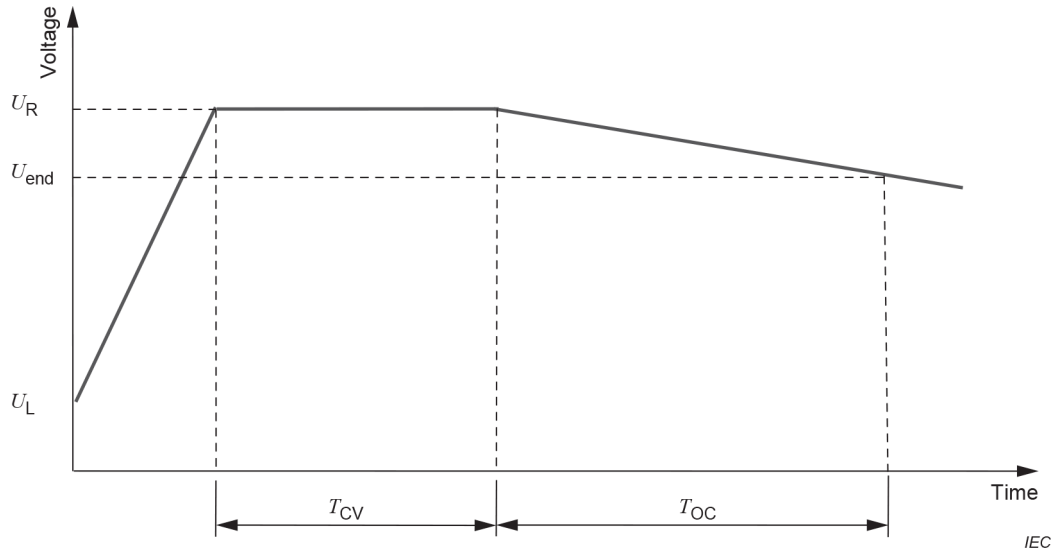

Key

T_{oc} duration of measurement, which is set to 72 h (h)

U_{end} voltage between the LIC terminals at T_{oc} (V)

Figure 4 – Voltage profile for measuring voltage maintenance rate

4.3 Calculation

4.3.1 Calculation of capacitance and discharge accumulated electric energy

The capacitance and the discharge accumulated electric energy are calculated by using the energy conversion method described in a). When agreed between manufacturer and customer, simplified method described in b) can be used instead.

a) Calculation of capacitance and accumulated electric energy by energy conversion method

The capacitance C_x shall be calculated by Formula (2) and the discharge accumulated electric energy W shall be calculated by Formula (3) (see Figure 2).

$$C_x = \frac{2W}{U_0^2 - U_L^2} \tag{2}$$

$$W = \frac{I_{cap}\Delta T_s}{2}\sum_{k=0}^{n-1}\left(V_{k+1} + V_k\right) \tag{3}$$

where

C_x is the capacitance of the LIC (F) ;

W is the discharge accumulated electric energy, which is time integral of the electric power on all sampling points from discharge start sampling point (k = 0) to discharge end sampling point (k = n);

U_0 is the instant drop voltage at discharge (V);

U_L is the rated lower limit voltage (V);

I_{cap} is the discharge current (A): tenth of I calculated by Formula (1);

ΔT_s is the sampling and recording interval (s): set to 0,1 s;

Documents
Document Sharing Hub
Full document details: IEC 62813 2025