IEC 62830-1

Edition 1.0 2017-03

INTERNATIONAL STANDARD

NORME INTERNATIONALE

colour inside

Semiconductor devices – Semiconductor devices for energy harvesting and generation –
Part 1: Vibration based piezoelectric energy harvesting

Dispositifs à semiconducteurs – Dispositifs à semiconducteurs pour récupération et production d'énergie –
Partie 1: Récupération d'énergie piézoélectrique basée sur des vibrations

IEC 62830-1:2017-03(en-fr)

Documents
Document Sharing Hub

Full document details: IEC 62830-1 2017

THIS PUBLICATION IS COPYRIGHT PROTECTED

Copyright © 2017 IEC, Geneva, Switzerland

All rights reserved. Unless otherwise specified, no part of this publication may be reproduced or utilized in any form or by any means, electronic or mechanical, including photocopying and microfilm, without permission in writing from either IEC or IEC's member National Committee in the country of the requester. If you have any questions about IEC copyright or have an enquiry about obtaining additional rights to this publication, please contact the address below or your local IEC member National Committee for further information.

Droits de reproduction réservés. Sauf indication contraire, aucune partie de cette publication ne peut être reproduite ni utilisée sous quelque forme que ce soit et par aucun procédé, électronique ou mécanique, y compris la photocopie et les microfilms, sans l'accord écrit de l'IEC ou du Comité national de l'IEC du pays du demandeur. Si vous avez des questions sur le copyright de l'IEC ou si vous désirez obtenir des droits supplémentaires sur cette publication, utilisez les coordonnées ci-après ou contactez le Comité national de l'IEC de votre pays de résidence.

IEC Central Office
3, rue de Varembé
CH-1211 Geneva 20
Switzerland

Tel.: +41 22 919 02 11
Fax: +41 22 919 03 00
info@iec.ch
www.iec.ch

About the IEC
The International Electrotechnical Commission (IEC) is the leading global organization that prepares and publishes International Standards for all electrical, electronic and related technologies.

About IEC publications
The technical content of IEC publications is kept under constant review by the IEC. Please make sure that you have the latest edition, a corrigenda or an amendment might have been published.

IEC Catalogue - webstore.iec.ch/catalogue
The stand-alone application for consulting the entire bibliographical information on IEC International Standards, Technical Specifications, Technical Reports and other documents. Available for PC, Mac OS, Android Tablets and iPad.

IEC publications search - www.iec.ch/searchpub
The advanced search enables to find IEC publications by a variety of criteria (reference number, text, technical committee,…). It also gives information on projects, replaced and withdrawn publications.

IEC Just Published - webstore.iec.ch/justpublished
Stay up to date on all new IEC publications. Just Published details all new publications released. Available online and also once a month by email.

Electropedia - www.electropedia.org
The world's leading online dictionary of electronic and electrical terms containing 20 000 terms and definitions in English and French, with equivalent terms in 16 additional languages. Also known as the International Electrotechnical Vocabulary (IEV) online.

IEC Glossary - std.iec.ch/glossary
65 000 electrotechnical terminology entries in English and French extracted from the Terms and Definitions clause of IEC publications issued since 2002. Some entries have been collected from earlier publications of IEC TC 37, 77, 86 and CISPR.

IEC Customer Service Centre - webstore.iec.ch/csc
If you wish to give us your feedback on this publication or need further assistance, please contact the Customer Service Centre: csc@iec.ch.

A propos de l'IEC
La Commission Electrotechnique Internationale (IEC) est la première organisation mondiale qui élabore et publie des Normes internationales pour tout ce qui a trait à l'électricité, à l'électronique et aux technologies apparentées.

A propos des publications IEC
Le contenu technique des publications IEC est constamment revu. Veuillez vous assurer que vous possédez l'édition la plus récente, un corrigendum ou amendement peut avoir été publié.

Catalogue IEC - webstore.iec.ch/catalogue
Application autonome pour consulter tous les renseignements bibliographiques sur les Normes internationales, Spécifications techniques, Rapports techniques et autres documents de l'IEC. Disponible pour PC, Mac OS, tablettes Android et iPad.

Recherche de publications IEC - www.iec.ch/searchpub

La recherche avancée permet de trouver des publications IEC en utilisant différents critères (numéro de référence, texte, comité d'études,…). Elle donne aussi des informations sur les projets et les publications remplacées ou retirées.

IEC Just Published - webstore.iec.ch/justpublished

Restez informé sur les nouvelles publications IEC. Just Published détaille les nouvelles publications parues. Disponible en ligne et aussi une fois par mois par email.

Electropedia - www.electropedia.org

Le premier dictionnaire en ligne de termes électroniques et électriques. Il contient 20 000 termes et définitions en anglais et en français, ainsi que les termes équivalents dans 16 langues additionnelles. Egalement appelé Vocabulaire Electrotechnique International (IEV) en ligne.

Glossaire IEC - std.iec.ch/glossary
65 000 entrées terminologiques électrotechniques, en anglais et en français, extraites des articles Termes et Définitions des publications IEC parues depuis 2002. Plus certaines entrées antérieures extraites des publications des CE 37, 77, 86 et CISPR de l'IEC.

Service Clients - webstore.iec.ch/csc

Si vous désirez nous donner des commentaires sur cette publication ou si vous avez des questions contactez-nous: csc@iec.ch.

Documents
Document Sharing Hub

Full document details: IEC 62830-1 2017

IEC 62830-1

Edition 1.0 2017-03

INTERNATIONAL STANDARD

NORME INTERNATIONALE

colour inside

Semiconductor devices – Semiconductor devices for energy harvesting and generation –
Part 1: Vibration based piezoelectric energy harvesting

Dispositifs à semiconducteurs – Dispositifs à semiconducteurs pour récupération et production d'énergie –
Partie 1: Récupération d'énergie piézoélectrique basée sur des vibrations

INTERNATIONAL
ELECTROTECHNICAL
COMMISSION

COMMISSION
ELECTROTECHNIQUE
INTERNATIONALE

ICS 31.080.99

ISBN 978-2-8322-0000-0

Warning! Make sure that you obtained this publication from an authorized distributor.
Attention! Veuillez vous assurer que vous avez obtenu cette publication via un distributeur agréé.

® Registered trademark of the International Electrotechnical Commission
Marque déposée de la Commission Electrotechnique Internationale

AVA Documents
Document Sharing Hub

Full document details: IEC 62830-1 2017

CONTENTS

FOREWORD 4
1 Scope 6
2 Normative references 6
3 Terms and definitions 6
3.1 General terms 6
3.2 Piezoelectric transducer 8
3.3 Characteristic parameters 9
4 Essential ratings and characteristic parameters 11
4.1 Identification and type 11
4.2 Limiting values and operating conditions 11
4.3 Additional information 11
5 Test method 12
5.1 General 12
5.2 Electrical characteristics 13
5.2.1 Test procedure 13
5.2.2 Capacitance 14
5.2.3 Resonant frequency 14
5.2.4 Bandwidth 15
5.2.5 Open circuit voltage 15
5.2.6 Output voltage 15
5.2.7 Output current 16
5.2.8 Output power 16
5.2.9 Optimal load impedance 17
5.2.10 Maximum output power 17
5.2.11 Settling time 17
5.3 Mechanical characteristics 18
5.3.1 Test procedure 18
5.3.2 Temperature range 19
5.3.3 Relative humidity range 19
5.3.4 Input vibration 20
Annex A (informative) Piezoelectric mode 21
A.1 d_{33} mode 21
A.2 d_{31} mode 21
Bibliography 22

Figure 1 – A vibration based energy harvester using cantilever with piezoelectric film 7
Figure 2 – Conceptual diagram of a vibration based piezoelectric energy harvester 8
Figure 3 – Equivalent circuit of a vibration based piezoelectric energy harvester 10
Figure 4 – Measurement procedure of vibration based piezoelectric energy harvesters 13
Figure 5 – Test setup for the electrical characteristics of a vibration based piezoelectric energy harvester 14
Figure 6 – Frequency response of a vibration based piezoelectric energy harvester 15
Figure 7 – Output voltage of a vibration based piezoelectric energy harvester at various external loads 16
Figure 8 – Output current of a vibration based piezoelectric energy harvester at various output voltages 16

AVA Documents
Document Sharing Hub
Full document details: IEC 62830-1 2017

Figure 9 – Output power of a vibration based piezoelectric energy harvester at various external loads 17

Figure 10 – Output power and output voltage of a vibration based piezoelectric energy harvester at various input vibrations 17

Figure 11 – Transient response of output voltage of a vibration based piezoelectric energy harvester to excitation 18

Figure 12 – Block diagram of a test setup for evaluating the reliability of a vibration based piezoelectric energy harvester 19

Figure A.1 – Piezoelectric mode of vibrating beam based energy harvester 21

Table 1 – Specification parameters for vibration based piezoelectric energy harvesters 11

Documents
Document Sharing Hub

Full document details: IEC 62830-1 2017

INTERNATIONAL ELECTROTECHNICAL COMMISSION

SEMICONDUCTOR DEVICES – SEMICONDUCTOR DEVICES FOR ENERGY HARVESTING AND GENERATION –

Part 1: Vibration based piezoelectric energy harvesting

FOREWORD

1) The International Electrotechnical Commission (IEC) is a worldwide organization for standardization comprising all national electrotechnical committees (IEC National Committees). The object of IEC is to promote international co-operation on all questions concerning standardization in the electrical and electronic fields. To this end and in addition to other activities, IEC publishes International Standards, Technical Specifications, Technical Reports, Publicly Available Specifications (PAS) and Guides (hereafter referred to as "IEC Publication(s)"). Their preparation is entrusted to technical committees; any IEC National Committee interested in the subject dealt with may participate in this preparatory work. International, governmental and non-governmental organizations liaising with the IEC also participate in this preparation. IEC collaborates closely with the International Organization for Standardization (ISO) in accordance with conditions determined by agreement between the two organizations.
2) The formal decisions or agreements of IEC on technical matters express, as nearly as possible, an international consensus of opinion on the relevant subjects since each technical committee has representation from all interested IEC National Committees.
3) IEC Publications have the form of recommendations for international use and are accepted by IEC National Committees in that sense. While all reasonable efforts are made to ensure that the technical content of IEC Publications is accurate, IEC cannot be held responsible for the way in which they are used or for any misinterpretation by any end user.
4) In order to promote international uniformity, IEC National Committees undertake to apply IEC Publications transparently to the maximum extent possible in their national and regional publications. Any divergence between any IEC Publication and the corresponding national or regional publication shall be clearly indicated in the latter.
5) IEC itself does not provide any attestation of conformity. Independent certification bodies provide conformity assessment services and, in some areas, access to IEC marks of conformity. IEC is not responsible for any services carried out by independent certification bodies.
6) All users should ensure that they have the latest edition of this publication.
7) No liability shall attach to IEC or its directors, employees, servants or agents including individual experts and members of its technical committees and IEC National Committees for any personal injury, property damage or other damage of any nature whatsoever, whether direct or indirect, or for costs (including legal fees) and expenses arising out of the publication, use of, or reliance upon, this IEC Publication or any other IEC Publications.
8) Attention is drawn to the Normative references cited in this publication. Use of the referenced publications is indispensable for the correct application of this publication.
9) Attention is drawn to the possibility that some of the elements of this IEC Publication may be the subject of patent rights. IEC shall not be held responsible for identifying any or all such patent rights.

International Standard IEC 62830-1 has been prepared by IEC technical committee 47: Semiconductor devices.

The text of this standard is based on the following documents:

FDIS	Report on voting
47/2341/FDIS	47/2366/RVD

Full information on the voting for the approval of this International Standard can be found in the report on voting indicated in the above table.

This document has been drafted in accordance with the ISO/IEC Directives, Part 2.

Documents
Document Sharing Hub

Full document details: IEC 62830-1 2017

A list of all parts in the IEC 62830 series, published under the general title *Semiconductor devices – Semiconductor devices for energy harvesting and generation*, can be found on the IEC website.

The committee has decided that the contents of this document will remain unchanged until the stability date indicated on the IEC website under "http://webstore.iec.ch" in the data related to the specific document. At this date, the document will be

- reconfirmed,
- withdrawn,
- replaced by a revised edition, or
- amended.

IMPORTANT – The 'colour inside' logo on the cover page of this publication indicates that it contains colours which are considered to be useful for the correct understanding of its contents. Users should therefore print this document using a colour printer.

Documents
Document Sharing Hub

Full document details: IEC 62830-1 2017

SEMICONDUCTOR DEVICES – SEMICONDUCTOR DEVICES FOR ENERGY HARVESTING AND GENERATION –

Part 1: Vibration based piezoelectric energy harvesting

1 Scope

This part of IEC 62830 defines terms, definitions, symbols, configurations, and test methods that can be used to evaluate and determine the performance characteristics of vibration based piezoelectric energy harvesting devices for practical use. This document is applicable to energy harvesting devices for consumer, general industries, military and aerospace applications without any limitations on device technology and size.

2 Normative references

The following documents are referred to in the text in such a way that some or all of their content constitutes requirements of this document. For dated references, only the edition cited applies. For undated references, the latest edition of the referenced document (including any amendments) applies.

IEC 60749-5:2003, *Semiconductor devices – Mechanical and climatic test methods – Part 5: Steady-state temperature humidity bias life test*

IEC 60749-12:2002, *Semiconductor devices – Mechanical and climatic test methods – Part 12: Vibration, variable frequency*

3 Terms and definitions

For the purposes of this document, the following terms and definitions apply.

ISO and IEC maintain terminological databases for use in standardization at the following addresses:

- IEC Electropedia: available at http://www.electropedia.org/
- ISO Online browsing platform: available at http://www.iso.org/obp

3.1 General terms

3.1.1
vibration
mechanical oscillation

3.1.2
vibration based energy harvester
energy transducer that transforms vibration energy into electric energy

Note 1 to entry: A vibration based energy harvester to convert vibration to electricity by using piezoelectric transducers comprises an inertial mass, spring, and piezoelectric transducer as shown in Figure 1. The piezoelectric transducer contains the two electrodes and a piezoelectric film. The induced vibration introduces the reciprocating motion to the mass. The spring which suspends the mass bends and the bending of the spring introduces tensile and compression of the piezoelectric film. The top and bottom electrodes of the piezoelectric film harvest charges generated from the piezoelectric effect.

Documents
Document Sharing Hub
Full document details: IEC 62830-1 2017

Note 2 to entry: A vibration based energy harvester is represented as shown in Figure 2. It is configured by mass, spring, damping, and piezoelectric transducer. The piezoelectric transducer consumes and transforms the kinetic energy of oscillated proof mass. Therefore, the piezoelectric transducer is generally viewed as damping.

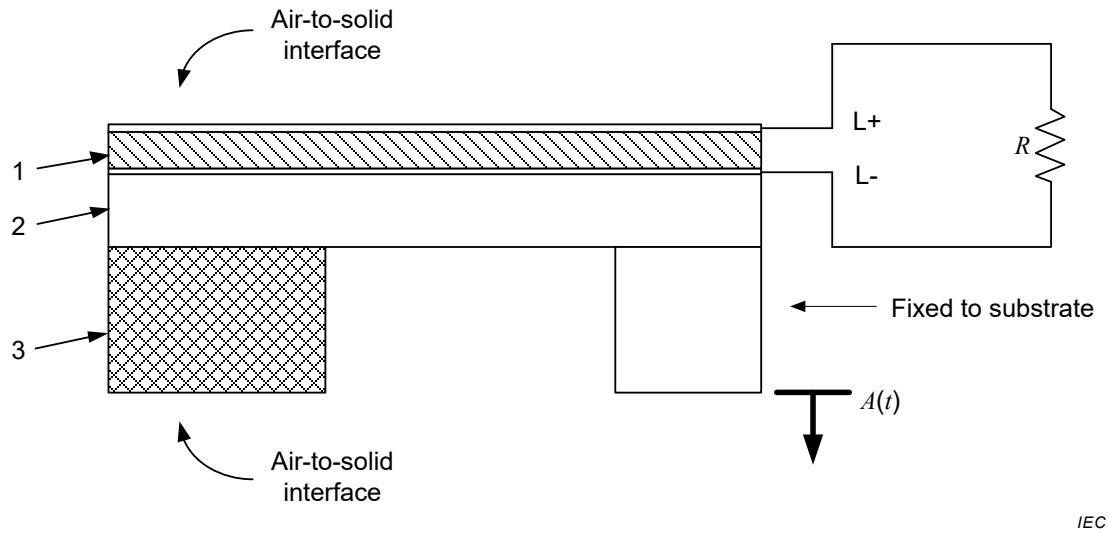

Key

Configuration of energy harvester		**Components to operate an energy harvester**	
1	piezoelectric film which is a body layer of a piezoelectric transducer for energy harvesting	$A(t)$	vibration which is mechanically induced oscillation to fixed substrate to vibrate the mass of the energy harvester
2	spring to couple the induced vibration to the mass by suspending it	R	external load
3	inertial mass to introduce mechanical motion coupling from induced vibration	L+, L-	output of energy harvester

Figure 1 – A vibration based energy harvester using cantilever with piezoelectric film

Documents
Document Sharing Hub
Full document details: IEC 62830-1 2017

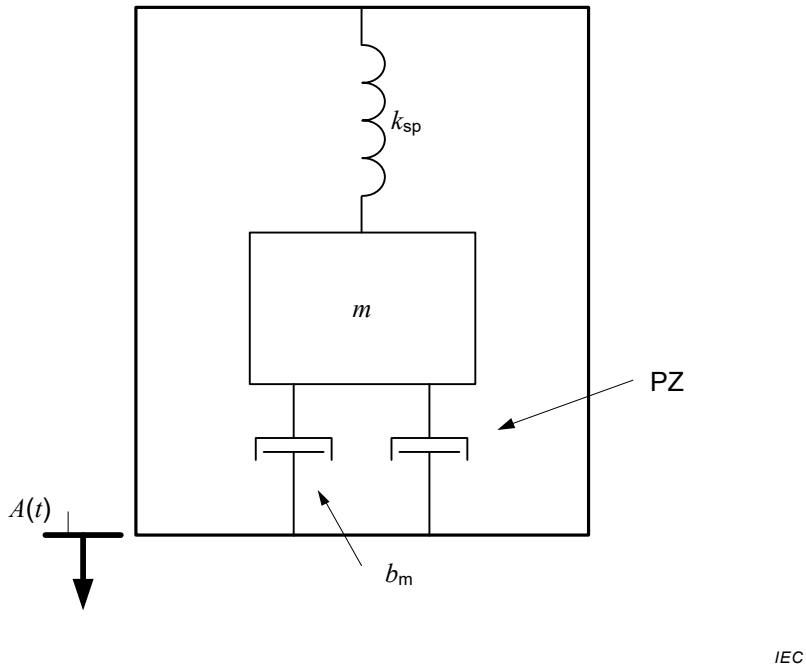

Key

Configuration of energy harvester

k_{sp}	spring constant	m	effective mass
b_m	damping coefficient	PZ	piezoelectric transducer
$A(t)$	input vibration		

Figure 2 – Conceptual diagram of a vibration based piezoelectric energy harvester

3.1.3
mass-spring-damping system
system using effective mass, spring and damper to derive motion

3.1.4
effective mass
m
quantitative measure suspended by a spring to obtain kinetic energy by means of induced acceleration

3.1.5
spring
elastic object to store mechanical energy with spring constant, k_{sp}

3.1.6
parasitic damping
effect that reduces the acceleration of an oscillated object with damping coefficient, b_m

3.2 Piezoelectric transducer

3.2.1
piezoelectric transducer
energy converter to generate electricity from mechanical energy by means of piezoelectric effect

Documents
Document Sharing Hub
Full document details: IEC 62830-1 2017

3.2.2
piezoelectric effect
effect by which a mechanical deformation of piezoelectric material produces a proportional change in the electric polarization of that material

3.2.3
piezoelectric constant
d
quantifying value of the polarization in the piezoelectric material on application of a stress

3.2.4
electromechanical coupling coefficient
k
value that describes the conversion rate of electrical energy to mechanical energy or vice versa

Note 1 to entry: The coefficient is a combination of elastic, dielectric and piezoelectric constants which appears naturally in the expression of a piezoelectric transducer.

$$k = \sqrt{\frac{Ed^2}{\varepsilon}} \tag{1}$$

where

E is Young's modulus,

d is the piezoelectric constant, and

ε is the dielectric constant

3.2.5
capacitance
C_p
capacitance between two electrodes of a piezoelectric transducer

3.3 Characteristic parameters

3.3.1
equivalent circuit
<vibration based piezoelectric energy harvester> electrical circuit which has the same output voltage from induced vibration as a piezoelectric vibration energy harvester in the immediate neighbourhood of resonance

Note 1 to entry: A vibration based piezoelectric energy harvester can be divided into mechanical and electrical parts as shown in Figure 3. The mechanical part consists of series elements m, k_{sp}, b_m, and a transformer. m, k_{sp}, and b_m represent the effective mass, spring constant, damping coefficient, and piezoelectric effect to convert mechanically induced strain to electrical charge density with coupling coefficient k. The electrical part comprises parallel connected C_p, R, and transformer. C_p represents the capacitance between two electrodes of the piezoelectric transducer and R is the external load.

Documents
Document Sharing Hub
Full document details: IEC 62830-1 2017

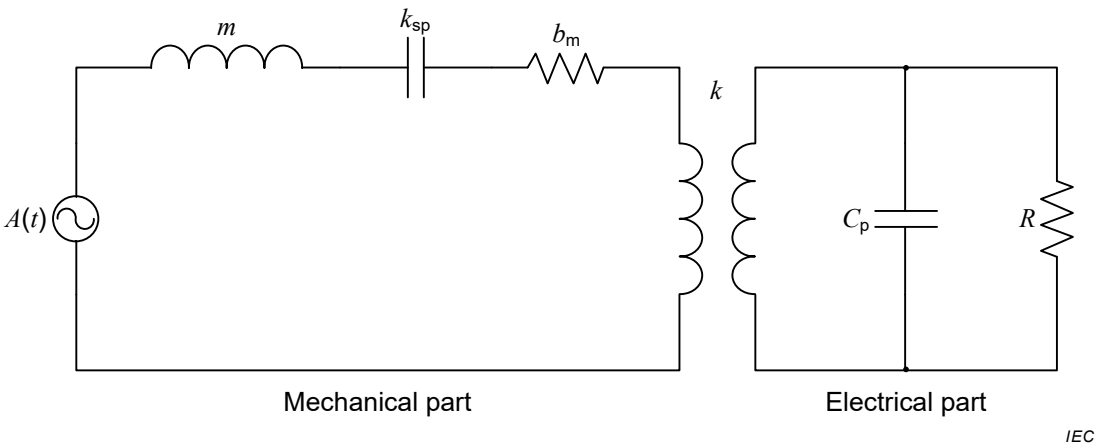

Key

Mechanical part

m	effective mass
k_{sp}	spring constant
b_m	damping coefficient
$A(t)$	induced vibration

Electrical part

C_p	capacitance of piezoelectric transducer
R	external load
k	electromechanical coupling coefficient

Figure 3 – Equivalent circuit of a vibration based piezoelectric energy harvester

3.3.2
resonant frequency
f_o
lowest frequency of the induced vibration of the energy harvester to generate largest output power:

$$f_o = \frac{1}{2\pi}\sqrt{\frac{k_{sp}}{m}} \tag{2}$$

3.3.3
bandwidth
f_{BW}
separation of frequencies between which the output power is equal to or larger than a specified value

3.3.4
open circuit voltage
V
electrical potential difference relative to a reference node of an energy harvester when there is no external load connected to the terminal of the energy harvester

3.3.5
output power
P
electrical power transferred to the external load connected to the terminal of an energy harvester

3.3.6
output current
I
current through the external load connected to the terminal of an energy harvester

AVA Documents Document Sharing Hub
Full document details: IEC 62830-1 2017

3.3.7
optimal load
R_{opt}
specified value of the external load for transferring the largest electrical energy from the energy harvester

3.3.8
settling time
τ
time necessary for the measured output signal to reach a specified value in the transient response

3.3.9
temperature range
range of temperatures as measured on the enclosure over which the energy harvester will not sustain permanent damage though not necessarily functioning within the specified tolerances

3.3.10
input vibration
range of accelerations of induced vibration to the energy harvester as measured on the enclosure over which the energy harvester will not sustain permanent damage though not necessarily functioning within the specified tolerances

4 Essential ratings and characteristic parameters

4.1 Identification and type

The vibration energy harvester shall be clearly and durably marked in the order given below:

a) year and week (or month) of manufacture;

b) manufacturer's name or trademark;

c) terminal identification (optional);

d) serial number;

e) factory identification code (optional).

4.2 Limiting values and operating conditions

Characteristic parameters should be listed as shown in Table 1. The manufacturer shall clearly announce the operating conditions and their limitation for energy harvesting. Limiting value is the maximum induced vibration to ensure the operation of vibration energy harvester for power generation without any damage.

Table 1 – Specification parameters for vibration based piezoelectric energy harvesters

Parameter	Symbol	Min.	Max.	Unit	Measuring conditions
Insert name of characteristic parameters					

4.3 Additional information

Some additional information should be given such as equivalent circuits (resonant frequency, internal impedance, frequency response, output voltage and power, etc.), handling precautions, physical information (outline dimensions, terminals, etc.), accessories,

AVA Documents
Document Sharing Hub
Full document details: IEC 62830-1 2017

installation guide, package information, PCB interface and mounting information, and other information.

5 Test method

5.1 General

Basically, general test procedures for a vibration energy harvester are performed as shown in Figure 4. After the vibration based piezoelectric energy harvester has been mounted on a test fixture, it is measured by using voltage, current, and LCR meters. For measuring and characterizing these devices accurately, ultra-high-impedance meters should be used.

Before connecting the vibration energy harvester to the test fixture, voltage, current, and LCR meters shall be calibrated. After calibration, connect a test cable to the vibration energy harvester test fixture mounted on a vibration exciter. The output voltage or current reading on the display of the meters is carefully taken, together with induced vibration which is measured by the accelerometer.

NOTE After mounting the energy harvester on a vibration exciter, electrical characteristics are measured by using a meter or equivalent equipment. If the measurements are satisfactory, the reliability test for the temperature range with thermal cycling and mechanical failure with various vibrations is performed for commercial use.

Documents
Document Sharing Hub

Full document details: IEC 62830-1 2017

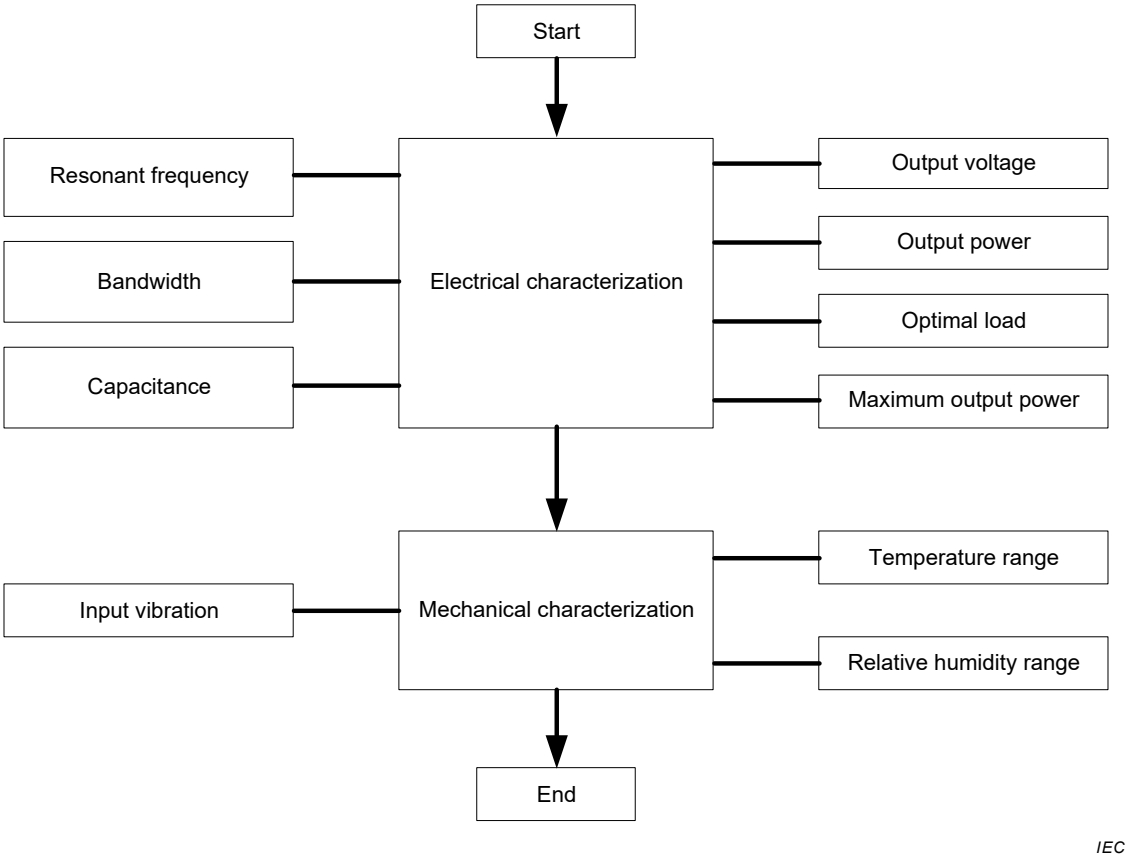

Key

Procedure	Reference subclause	Procedure	Reference subclause
Start		Optimal load	**3.3.7 and 5.2.9**
Electrical characterization		Maximum output power	**5.2.10**
Resonant frequency	**3.3.2 and 5.2.3**	Mechanical characterization	
Bandwidth	**3.3.3 and 5.2.4**	Temperature range	**5.3.2**
Capacitance	**3.2.5 and 5.2.2**	Input vibration	**3.3.10 and 5.3.4**
Output voltage	**3.3.4 and 5.2.6**	Relative humidity range	**5.3.3**
Output power	**3.3.5 and 5.2.8**		

Figure 4 – Measurement procedure of vibration based piezoelectric energy harvesters

5.2 Electrical characteristics

5.2.1 Test procedure

Figure 5 shows a test setup for measuring the electrical characteristics of a vibration based piezoelectric energy harvester. To measure the electrical characteristics of vibration based piezoelectric energy harvester, the device shall be mounted on a vibration exciter as shown in Figure 5. When a continuous vibration with specified acceleration is applied to the device, an output voltage or current across an external load is measured.

The following test procedure is performed:

a) A specified vibration is induced to the energy harvester.

Documents
Document Sharing Hub
Full document details: IEC 62830-1 2017