IEC 62841-2-10

Edition 1.0 2017-02

INTERNATIONAL STANDARD

NORME INTERNATIONALE

Electric motor-operated hand-held tools, transportable tools and lawn and garden machinery – Safety – Part 2-10: Particular requirements for hand-held mixers

Outils électroportatifs à moteur, outils portables et machines pour jardins et pelouses – Sécurité – Partie 2-10: Exigences particulières pour les mélangeurs manuels

IEC 62841-2-10:2017-02(en-fr)

Documents
Document Sharing Hub
Full document details: IEC 62841-2-10 2017

THIS PUBLICATION IS COPYRIGHT PROTECTED

Copyright © 2017 IEC, Geneva, Switzerland

All rights reserved. Unless otherwise specified, no part of this publication may be reproduced or utilized in any form or by any means, electronic or mechanical, including photocopying and microfilm, without permission in writing from either IEC or IEC's member National Committee in the country of the requester. If you have any questions about IEC copyright or have an enquiry about obtaining additional rights to this publication, please contact the address below or your local IEC member National Committee for further information.

Droits de reproduction réservés. Sauf indication contraire, aucune partie de cette publication ne peut être reproduite ni utilisée sous quelque forme que ce soit et par aucun procédé, électronique ou mécanique, y compris la photocopie et les microfilms, sans l'accord écrit de l'IEC ou du Comité national de l'IEC du pays du demandeur. Si vous avez des questions sur le copyright de l'IEC ou si vous désirez obtenir des droits supplémentaires sur cette publication, utilisez les coordonnées ci-après ou contactez le Comité national de l'IEC de votre pays de résidence.

IEC Central Office
3, rue de Varembé
CH-1211 Geneva 20
Switzerland

Tel.: +41 22 919 02 11
Fax: +41 22 919 03 00
info@iec.ch
www.iec.ch

About the IEC
The International Electrotechnical Commission (IEC) is the leading global organization that prepares and publishes International Standards for all electrical, electronic and related technologies.

About IEC publications
The technical content of IEC publications is kept under constant review by the IEC. Please make sure that you have the latest edition, a corrigenda or an amendment might have been published.

IEC Catalogue - webstore.iec.ch/catalogue
The stand-alone application for consulting the entire bibliographical information on IEC International Standards, Technical Specifications, Technical Reports and other documents. Available for PC, Mac OS, Android Tablets and iPad.

IEC publications search - www.iec.ch/searchpub
The advanced search enables to find IEC publications by a variety of criteria (reference number, text, technical committee,…). It also gives information on projects, replaced and withdrawn publications.

IEC Just Published - webstore.iec.ch/justpublished
Stay up to date on all new IEC publications. Just Published details all new publications released. Available online and also once a month by email.

Electropedia - www.electropedia.org
The world's leading online dictionary of electronic and electrical terms containing 20 000 terms and definitions in English and French, with equivalent terms in 16 additional languages. Also known as the International Electrotechnical Vocabulary (IEV) online.

IEC Glossary - std.iec.ch/glossary
65 000 electrotechnical terminology entries in English and French extracted from the Terms and Definitions clause of IEC publications issued since 2002. Some entries have been collected from earlier publications of IEC TC 37, 77, 86 and CISPR.

IEC Customer Service Centre - webstore.iec.ch/csc
If you wish to give us your feedback on this publication or need further assistance, please contact the Customer Service Centre: csc@iec.ch.

A propos de l'IEC
La Commission Electrotechnique Internationale (IEC) est la première organisation mondiale qui élabore et publie des Normes internationales pour tout ce qui a trait à l'électricité, à l'électronique et aux technologies apparentées.

A propos des publications IEC
Le contenu technique des publications IEC est constamment revu. Veuillez vous assurer que vous possédez l'édition la plus récente, un corrigendum ou amendement peut avoir été publié.

Catalogue IEC - webstore.iec.ch/catalogue
Application autonome pour consulter tous les renseignements bibliographiques sur les Normes internationales, Spécifications techniques, Rapports techniques et autres documents de l'IEC. Disponible pour PC, Mac OS, tablettes Android et iPad.

Recherche de publications IEC - www.iec.ch/searchpub

La recherche avancée permet de trouver des publications IEC en utilisant différents critères (numéro de référence, texte, comité d'études,…). Elle donne aussi des informations sur les projets et les publications remplacées ou retirées.

IEC Just Published - webstore.iec.ch/justpublished

Restez informé sur les nouvelles publications IEC. Just Published détaille les nouvelles publications parues. Disponible en ligne et aussi une fois par mois par email.

Electropedia - www.electropedia.org

Le premier dictionnaire en ligne de termes électroniques et électriques. Il contient 20 000 termes et définitions en anglais et en français, ainsi que les termes équivalents dans 16 langues additionnelles. Egalement appelé Vocabulaire Electrotechnique International (IEV) en ligne.

Glossaire IEC - std.iec.ch/glossary
65 000 entrées terminologiques électrotechniques, en anglais et en français, extraites des articles Termes et Définitions des publications IEC parues depuis 2002. Plus certaines entrées antérieures extraites des publications des CE 37, 77, 86 et CISPR de l'IEC.

Service Clients - webstore.iec.ch/csc

Si vous désirez nous donner des commentaires sur cette publication ou si vous avez des questions contactez-nous: csc@iec.ch.

Documents
Document Sharing Hub

Full document details: IEC 62841-2-10 2017

IEC 62841-2-10

Edition 1.0 2017-02

INTERNATIONAL STANDARD

NORME INTERNATIONALE

Electric motor-operated hand-held tools, transportable tools and lawn and garden machinery – Safety – Part 2-10: Particular requirements for hand-held mixers

Outils électroportatifs à moteur, outils portables et machines pour jardins et pelouses – Sécurité – Partie 2-10: Exigences particulières pour les mélangeurs manuels

INTERNATIONAL
ELECTROTECHNICAL
COMMISSION

COMMISSION
ELECTROTECHNIQUE
INTERNATIONALE

ICS 25.140.20

ISBN 978-2-8322-3811-0

Warning! Make sure that you obtained this publication from an authorized distributor.
Attention! Veuillez vous assurer que vous avez obtenu cette publication via un distributeur agréé.

® Registered trademark of the International Electrotechnical Commission
Marque déposée de la Commission Electrotechnique Internationale

Documents
Document Sharing Hub

Full document details: IEC 62841-2-10 2017

CONTENTS

FOREWORD 4
1 Scope 6
2 Normative references 6
3 Terms and definitions 6
4 General requirements 6
5 General conditions for the tests 7
6 Radiation, toxicity and similar hazards 7
7 Classification 7
8 Marking and instructions 7
9 Protection against access to live parts 8
10 Starting 8
11 Input and current 8
12 Heating 8
13 Resistance to heat and fire 8
14 Moisture resistance 8
15 Resistance to rusting 8
16 Overload protection of transformers and associated circuits 8
17 Endurance 9
18 Abnormal operation 9
19 Mechanical hazards 9
20 Mechanical strength 10
21 Construction 10
22 Internal wiring 11
23 Components 11
24 Supply connection and external flexible cords 11
25 Terminals for external conductors 11
26 Provision for earthing 11
27 Screws and connections 11
28 Creepage distances, clearances and distances through insulation 11
Annexes 15
Annex I (informative) Measurement of noise and vibration emissions 16
Annex K (normative) Battery tools and battery packs 20
Annex L (normative) Battery tools and battery packs provided with mains connection or non-isolated sources 21
Bibliography 22

Figure 101 – Mixers with various handle and spindle configurations 12
Figure 102 – Moment arm for various handle designs 13
Figure 103 – Clearance between spindles 14
Figure I.101 – Positions of transducers for mixers 17
Figure I.102 – Simulated test mixer basket 18

AVA Documents
Document Sharing Hub

Full document details: IEC 62841-2-10 2017

Figure I.103 – Wheel with unbalance 19

Table 4 – Required performance levels 9

Documents
Document Sharing Hub

Full document details: IEC 62841-2-10 2017

INTERNATIONAL ELECTROTECHNICAL COMMISSION

ELECTRIC MOTOR-OPERATED HAND-HELD TOOLS, TRANSPORTABLE TOOLS AND LAWN AND GARDEN MACHINERY – SAFETY –

Part 2-10: Particular requirements for hand-held mixers

FOREWORD

1) The International Electrotechnical Commission (IEC) is a worldwide organization for standardization comprising all national electrotechnical committees (IEC National Committees). The object of IEC is to promote international co-operation on all questions concerning standardization in the electrical and electronic fields. To this end and in addition to other activities, IEC publishes International Standards, Technical Specifications, Technical Reports, Publicly Available Specifications (PAS) and Guides (hereafter referred to as "IEC Publication(s)"). Their preparation is entrusted to technical committees; any IEC National Committee interested in the subject dealt with may participate in this preparatory work. International, governmental and non-governmental organizations liaising with the IEC also participate in this preparation. IEC collaborates closely with the International Organization for Standardization (ISO) in accordance with conditions determined by agreement between the two organizations.
2) The formal decisions or agreements of IEC on technical matters express, as nearly as possible, an international consensus of opinion on the relevant subjects since each technical committee has representation from all interested IEC National Committees.
3) IEC Publications have the form of recommendations for international use and are accepted by IEC National Committees in that sense. While all reasonable efforts are made to ensure that the technical content of IEC Publications is accurate, IEC cannot be held responsible for the way in which they are used or for any misinterpretation by any end user.
4) In order to promote international uniformity, IEC National Committees undertake to apply IEC Publications transparently to the maximum extent possible in their national and regional publications. Any divergence between any IEC Publication and the corresponding national or regional publication shall be clearly indicated in the latter.
5) IEC itself does not provide any attestation of conformity. Independent certification bodies provide conformity assessment services and, in some areas, access to IEC marks of conformity. IEC is not responsible for any services carried out by independent certification bodies.
6) All users should ensure that they have the latest edition of this publication.
7) No liability shall attach to IEC or its directors, employees, servants or agents including individual experts and members of its technical committees and IEC National Committees for any personal injury, property damage or other damage of any nature whatsoever, whether direct or indirect, or for costs (including legal fees) and expenses arising out of the publication, use of, or reliance upon, this IEC Publication or any other IEC Publications.
8) Attention is drawn to the Normative references cited in this publication. Use of the referenced publications is indispensable for the correct application of this publication.
9) Attention is drawn to the possibility that some of the elements of this IEC Publication may be the subject of patent rights. IEC shall not be held responsible for identifying any or all such patent rights.

International Standard IEC 62841-2-10 has been prepared by IEC technical committee 116: Safety of motor-operated electric tools.

The text of this standard is based on the following documents:

FDIS	Report on voting
116/303/FDIS	116/313/RVD

Full information on the voting for the approval of this standard can be found in the report on voting indicated in the above table.

This publication has been drafted in accordance with the ISO/IEC Directives, Part 2.

Documents
Document Sharing Hub

Full document details: IEC 62841-2-10 2017

This Part 2-10 is to be used in conjunction with the first edition of IEC 62841-1 (2014).

This Part 2-10 supplements or modifies the corresponding clauses in IEC 62841-1, so as to convert it into the IEC standard: Particular requirements for hand-held mixers.

Where a particular subclause of Part 1 is not mentioned in this Part 2-10, that subclause applies as far as relevant. Where this standard states “addition”, “modification” or “replacement”, the relevant text in Part 1 is to be adapted accordingly.

The following print types are used:

– requirements: in roman type;
– *test specifications: in italic type;*
– notes: in small roman type.

The terms defined in Clause 3 are printed in **bold typeface**.

Subclauses, notes and figures which are additional to those in Part 1 are numbered starting from 101.

A list of all parts of the IEC 62841 series, under the general title: *Electric motor-operated hand-held tools, transportable tools and lawn and garden machinery – Safety*, can be found on the IEC website.

The committee has decided that the contents of this publication will remain unchanged until the stability date indicated on the IEC website under "http://webstore.iec.ch" in the data related to the specific publication. At this date, the publication will be

- reconfirmed,
- withdrawn,
- replaced by a revised edition, or
- amended.

NOTE The attention of National Committees is drawn to the fact that equipment manufacturers and testing organizations may need a transitional period following publication of a new, amended or revised IEC publication in which to make products in accordance with the new requirements and to equip themselves for conducting new or revised tests.

It is the recommendation of the committee that the content of this publication be adopted for implementation nationally not earlier than 36 months from the date of publication.

Documents
Document Sharing Hub

Full document details: IEC 62841-2-10 2017

ELECTRIC MOTOR-OPERATED HAND-HELD TOOLS, TRANSPORTABLE TOOLS AND LAWN AND GARDEN MACHINERY – SAFETY –

Part 2-10: Particular requirements for hand-held mixers

1 Scope

This clause of Part 1 is applicable, except as follows:

Addition:

This part of IEC 62841 applies to **mixers**. **Mixers** are not considered to be tools with a **liquid system**.

This standard does not apply to drills and impact drills, even if they can be used as a **mixer**.

NOTE 101 Drills and impact drills are covered by IEC 62841-2-1.

2 Normative references

This clause of Part 1 is applicable.

3 Terms and definitions

This clause of Part 1 is applicable, except as follows:

Addition:

3.101
mixer
tool equipped with either one or more output spindles to mount **mixer baskets** specifically designed to stir liquids or to mix building materials such as concrete, plaster, etc., see Figure 101

Note 1 to entry: The output spindle(s) is/are either threaded, or has/have other coupling means such as a chuck or a hexagonal connector.

Note 2 to entry: **Mixers** are also commonly known as stirrers.

3.102
mixer basket
accessory intended to be used with a **mixer** employing a structure of wings, spirals or helixes for moving the material in the container

Note 1 to entry: **Mixer baskets** are also commonly known as stirrer rods, stirrer baskets, paddles or **mixer** rods.

4 General requirements

This clause of Part 1 is applicable.

Documents
Document Sharing Hub
Full document details: IEC 62841-2-10 2017

5 General conditions for the tests

This clause of Part 1 is applicable, except as follows:

5.17 *Addition:*

The mass of the tool includes the chuck and the auxiliary handle, if any.

6 Radiation, toxicity and similar hazards

This clause of Part 1 is applicable.

7 Classification

This clause of Part 1 is applicable.

8 Marking and instructions

This clause of Part 1 is applicable, except as follows:

8.3 *Addition:*

Mixers with a threaded output spindle shall be marked with the spindle thread size.

Mixers with a hexagonal coupling shall be marked with the width across flats.

For **mixers** with a chuck, the chuck shall be marked with the maximum capacity in mm.

8.14.1 *Addition:*

The additional safety instructions as specified in 8.14.1.101 shall be given. This part may be printed separately from the “General Power Tool Safety Warnings”.

8.14.1.101 Mixer safety instructions

NOTE In the below instructions, on discretion of the manufacturer, the term “**mixer**/mixed/mixing” is replaced by “stirrer/stirred/stirring” and the term “basket” is replaced by another appropriate term such as “rod”.

a) **Hold the tool with both hands at the intended handles.** *Loss of control can cause personal injury.*

b) **Ensure sufficient ventilation when mixing flammable materials to avoid a hazardous atmosphere.** *Developing vapour may be inhaled or be ignited by the sparks the power tool produces.*

c) **Do not mix food.** *Power tools and their accessories are not designed for processing food.*

d) **Keep the cord away from the working area.** *The cord may be entangled by the mixer basket.*

e) **Ensure that the mixing container is placed in a firm and secure position.** *A container that is not properly secured may move unexpectedly.*

f) **Ensure that no liquid splashes against the housing of the power tool.** *Liquid that has penetrated the power tool can cause damage and lead to electric shock.*

g) **Follow the instructions and warnings for the material to be mixed.** *Material to be mixed may be harmful.*

Documents
Document Sharing Hub
Full document details: IEC 62841-2-10 2017

h) **If the power tool falls into the material to be mixed, unplug the tool immediately and have the power tool checked by a qualified repair person.** *Reaching into the bucket with the tool still plugged in can lead to electric shock.*

i) **Do not reach into the mixing container with your hands or insert any other objects into it while mixing.** *Contact with the mixer basket may lead to serious personal injury.*

j) **Start up and run down the tool in the mixing container only.** *The mixer basket may bend or spin in an uncontrolled manner.*

8.14.2 a) *Addition:*

101) Information about which **mixer baskets** can be used with the tool, including their maximum diameter or width, and which extensions can be used.

9 Protection against access to live parts

This clause of Part 1 is applicable.

10 Starting

This clause of Part 1 is applicable.

11 Input and current

This clause of Part 1 is applicable.

12 Heating

This clause of Part 1 is applicable, except as follows:

12.2.1 *Addition:*

The tool is operated continuously for a period of 30 min. The temperature rises are measured at the end of the 30 min.

13 Resistance to heat and fire

This clause of Part 1 is applicable.

14 Moisture resistance

This clause of Part 1 is applicable.

15 Resistance to rusting

This clause of Part 1 is applicable.

16 Overload protection of transformers and associated circuits

This clause of Part 1 is applicable.

Documents
Document Sharing Hub

Full document details: IEC 62841-2-10 2017

17 Endurance

This clause of Part 1 is applicable.

18 Abnormal operation

This clause of Part 1 is applicable, except as follows:

18.8 *Replacement of Table 4:*

Table 4 – Required performance levels

Type and purpose of SCF	Minimum performance level (PL)
Power switch – prevent unwanted switch-on	b
Power switch – provide desired switch-off	a
Any electronic control to pass the test of 18.3	a
Any speed limiting device	Not an **SCF**
Provide desired direction of rotation	Not an **SCF**
Prevent exceeding thermal limits as in Clause 18	a
Prevent self-resetting as required in 23.3	b
Prevent unwanted lock-on of the **power switch** function	a
NOTE In Europe (EN 62841-2-10), the following additional requirement applies: Restart prevention as required by 21.18.1.1	b

19 Mechanical hazards

This clause of Part 1 is applicable, except as follows:

19.1 *Replacement of the first paragraph:*

Moving and other dangerous parts of the tool other than the output spindle and the **mixer basket** shall be so positioned or enclosed to provide adequate protection against personal injury.

19.4 *Replacement:*

Mixers shall be provided with at least two handles.

Compliance is checked by inspection.

19.4.101 The design of the handle(s) shall be such that the operator can control the torque during the operation of the tool.

Compliance is checked by measurement and by calculations as follows:

*The moment arm of each handle (a) is determined as illustrated in Figure 102. The sum of the moment arms of the two handles shall be greater than or equal to the diameter or width of the largest recommended **mixer basket** in accordance with 8.14.2 a) 101). If there are more than two handles, then the worst case configuration in accordance with 8.14.2 b) 6) shall be used, with one of the handles incorporating the **power switch**.*

AVA Documents
Document Sharing Hub

19.6 This subclause is not applicable.

19.101 For **mixers** with more than one spindle, the spindles shall be adequately spaced in order to reduce the risk of entanglement. The minimal clearance *c* between rotating parts in the area of the spindle outputs and along further 100 mm down to the **mixer basket** shall be at least 40 mm, see Figure 103.

Compliance is checked by measurement.

19.102 Chuck keys shall be so designed that they drop easily out of position when released. This requirement does not exclude the provision of clips for holding the key in place when not in use; metal clips fixed to the flexible cable or cord are not allowed.

Compliance is checked by inspection and by manual test.

The key is inserted in the chuck and, without tightening, the tool is turned such that the key is facing down. The key shall fall out.

20 Mechanical strength

This clause of Part 1 is applicable, except as follows:

20.3.1 *Replacement:*

***Mixers** are subjected to three impacts that result from the tool being tipped over to strike a concrete surface. The tool is tipped with the longest **mixer basket**, including extensions, if applicable, recommended by the manufacturer in accordance with 8.14.2 a) 101). If no length of the recommended **mixer basket** is specified, the tip test is performed with a **mixer basket** of 1 m length. The tool is positioned in an upright position with the tip of the **mixer basket** resting on the concrete surface. The tool is then tipped in three different directions on to the concrete surface.*

NOTE Typical **mixer baskets** have a length of 600 mm. Available extensions have a length up to 400 mm.

*If **attachments** are provided as specified in accordance with 8.14.2, the test is repeated with each **attachment** or combination of **attachments** mounted to a separate tool sample.*

20.5 This subclause is not applicable.

21 Construction

This clause of Part 1 is applicable, except as follows:

21.18.1.1 *Addition:*

A **power switch** lock-on device, if any, shall be located such that it can be activated without releasing any hand from the grasping area of the handles required in 19.4. In addition, it shall be so designed that it is not likely to be unintentionally locked on by the user's hand.

*Compliance is checked by inspection or, for a **power switch** with a lock-on device within the grasping area, by the following test.*

*With the **power switch** in the "on" position, the lock-on device shall not be actuated by a straight edge 25 mm long when the straight edge is pushed down on the lock-on device. The straight edge shall be oriented in any direction and be applied to bridge the surface of the lock-on device and any surface adjacent to the lock-on device.*

AVA Documents
Document Sharing Hub

Full document details: IEC 62841-2-10 2017

NOTE In Europe (EN 62841-2-10), the following additional requirement applies:

For **mixers**, either

– the **power switch** shall be a **momentary power switch** without having a locking arrangement in the “on” position

or

– the tool shall not restart after an interruption of the mains supply without releasing and re-actuating the **power switch**.

21.18.1.2 *Addition:*

Mixers are regarded as tools having a risk associated with inadvertent starting.

21.30 This subclause is not applicable.

21.35 This subclause is not applicable.

22 Internal wiring

This clause of Part 1 is applicable.

23 Components

This clause of Part 1 is applicable.

24 Supply connection and external flexible cords

This clause of Part 1 is applicable.

25 Terminals for external conductors

This clause of Part 1 is applicable.

26 Provision for earthing

This clause of Part 1 is applicable.

27 Screws and connections

This clause of Part 1 is applicable.

28 Creepage distances, clearances and distances through insulation

This clause of Part 1 is applicable.

Documents
Document Sharing Hub

Full document details: IEC 62841-2-10 2017

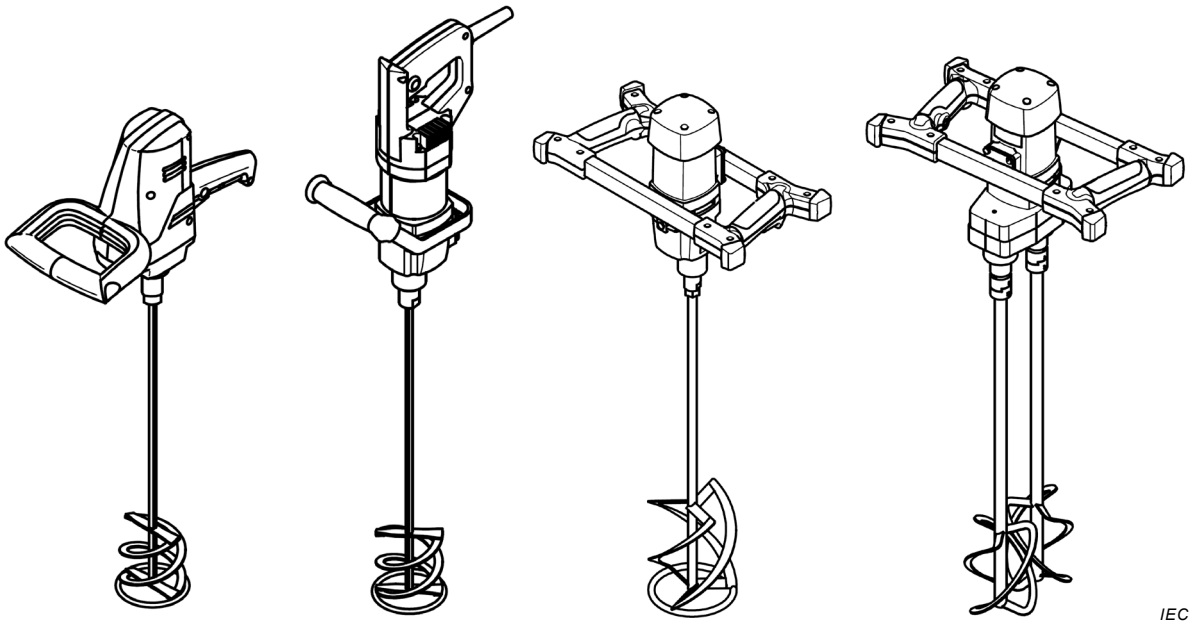

Figure 101 – Mixers with various handle and spindle configurations

Documents
Document Sharing Hub
Full document details: IEC 62841-2-10 2017

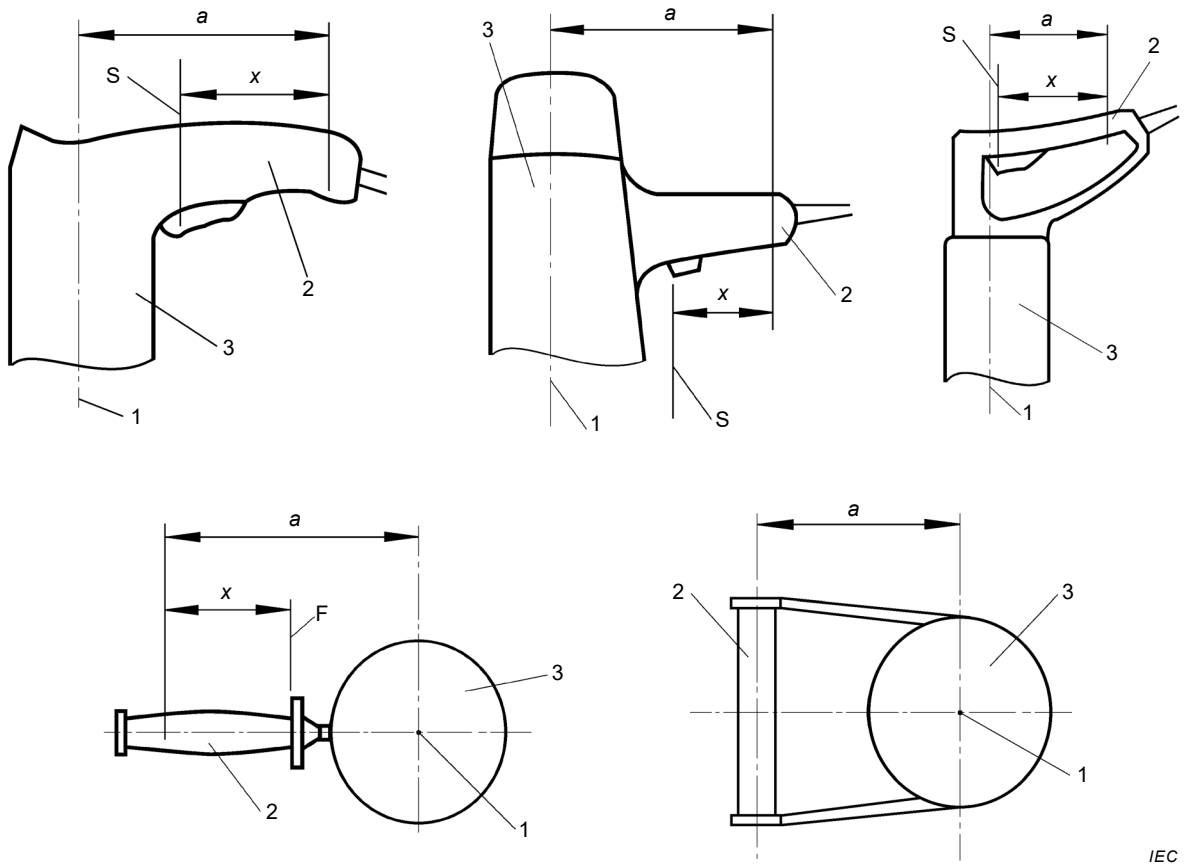

Key

1 axis of the output spindle

2 handle

3 motor housing

S location of the hand on the **power switch** where the operator naturally grasps

x measurement point that is 80 mm or the remaining length of the handle, whichever is less, from S in the direction of where the hand grasps the tool

a moment arm

Figure 102 – Moment arm for various handle designs

Documents
Document Sharing Hub
Full document details: IEC 62841-2-10 2017