IEC 62841-2-11

Edition 1.0 2015-11

INTERNATIONAL STANDARD

NORME INTERNATIONALE

Electric motor-operated hand-held tools, transportable tools and lawn and garden machinery – Safety – Part 2-11: Particular requirements for hand-held reciprocating saws

Outils électroportatifs à moteur, outils portables et machines pour jardins et pelouses – Sécurité – Partie 2-11: Exigences particulières pour les scies alternatives portatives

IEC 62841-2-11:2015-11(en-fr)

Documents
Document Sharing Hub

Full document details: IEC 62841-2-11 2015

THIS PUBLICATION IS COPYRIGHT PROTECTED

Copyright © 2015 IEC, Geneva, Switzerland

All rights reserved. Unless otherwise specified, no part of this publication may be reproduced or utilized in any form or by any means, electronic or mechanical, including photocopying and microfilm, without permission in writing from either IEC or IEC's member National Committee in the country of the requester. If you have any questions about IEC copyright or have an enquiry about obtaining additional rights to this publication, please contact the address below or your local IEC member National Committee for further information.

Droits de reproduction réservés. Sauf indication contraire, aucune partie de cette publication ne peut être reproduite ni utilisée sous quelque forme que ce soit et par aucun procédé, électronique ou mécanique, y compris la photocopie et les microfilms, sans l'accord écrit de l'IEC ou du Comité national de l'IEC du pays du demandeur. Si vous avez des questions sur le copyright de l'IEC ou si vous désirez obtenir des droits supplémentaires sur cette publication, utilisez les coordonnées ci-après ou contactez le Comité national de l'IEC de votre pays de résidence.

IEC Central Office
3, rue de Varembé
CH-1211 Geneva 20
Switzerland

Tel.: +41 22 919 02 11
Fax: +41 22 919 03 00
info@iec.ch
www.iec.ch

About the IEC
The International Electrotechnical Commission (IEC) is the leading global organization that prepares and publishes International Standards for all electrical, electronic and related technologies.

About IEC publications
The technical content of IEC publications is kept under constant review by the IEC. Please make sure that you have the latest edition, a corrigenda or an amendment might have been published.

IEC Catalogue - webstore.iec.ch/catalogue
The stand-alone application for consulting the entire bibliographical information on IEC International Standards, Technical Specifications, Technical Reports and other documents. Available for PC, Mac OS, Android Tablets and iPad.

IEC publications search - www.iec.ch/searchpub
The advanced search enables to find IEC publications by a variety of criteria (reference number, text, technical committee,…). It also gives information on projects, replaced and withdrawn publications.

IEC Just Published - webstore.iec.ch/justpublished
Stay up to date on all new IEC publications. Just Published details all new publications released. Available online and also once a month by email.

Electropedia - www.electropedia.org
The world's leading online dictionary of electronic and electrical terms containing more than 30 000 terms and definitions in English and French, with equivalent terms in 15 additional languages. Also known as the International Electrotechnical Vocabulary (IEV) online.

IEC Glossary - std.iec.ch/glossary
More than 60 000 electrotechnical terminology entries in English and French extracted from the Terms and Definitions clause of IEC publications issued since 2002. Some entries have been collected from earlier publications of IEC TC 37, 77, 86 and CISPR.

IEC Customer Service Centre - webstore.iec.ch/csc
If you wish to give us your feedback on this publication or need further assistance, please contact the Customer Service Centre: csc@iec.ch.

A propos de l'IEC
La Commission Electrotechnique Internationale (IEC) est la première organisation mondiale qui élabore et publie des Normes internationales pour tout ce qui a trait à l'électricité, à l'électronique et aux technologies apparentées.

A propos des publications IEC
Le contenu technique des publications IEC est constamment revu. Veuillez vous assurer que vous possédez l'édition la plus récente, un corrigendum ou amendement peut avoir été publié.

Catalogue IEC - webstore.iec.ch/catalogue
Application autonome pour consulter tous les renseignements bibliographiques sur les Normes internationales, Spécifications techniques, Rapports techniques et autres documents de l'IEC. Disponible pour PC, Mac OS, tablettes Android et iPad.

Recherche de publications IEC - www.iec.ch/searchpub

La recherche avancée permet de trouver des publications IEC en utilisant différents critères (numéro de référence, texte, comité d'études,…). Elle donne aussi des informations sur les projets et les publications remplacées ou retirées.

IEC Just Published - webstore.iec.ch/justpublished

Restez informé sur les nouvelles publications IEC. Just Published détaille les nouvelles publications parues. Disponible en ligne et aussi une fois par mois par email.

Electropedia - www.electropedia.org

Le premier dictionnaire en ligne de termes électroniques et électriques. Il contient plus de 30 000 termes et définitions en anglais et en français, ainsi que les termes équivalents dans 15 langues additionnelles. Egalement appelé Vocabulaire Electrotechnique International (IEV) en ligne.

Glossaire IEC - std.iec.ch/glossary
Plus de 60 000 entrées terminologiques électrotechniques, en anglais et en français, extraites des articles Termes et Définitions des publications IEC parues depuis 2002. Plus certaines entrées antérieures extraites des publications des CE 37, 77, 86 et CISPR de l'IEC.

Service Clients - webstore.iec.ch/csc

Si vous désirez nous donner des commentaires sur cette publication ou si vous avez des questions contactez-nous: csc@iec.ch.

Documents
Document Sharing Hub

Full document details: IEC 62841-2-11 2015

IEC 62841-2-11

Edition 1.0 2015-11

INTERNATIONAL STANDARD

NORME INTERNATIONALE

Electric motor-operated hand-held tools, transportable tools and lawn and garden machinery – Safety – Part 2-11: Particular requirements for hand-held reciprocating saws

Outils électroportatifs à moteur, outils portables et machines pour jardins et pelouses – Sécurité – Partie 2-11: Exigences particulières pour les scies alternatives portatives

INTERNATIONAL
ELECTROTECHNICAL
COMMISSION

COMMISSION
ELECTROTECHNIQUE
INTERNATIONALE

ICS 25.140.20, 25.140.30

ISBN 978-2-8322-2998-9

Warning! Make sure that you obtained this publication from an authorized distributor.
Attention! Veuillez vous assurer que vous avez obtenu cette publication via un distributeur agréé.

® Registered trademark of the International Electrotechnical Commission
Marque déposée de la Commission Electrotechnique Internationale

Documents
Document Sharing Hub

Full document details: IEC 62841-2-11 2015

CONTENTS

FOREWORD 4
1 Scope 6
2 Normative references 6
3 Terms and definitions 6
4 General requirements 6
5 General conditions for the tests 7
6 Radiation, toxicity and similar hazards 7
7 Classification 7
8 Marking and instructions 7
9 Protection against access to live parts 7
10 Starting 7
11 Input and current 8
12 Heating 8
13 Resistance to heat and fire 8
14 Moisture resistance 8
15 Resistance to rusting 8
16 Overload protection of transformers and associated circuits 8
17 Endurance 8
18 Abnormal operation 8
19 Mechanical hazards 8
20 Mechanical strength 9
21 Construction 9
22 Internal wiring 9
23 Components 10
24 Supply connection and external flexible cords 10
25 Terminals for external conductors 10
26 Provision for earthing 10
27 Screws and connections 10
28 Creepage distances, clearances and distances through insulation 10
Annexes 13
Annex I (informative) Measurement of noise and vibration emissions 13
Annex K (normative) Battery tools and battery packs 20
Annex L (normative) Battery tools and battery packs provided with mains connection or non-isolated sources 21
Bibliography 22

Figure 101 – Test probe 11
Figure 102 – Typical designs of jig saws 12
Figure 103 – Typical designs of sabre saws 12
Figure I.101 – Test set-up for jig saws 17
Figure I.102 – Test set-up for sabre saws 18

AVA Documents
Document Sharing Hub

Full document details: IEC 62841-2-11 2015

Figure I.103 – Positions of transducers for sabre saws 19
Figure I.104 – Positions of transducers for jig saws 19

Table 4 – Required performance levels 8
Table I.101 – Test conditions for sabre and jig saws cutting board 14
Table I.102 – Test conditions for jig saws cutting sheet metal 15
Table I.103 – Test conditions for sabre saws cutting wooden beams 15

Documents
Document Sharing Hub

Full document details: IEC 62841-2-11 2015

INTERNATIONAL ELECTROTECHNICAL COMMISSION

ELECTRIC MOTOR-OPERATED HAND-HELD TOOLS, TRANSPORTABLE TOOLS AND LAWN AND GARDEN MACHINERY – SAFETY –

Part 2-11: Particular requirements for hand-held reciprocating saws

FOREWORD

1) The International Electrotechnical Commission (IEC) is a worldwide organization for standardization comprising all national electrotechnical committees (IEC National Committees). The object of IEC is to promote international co-operation on all questions concerning standardization in the electrical and electronic fields. To this end and in addition to other activities, IEC publishes International Standards, Technical Specifications, Technical Reports, Publicly Available Specifications (PAS) and Guides (hereafter referred to as "IEC Publication(s)"). Their preparation is entrusted to technical committees; any IEC National Committee interested in the subject dealt with may participate in this preparatory work. International, governmental and non-governmental organizations liaising with the IEC also participate in this preparation. IEC collaborates closely with the International Organization for Standardization (ISO) in accordance with conditions determined by agreement between the two organizations.
2) The formal decisions or agreements of IEC on technical matters express, as nearly as possible, an international consensus of opinion on the relevant subjects since each technical committee has representation from all interested IEC National Committees.
3) IEC Publications have the form of recommendations for international use and are accepted by IEC National Committees in that sense. While all reasonable efforts are made to ensure that the technical content of IEC Publications is accurate, IEC cannot be held responsible for the way in which they are used or for any misinterpretation by any end user.
4) In order to promote international uniformity, IEC National Committees undertake to apply IEC Publications transparently to the maximum extent possible in their national and regional publications. Any divergence between any IEC Publication and the corresponding national or regional publication shall be clearly indicated in the latter.
5) IEC itself does not provide any attestation of conformity. Independent certification bodies provide conformity assessment services and, in some areas, access to IEC marks of conformity. IEC is not responsible for any services carried out by independent certification bodies.
6) All users should ensure that they have the latest edition of this publication.
7) No liability shall attach to IEC or its directors, employees, servants or agents including individual experts and members of its technical committees and IEC National Committees for any personal injury, property damage or other damage of any nature whatsoever, whether direct or indirect, or for costs (including legal fees) and expenses arising out of the publication, use of, or reliance upon, this IEC Publication or any other IEC Publications.
8) Attention is drawn to the Normative references cited in this publication. Use of the referenced publications is indispensable for the correct application of this publication.
9) Attention is drawn to the possibility that some of the elements of this IEC Publication may be the subject of patent rights. IEC shall not be held responsible for identifying any or all such patent rights.

International Standard IEC 62841-2-11 has been prepared by IEC technical committee 116: Safety of motor-operated electric tools.

The text of this standard is based on the following documents:

FDIS	Report on voting
116/246/FDIS	116/256/RVD

Full information on the voting for the approval of this standard can be found in the report on voting indicated in the above table.

This publication has been drafted in accordance with the ISO/IEC Directives, Part 2.

AVA Documents
Document Sharing Hub

Full document details: IEC 62841-2-11 2015

This Part 2-11 is to be used in conjunction with the first edition of IEC 62841-1 (2014).

This Part 2-11 supplements or modifies the corresponding clauses in IEC 62841-1, so as to convert it into the IEC standard: Particular requirements for hand-held reciprocating saws.

Where a particular subclause of Part 1 is not mentioned in this Part 2-11, that subclause applies as far as relevant. Where this standard states “addition”, “modification” or “replacement”, the relevant text in Part 1 is to be adapted accordingly.

The following print types are used:

– requirements: in roman type;
– *test specifications: in italic type;*
– notes: in small roman type.

The terms defined in Clause 3 are printed in **bold typeface**.

Subclauses, notes and figures which are additional to those in Part 1 are numbered starting from 101.

A list of all parts of the IEC 62841 series, under the general title: *Electric motor-operated hand-held tools, transportable tools and lawn and garden machinery – Safety*, can be found on the IEC website.

The committee has decided that the contents of this publication will remain unchanged until the stability date indicated on the IEC website under "http://webstore.iec.ch" in the data related to the specific publication. At this date, the publication will be

- reconfirmed,
- withdrawn,
- replaced by a revised edition, or
- amended.

NOTE The attention of National Committees is drawn to the fact that equipment manufacturers and testing organizations may need a transitional period following publication of a new, amended or revised IEC publication in which to make products in accordance with the new requirements and to equip themselves for conducting new or revised tests.

It is the recommendation of the committee that the content of this publication be adopted for implementation nationally not earlier than 36 months from the date of publication.

Documents
Document Sharing Hub

Full document details: IEC 62841-2-11 2015

ELECTRIC MOTOR-OPERATED HAND-HELD TOOLS, TRANSPORTABLE TOOLS AND LAWN AND GARDEN MACHINERY – SAFETY –

Part 2-11: Particular requirements for hand-held reciprocating saws

1 Scope

This clause of Part 1 is applicable, except as follows:

Addition:

This part of IEC 62841 applies to **reciprocating saws** such as **jig saws** and **sabre saws**.

2 Normative references

This clause of Part 1 is applicable, except as follows:

Addition:

ISO 16893-1:2008, *Wood based panels – Particleboard – Part 1: Classifications*

3 Terms and definitions

This clause of Part 1 is applicable, except as follows:

Additional definitions:

3.101
reciprocating saw
tool intended for cutting various materials with a blade or blades acting in a reciprocating or oscillating motion

3.102
jig saw
reciprocating saw with a base plate that may allow bevel adjustments

Note 1 to entry: Typical designs of **jig saws** are shown in Figure 102.

3.103
sabre saw
reciprocating saw with a guide plate that may allow tilting movements

Note 1 to entry: Typical designs of **sabre saws** are shown in Figure 103.

4 General requirements

This clause of Part 1 is applicable.

Documents
Document Sharing Hub

Full document details: IEC 62841-2-11 2015

5 General conditions for the tests

This clause of Part 1 is applicable, except as follows:

5.17 *Addition:*

The mass of the tool includes the dust extraction adapter, if any.

6 Radiation, toxicity and similar hazards

This clause of Part 1 is applicable.

7 Classification

This clause of Part 1 is applicable.

8 Marking and instructions

This clause of Part 1 is applicable, except as follows:

8.14.1 *Addition:*

For **reciprocating saws**, the additional safety instructions as specified in 8.14.1.101 shall be given. This part may be printed separately from the “General Power Tool Safety Warnings”.

8.14.1.101 Safety instructions for reciprocating saws

Hold the power tool by insulated gripping surfaces, when performing an operation where the cutting accessory may contact hidden wiring or its own cord. *Cutting accessory contacting a "live" wire may make exposed metal parts of the power tool "live" and could give the operator an electric shock.*

Use clamps or another practical way to secure and support the workpiece to a stable platform. *Holding the workpiece by hand or against your body leaves it unstable and may lead to loss of control.*

NOTE The above warning is not applicable for garden saws for tree or hedge services.

8.14.2 b) *Addition:*

101) Instruction on the correct use of the dust collection system, if any;

102) Information regarding the cutting capacity;

103) Instruction on how to adjust the tool for different saw blade positions, if applicable.

8.14.2 c) *Addition:*

101) Instruction on how to properly clean/clear the chip ejection opening, if any.

9 Protection against access to live parts

This clause of Part 1 is applicable.

10 Starting

This clause of Part 1 is applicable.

Documents
Document Sharing Hub

Full document details: IEC 62841-2-11 2015

11 Input and current

This clause of Part 1 is applicable.

12 Heating

This clause of Part 1 is applicable.

13 Resistance to heat and fire

This clause of Part 1 is applicable.

14 Moisture resistance

This clause of Part 1 is applicable.

15 Resistance to rusting

This clause of Part 1 is applicable.

16 Overload protection of transformers and associated circuits

This clause of Part 1 is applicable.

17 Endurance

This clause of Part 1 is applicable.

18 Abnormal operation

This clause of Part 1 is applicable, except as follows:

18.8 *Replacement of Table 4:*

Table 4 – Required performance levels

Type and purpose of SCF	Minimum performance level (PL)
Power switch – prevent unwanted switch-on	b
Power switch – provide desired switch-off for jig saws	a
Power switch – provide desired switch-off for sabre saws	b
Any electronic control to pass the test of 18.3	Not an **SCF**
Any speed limiting device	Not an **SCF**
Prevent exceeding thermal limits as in Clause 18	a
Prevent self-resetting as required in 23.3	b

19 Mechanical hazards

This clause of Part 1 is applicable, except as follows:

Documents
Document Sharing Hub

Full document details: IEC 62841-2-11 2015

19.1 *Replacement of the first paragraph:*

Moving and dangerous parts other than the saw blade shall be so positioned or enclosed to provide adequate protection against personal injury. Requirements for the saw blade are given in 19.101.

19.6 This subclause is not applicable.

19.101 Saw blade barrier

1) For **jig saws**

A barrier shall be provided to prevent inadvertent contact with the cutting edge of the saw blade above the plane of the base plate and from the front of the tool. The barrier shall not prevent the visual observation of the saw blade in contact with the workpiece.

Compliance is checked by inspection and by the following test.

*The **jig saw** is set for the right-angled cut. The test probe of Figure 101a) is advanced in any single plane perpendicular to the saw blade and parallel to and above the plane of the base plate as shown in Figure 101b) and Figure 101c). The longitudinal axis of the test probe shall be perpendicular to the toothed edge of the saw blade. The test probe shall be equally shared about the central plane of the saw blade. When the test probe is moved towards the saw blade, it shall not be able to touch its toothed edge.*

2) For other types of **reciprocating saws**

If a **reciprocating saw** is designed with a grip zone adjacent and behind the saw blade, a barrier shall be provided to prevent inadvertent contact with the teeth of the saw blade in any saw blade position in accordance with 8.14.2 b) 103).

The barrier shall:

– be located between the grip zone and the teeth of the saw blade;
– have a minimum height of 6 mm above the grip surface; and
– extend a minimum of 6 mm on either side of the teeth of the saw blade.

A barrier is not required if the tool is supplied with an auxiliary front handle.

Compliance is checked by inspection and by measurement.

20 Mechanical strength

This clause of Part 1 is applicable.

21 Construction

This clause of Part 1 is applicable, except as follows:

21.18.1 *Addition:*

For **jig saws**, power switches other than momentary power switches are permitted.

22 Internal wiring

This clause of Part 1 is applicable.

Documents
Document Sharing Hub
Full document details: IEC 62841-2-11 2015

23 Components

This clause of Part 1 is applicable, except as follows:

23.3 *Replacement of the first paragraph:*

Protection devices (e.g. overload or over-temperature protection devices) or circuits that switch off the tool shall be of the non-self-resetting type unless the tool is equipped with a **momentary power switch** with no provision for being locked in the “on” position.

24 Supply connection and external flexible cords

This clause of Part 1 is applicable.

25 Terminals for external conductors

This clause of Part 1 is applicable.

26 Provision for earthing

This clause of Part 1 is applicable.

27 Screws and connections

This clause of Part 1 is applicable.

28 Creepage distances, clearances and distances through insulation

This clause of Part 1 is applicable.

Documents
Document Sharing Hub

Full document details: IEC 62841-2-11 2015

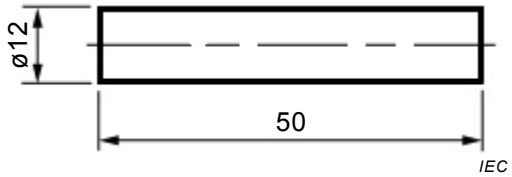

a) Details of test probe

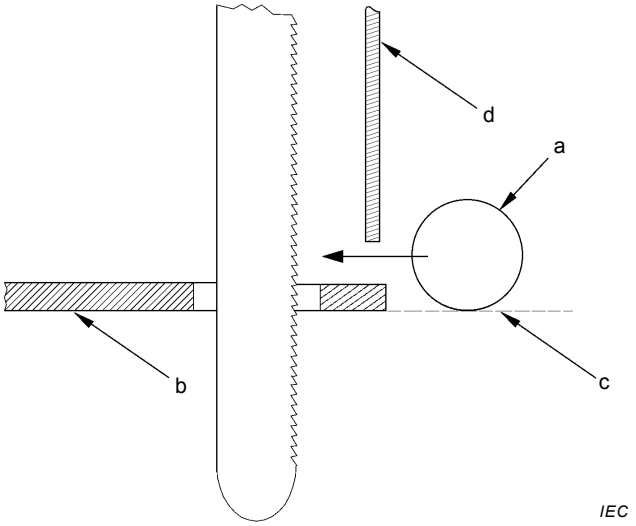

NOTE Upper structure of saw, which should prevent the test probe touching the saw blade, is omitted for simplicity.

b) Side section showing position and direction of movement of test probe

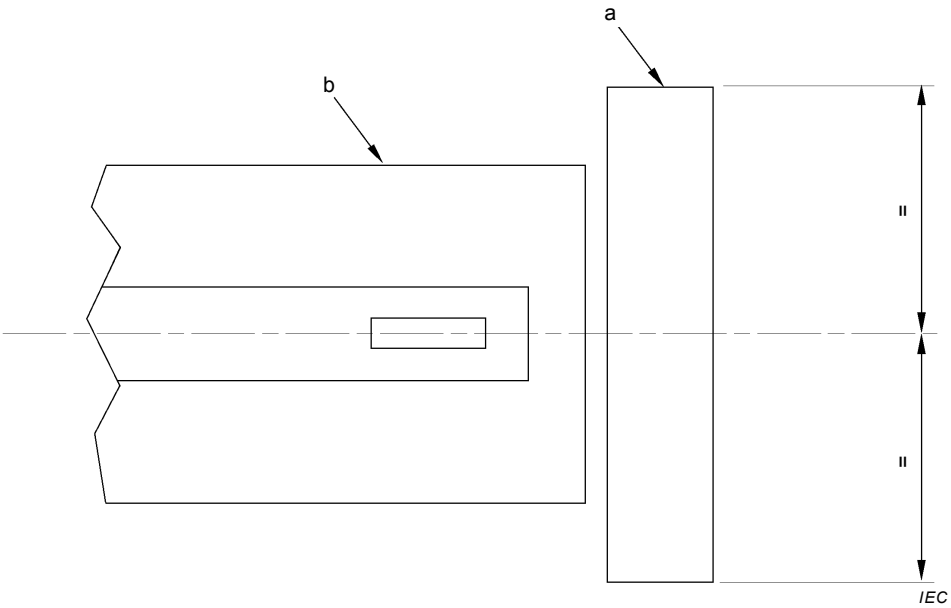

NOTE Upper structure of saw is omitted for simplicity.

c) Plan view of guide plate showing position of test probe

Key

a test probe

b base plate

c plane of base plate

d barrier

Figure 101 – Test probe

Documents
Document Sharing Hub
Full document details: IEC 62841-2-11 2015

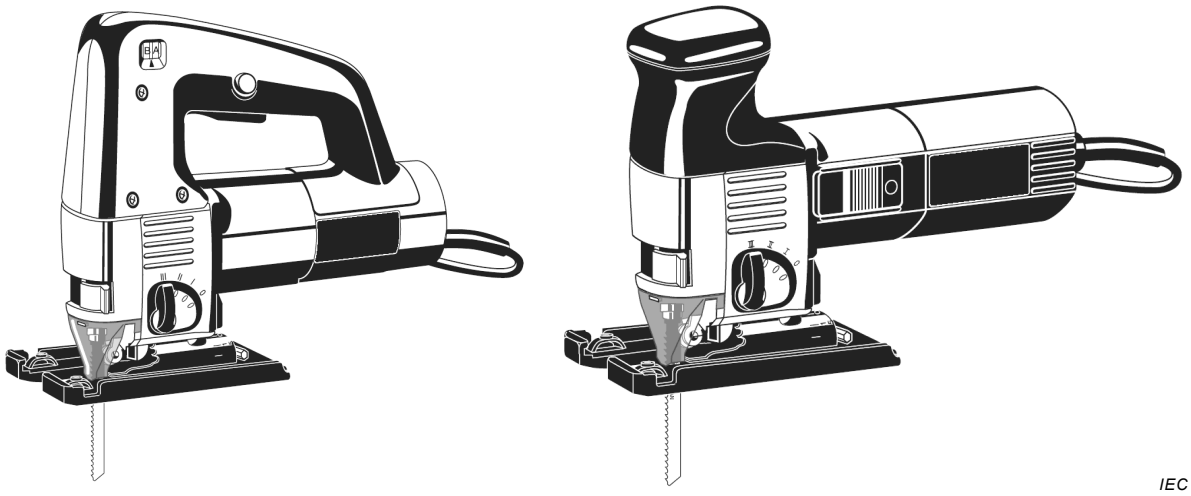

Figure 102 – Typical designs of jig saws

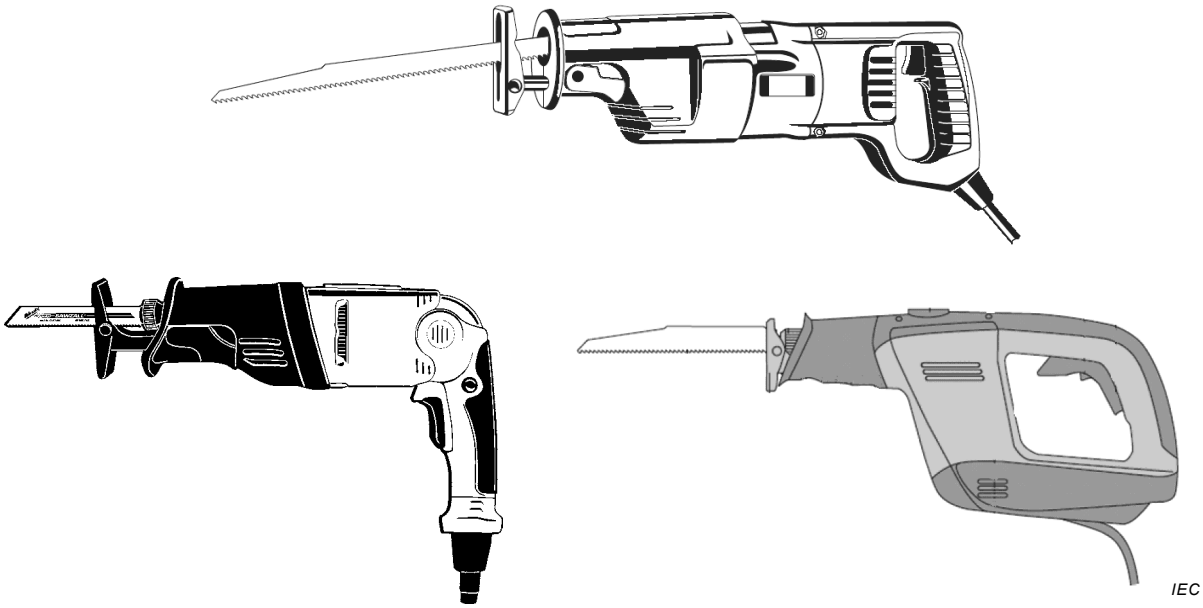

Figure 103 – Typical designs of sabre saws

Documents
Document Sharing Hub
Full document details: IEC 62841-2-11 2015

Annexes

The annexes of Part 1 are applicable except as follows:

Annex I
(informative)

Measurement of noise and vibration emissions

NOTE In Europe (EN 62841-2-11), Annex I is normative.

I.2 Noise test code (grade 2)

This clause of Part 1 is applicable except as follows:

I.2.4 Installation and mounting conditions of the power tools during noise tests

Addition:

Reciprocating saws are suspended in such a way as to correspond to **normal use**.

I.2.5 Operating conditions

Addition:

Reciprocating saws are tested at no-load, fitted with the smallest saw blade as specified for sawing chipboard. Pendulum systems, if any, are set to the maximum. Speed settings, if any, are adjusted to the highest value.

NOTE Experimental investigations have shown that the noise emission values of **reciprocating saws** at no-load and under load are very similar. For reasons of simplification, the noise emission is therefore measured at no-load.

The temperature requirements of 5.6 are not applicable.

I.2.9 Declaration and verification of noise emission values

Replacement of the second paragraph:

For a standard deviation of reproducibility of the method σ_{R0} of 1,5 dB and for a typical standard deviation of production, the values for the uncertainties, K_{pA} and K_{WA} respectively, are expected to be 5 dB.

NOTE 101 The values K_{pA} and K_{WA} are higher, because they include the noise emission under load.

I.3 Vibration

This clause of Part 1 is applicable except as follows:

I.3.3.2 Location of measurement

Addition:

Figures I.103 and I.104 show the positions for different saws.

Documents
Document Sharing Hub

Full document details: IEC 62841-2-11 2015