IEC 62841-3-5

Edition 1.0 2022-04

INTERNATIONAL STANDARD

NORME INTERNATIONALE

Electric motor-operated hand-held tools, transportable tools and lawn and garden machinery – Safety – Part 3-5: Particular requirements for transportable band saws

Outils électroportatifs à moteur, outils portables et machines pour jardins et pelouses – Sécurité – Partie 3-5: Exigences particulières pour les scies à ruban transportables

IEC 62841-3-5:2022-04(en-fr)

Documents
Document Sharing Hub
Full document details: IEC 62841-3-5-2022

THIS PUBLICATION IS COPYRIGHT PROTECTED
Copyright © 2022 IEC, Geneva, Switzerland

All rights reserved. Unless otherwise specified, no part of this publication may be reproduced or utilized in any form or by any means, electronic or mechanical, including photocopying and microfilm, without permission in writing from either IEC or IEC's member National Committee in the country of the requester. If you have any questions about IEC copyright or have an enquiry about obtaining additional rights to this publication, please contact the address below or your local IEC member National Committee for further information.

Droits de reproduction réservés. Sauf indication contraire, aucune partie de cette publication ne peut être reproduite ni utilisée sous quelque forme que ce soit et par aucun procédé, électronique ou mécanique, y compris la photocopie et les microfilms, sans l'accord écrit de l'IEC ou du Comité national de l'IEC du pays du demandeur. Si vous avez des questions sur le copyright de l'IEC ou si vous désirez obtenir des droits supplémentaires sur cette publication, utilisez les coordonnées ci-après ou contactez le Comité national de l'IEC de votre pays de résidence.

IEC Secretariat
3, rue de Varembé
CH-1211 Geneva 20
Switzerland

Tel.: +41 22 919 02 11
info@iec.ch
www.iec.ch

About the IEC
The International Electrotechnical Commission (IEC) is the leading global organization that prepares and publishes International Standards for all electrical, electronic and related technologies.

About IEC publications
The technical content of IEC publications is kept under constant review by the IEC. Please make sure that you have the latest edition, a corrigendum or an amendment might have been published.

IEC publications search - webstore.iec.ch/advsearchform
The advanced search enables to find IEC publications by a variety of criteria (reference number, text, technical committee, …). It also gives information on projects, replaced and withdrawn publications.

IEC Just Published - webstore.iec.ch/justpublished
Stay up to date on all new IEC publications. Just Published details all new publications released. Available online and once a month by email.

IEC Customer Service Centre - webstore.iec.ch/csc
If you wish to give us your feedback on this publication or need further assistance, please contact the Customer Service Centre: sales@iec.ch.

IEC Products & Services Portal - products.iec.ch
Discover our powerful search engine and read freely all the publications previews. With a subscription you will always have access to up to date content tailored to your needs.

Electropedia - www.electropedia.org
The world's leading online dictionary on electrotechnology, containing more than 22 300 terminological entries in English and French, with equivalent terms in 19 additional languages. Also known as the International Electrotechnical Vocabulary (IEV) online.

A propos de l'IEC
La Commission Electrotechnique Internationale (IEC) est la première organisation mondiale qui élabore et publie des Normes internationales pour tout ce qui a trait à l'électricité, à l'électronique et aux technologies apparentées.

A propos des publications IEC
Le contenu technique des publications IEC est constamment revu. Veuillez vous assurer que vous possédez l'édition la plus récente, un corrigendum ou amendement peut avoir été publié.

Recherche de publications IEC - webstore.iec.ch/advsearchform
La recherche avancée permet de trouver des publications IEC en utilisant différents critères (numéro de référence, texte, comité d'études, …). Elle donne aussi des informations sur les projets et les publications remplacées ou retirées.

IEC Just Published - webstore.iec.ch/justpublished
Restez informé sur les nouvelles publications IEC. Just Published détaille les nouvelles publications parues. Disponible en ligne et une fois par mois par email.

Service Clients - webstore.iec.ch/csc
Si vous désirez nous donner des commentaires sur cette publication ou si vous avez des questions contactez-nous: sales@iec.ch.

IEC Products & Services Portal - products.iec.ch
Découvrez notre puissant moteur de recherche et consultez gratuitement tous les aperçus des publications. Avec un abonnement, vous aurez toujours accès à un contenu à jour adapté à vos besoins.

Electropedia - www.electropedia.org
Le premier dictionnaire d'électrotechnologie en ligne au monde, avec plus de 22 300 articles terminologiques en anglais et en français, ainsi que les termes équivalents dans 19 langues additionnelles. Egalement appelé Vocabulaire Electrotechnique International (IEV) en ligne.

Documents
Document Sharing Hub

Full document details: IEC 62841-3-5-2022

IEC 62841-3-5

Edition 1.0 2022-04

INTERNATIONAL STANDARD

NORME INTERNATIONALE

Electric motor-operated hand-held tools, transportable tools and lawn and garden machinery – Safety – Part 3-5: Particular requirements for transportable band saws

Outils électroportatifs à moteur, outils portables et machines pour jardins et pelouses – Sécurité – Partie 3-5: Exigences particulières pour les scies à ruban transportables

INTERNATIONAL
ELECTROTECHNICAL
COMMISSION

COMMISSION
ELECTROTECHNIQUE
INTERNATIONALE

ICS 25.140.20

ISBN 978-2-8322-1097-6

Warning! Make sure that you obtained this publication from an authorized distributor.
Attention! Veuillez vous assurer que vous avez obtenu cette publication via un distributeur agréé.

® Registered trademark of the International Electrotechnical Commission
Marque déposée de la Commission Electrotechnique Internationale

Documents
Document Sharing Hub

Full document details: IEC 62841-3-5-2022

CONTENTS

FOREWORD 4
1 Scope 6
2 Normative references 6
3 Terms and definitions 7
4 General requirements 8
5 General conditions for the tests 9
6 Radiation, toxicity and similar hazards 9
7 Classification 9
8 Marking and instructions 9
9 Protection against access to live parts 10
10 Starting 10
11 Input and current 10
12 Heating 10
13 Resistance to heat and fire 10
14 Moisture resistance 10
15 Resistance to rusting 10
16 Overload protection of transformers and associated circuits 11
17 Endurance 11
18 Abnormal operation 11
19 Mechanical hazards 11
20 Mechanical strength 16
21 Construction 16
22 Internal wiring 17
23 Components 17
24 Supply connection and external flexible cords 17
25 Terminals for external conductors 17
26 Provision for earthing 17
27 Screws and connections 17
28 Creepage distances, clearances and distances through insulation 17
Annexes 18
Annex I (informative) Measurement of noise and vibration emissions 18
Annex AA (normative) Requirements for interlocked access cover for band saws 20
Bibliography 21

Figure 101 – Parts of a typical band saw 8
Figure 102 – Test probe 13
Figure 103 – Table and fence dimensions 14
Figure 104 – Cross-cutting fence 15
Figure 105 – Saw band guides 16

Documents
Document Sharing Hub

Full document details: IEC 62841-3-5-2022

Table 4 – Required performance levels 11
Table I.101 – Noise test conditions for band saws that are not intended for cutting metal 18
Table I.102 – Test conditions for band saws that are intended for cutting metal 19

Documents
Document Sharing Hub
Full document details: IEC 62841-3-5-2022

INTERNATIONAL ELECTROTECHNICAL COMMISSION

ELECTRIC MOTOR-OPERATED HAND-HELD TOOLS, TRANSPORTABLE TOOLS AND LAWN AND GARDEN MACHINERY – SAFETY –

Part 3-5: Particular requirements for transportable band saws

FOREWORD

1) The International Electrotechnical Commission (IEC) is a worldwide organization for standardization comprising all national electrotechnical committees (IEC National Committees). The object of IEC is to promote international co-operation on all questions concerning standardization in the electrical and electronic fields. To this end and in addition to other activities, IEC publishes International Standards, Technical Specifications, Technical Reports, Publicly Available Specifications (PAS) and Guides (hereafter referred to as "IEC Publication(s)"). Their preparation is entrusted to technical committees; any IEC National Committee interested in the subject dealt with may participate in this preparatory work. International, governmental and non-governmental organizations liaising with the IEC also participate in this preparation. IEC collaborates closely with the International Organization for Standardization (ISO) in accordance with conditions determined by agreement between the two organizations.
2) The formal decisions or agreements of IEC on technical matters express, as nearly as possible, an international consensus of opinion on the relevant subjects since each technical committee has representation from all interested IEC National Committees.
3) IEC Publications have the form of recommendations for international use and are accepted by IEC National Committees in that sense. While all reasonable efforts are made to ensure that the technical content of IEC Publications is accurate, IEC cannot be held responsible for the way in which they are used or for any misinterpretation by any end user.
4) In order to promote international uniformity, IEC National Committees undertake to apply IEC Publications transparently to the maximum extent possible in their national and regional publications. Any divergence between any IEC Publication and the corresponding national or regional publication shall be clearly indicated in the latter.
5) IEC itself does not provide any attestation of conformity. Independent certification bodies provide conformity assessment services and, in some areas, access to IEC marks of conformity. IEC is not responsible for any services carried out by independent certification bodies.
6) All users should ensure that they have the latest edition of this publication.
7) No liability shall attach to IEC or its directors, employees, servants or agents including individual experts and members of its technical committees and IEC National Committees for any personal injury, property damage or other damage of any nature whatsoever, whether direct or indirect, or for costs (including legal fees) and expenses arising out of the publication, use of, or reliance upon, this IEC Publication or any other IEC Publications.
8) Attention is drawn to the Normative references cited in this publication. Use of the referenced publications is indispensable for the correct application of this publication.
9) Attention is drawn to the possibility that some of the elements of this IEC Publication may be the subject of patent rights. IEC shall not be held responsible for identifying any or all such patent rights.

IEC 62841-3-5 has been prepared by IEC technical committee 116: Safety of motor-operated electric tools. It is an International Standard.

The text of this International Standard is based on the following documents:

Draft	Report on voting
116/574/FDIS	116/585/RVD

Full information on the voting for its approval can be found in the report on voting indicated in the above table.

The language used for the development of this International Standard is English.

Documents
Document Sharing Hub

Full document details: IEC 62841-3-5-2022

This document was drafted in accordance with ISO/IEC Directives, Part 2, and developed in accordance with ISO/IEC Directives, Part 1 and ISO/IEC Directives, IEC Supplement, available at www.iec.ch/members_experts/refdocs. The main document types developed by IEC are described in greater detail at www.iec.ch/standardsdev/publications.

This Part 3-5 is to be used in conjunction with the first edition of IEC 62841-1:2014.

This Part 3-5 supplements or modifies the corresponding clauses in IEC 62841-1:2014, so as to convert it into the IEC Standard: Particular requirements for transportable band saws.

Where a particular subclause of IEC 62841-1:2014 is not mentioned in this Part 3-5, that subclause applies as far as relevant. Where this standard states "addition", "modification" or "replacement", the relevant text in IEC 62841-1:2014 is to be adapted accordingly.

The following print types are used:

– requirements: in roman type;
– *test specifications: in italic type;*
– notes: in small roman type.

The terms defined in Clause 3 are printed in **bold typeface**.

Subclauses, notes, tables and figures which are additional to those in IEC 62841-1:2014 are numbered starting from 101.

A list of all parts of the IEC 62841 series, under the general title: *Electric motor-operated hand-held tools, transportable tools and lawn and garden machinery – Safety*, can be found on the IEC website.

The committee has decided that the contents of this document will remain unchanged until the stability date indicated on the IEC website under webstore.iec.ch in the data related to the specific document. At this date, the document will be

- reconfirmed,
- withdrawn,
- replaced by a revised edition, or
- amended.

NOTE The attention of National Committees is drawn to the fact that equipment manufacturers and testing organizations may need a transitional period following publication of a new, amended or revised IEC publication in which to make products in accordance with the new requirements and to equip themselves for conducting new or revised tests.

It is the recommendation of the committee that the content of this publication be adopted for implementation nationally not earlier than 36 months from the date of publication.

Documents
Document Sharing Hub

Full document details: IEC 62841-3-5-2022

ELECTRIC MOTOR-OPERATED HAND-HELD TOOLS, TRANSPORTABLE TOOLS AND LAWN AND GARDEN MACHINERY – SAFETY –

Part 3-5: Particular requirements for transportable band saws

1 Scope

IEC 62841-1:2014, Clause 1 is applicable, except as follows.

Addition:

This document applies to **band saws** intended for cutting wood and analogous materials, plastics and metals, except magnesium.

This document does not apply to transportable scroll saws and jig saws with a reciprocating blade.

This document does not apply to

– hand-held **band saws**;
– non-vertical saws; and
– wire saws.

NOTE 101 It is planned that a document on transportable scroll saws and jig saws will be published.

NOTE 102 Hand-held **band saws** will be covered by a future part of IEC 62841-2.

NOTE 103 In Europe (EN IEC 62841-3-5), the following conditions apply:

This document does not apply to stationary **band saws** intended to cut wood and similar materials. Stationary **band saws** that are intended to cut wood and similar materials are covered by EN 1807-1.

This document applies to **band saws** having a mass of:

– maximum 25 kg for tools capable of being lifted by hand by one person;
– maximum 50 kg for tools capable of being lifted by hand by two persons.

2 Normative references

IEC 62841-1:2014, Clause 2 is applicable, except as follows.

Addition:

IEC 62841-1:2014, *Electric motor-operated hand-held tools, transportable tools and lawn and garden machinery – Safety – Part 1: General requirements*

Documents
Document Sharing Hub

Full document details: IEC 62841-3-5-2022

3 Terms and definitions

IEC 62841-1:2014, Clause 3 is applicable, except as follows.

Addition:

3.101
band saw
tool designed to cut materials by means of a vertical revolving endless **saw band** which is carried on two or more band wheels

Note 101 to entry: **Band saws** have a table to support and position the workpiece that is fed by hand against the **saw band**. See Figure 101.

3.102
cross-cutting fence
device to guide or position the workpiece during the cutting process that is designed to move parallel with the plane of the **saw band**

Note 101 to entry: The **cross-cutting fence** may have provisions to adjust the workpiece guiding face laterally and may have mitre angle capability.

3.103
parallel fence
fence that has the workpiece guiding face parallel with the plane of the **saw band** and can be set to a desired distance from the **saw band**

3.104
saw band
flexible closed loop metal band with cutting elements such as teeth or abrasive material

Documents
Document Sharing Hub

Full document details: IEC 62841-3-5-2022

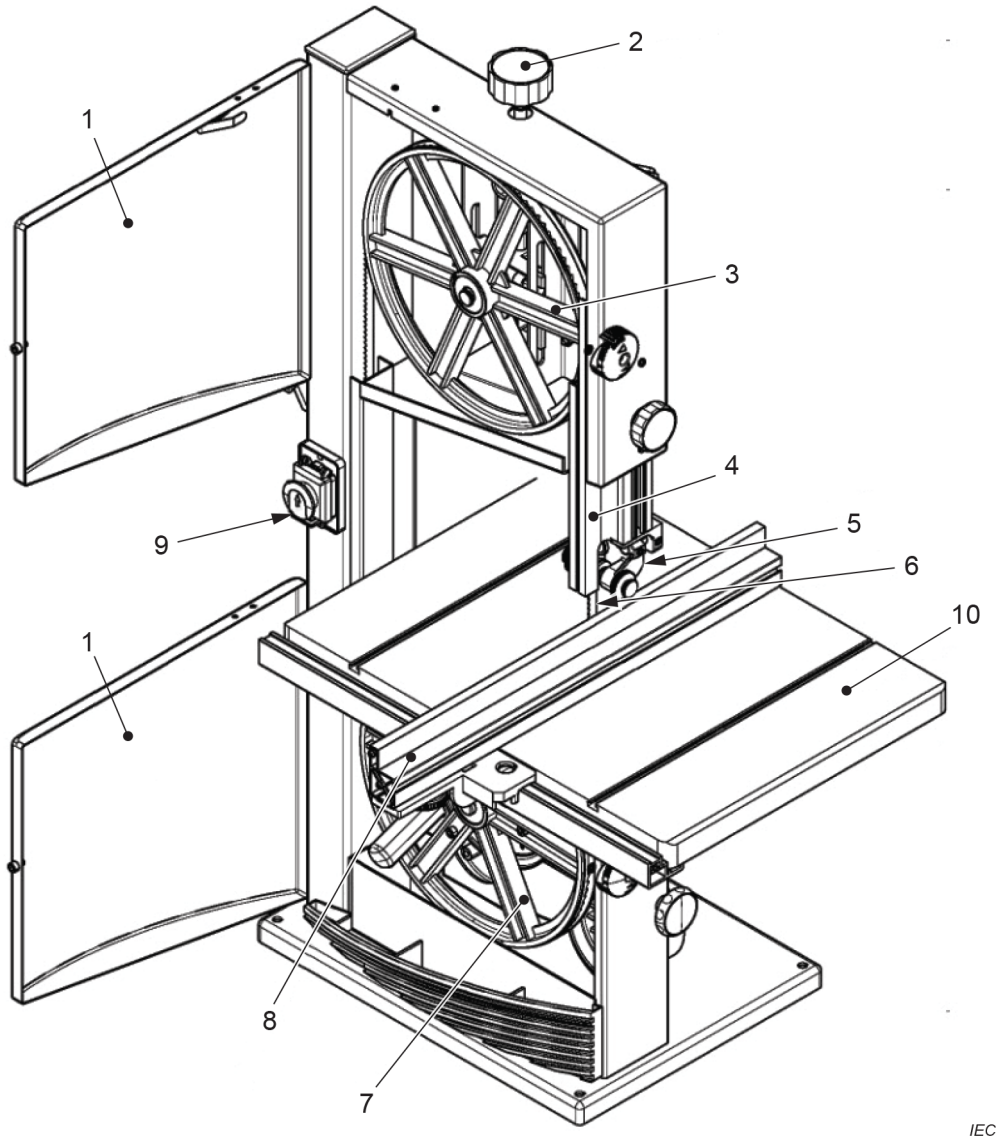

Key

1 access cover

2 **saw band** tensioner

3 band wheel

4 adjustable guard for the cutting area

5 **saw band** guide

6 **saw band**

7 driving band wheel

8 **parallel fence**

9 power switch

10 table

Figure 101 – Parts of a typical band saw

4 General requirements

IEC 62841-1:2014, Clause 4 is applicable.

Documents
Document Sharing Hub
Full document details: IEC 62841-3-5-2022

5 General conditions for the tests

IEC 62841-1:2014, Clause 5 is applicable, except as follows.

5.17 *Addition:*

The mass of the tool includes the ***guard*** *and fence(s), if any.*

Any additional parts such as leg sets or carrying means that are required in accordance with the user instructions are included in the mass.

6 Radiation, toxicity and similar hazards

IEC 62841-1:2014, Clause 6 is applicable.

7 Classification

IEC 62841-1:2014, Clause 7 is applicable.

8 Marking and instructions

IEC 62841-1:2014, Clause 8 is applicable, except as follows.

8.3 *Addition:*

Band saws shall be marked with:

– direction of rotation of the driven band wheel which shall be indicated on the tool by an arrow raised or sunk, or by any other means not less visible and indelible;

In addition, where a tool is designed to operate at more than one cutting speed, the following requirements apply:

– on tools where a speed change is achieved by changing the position of the drive belts on the drive pulleys, the selected speed shall be indicated on the same side of the tool as the start control by a diagram showing the relevant speed selected for each combination of pulleys;
– on tools where a speed change is achieved by an electronic control circuit, the selected speed shall be indicated on the tool at the selecting device (e.g. variable speed control dial provided with numerical speed settings).

8.14.1 *Addition:*

The additional safety instructions as specified in 8.14.1.101 shall be given. This part may be printed separately from the "General power tool safety warnings".

8.14.1.101 Safety instructions for band saws

a) **Always use saw bands that are not damaged or deformed**. *Damaged or deformed* ***saw bands*** *could split and/or snap.*
b) **Do not use liquid coolants**. *Using water or other liquid coolants may result in electrocution or shock.*

NOTE 101 The warning in item b) above is omitted for tools equipped with a **liquid system**.

Documents
Document Sharing Hub

Full document details: IEC 62841-3-5-2022

c) **Operate the band saw at the proper speed for recommended applications and materials**. *Using a speed inappropriate for the material being cut may lead to breakage of the **saw band** and personal injury.*

d) **Do not operate the tool when the band saw blade access cover is open**. *Contact with the moving parts may result in personal injury.*

NOTE 102 At the manufacturer's discretion, the term "**band saw** blade" is replaced by "**saw band**".

8.14.2 a) *Addition:*

101) Information about specified **saw band** dimensions (e.g. length and width);

102) Instruction on how to adjust the **saw band** guides and thrust wheel;

103) Instructions for the **saw band** changing procedure including proper **saw band** direction installation and how to mount and tension **saw bands**.

8.14.2 b) *Addition:*

101) Instruction to adjust the **guard** as close to the workpiece as practicable;

102) Instruction on how to adjust the **saw band** guide for the cutting area;

103) Instruction on how to set a bevel angle;

104) Instructions on how to properly feed the workpiece, including the application of auxiliary materials that may be used as an aid to feed the workpiece;

105) Instruction to wear gloves when handling **saw bands**.

9 Protection against access to live parts

IEC 62841-1:2014, Clause 9 is applicable.

10 Starting

IEC 62841-1:2014, Clause 10 is applicable.

11 Input and current

IEC 62841-1:2014, Clause 11 is applicable.

12 Heating

IEC 62841-1:2014, Clause 12 is applicable.

13 Resistance to heat and fire

IEC 62841-1:2014, Clause 13 is applicable.

14 Moisture resistance

IEC 62841-1:2014, Clause 14 is applicable.

15 Resistance to rusting

IEC 62841-1:2014, Clause 15 is applicable.

Documents
Document Sharing Hub

Full document details: IEC 62841-3-5-2022

16 Overload protection of transformers and associated circuits

IEC 62841-1:2014, Clause 16 is applicable.

17 Endurance

IEC 62841-1:2014, Clause 17 is applicable.

18 Abnormal operation

IEC 62841-1:2014, Clause 18 is applicable, except as follows.

18.8 *Replacement of Table 4:*

Table 4 – Required performance levels

Type and purpose of SCF	Minimum Performance Level (PL)
Power switch – prevent unwanted switch-on	b
Power switch – provide desired switch-off	b
Provide desired direction of rotation	Not an **SCF**
Any electronic control to pass the test of 18.3	a
Prevent exceeding thermal limits as in 18.4 and 18.5.3	a
Provide function to de-energize or disengage drive to the **saw band** as required in 19.101.1 d)	a
Provide run-down time as required by 19.105	a
Prevent self-resetting as required in 23.3	b
NOTE In Europe (EN IEC 62841-3-5), the following additional requirement applies:	
Restart prevention as required by 21.18.2.1	a

19 Mechanical hazards

IEC 62841-1:2014, Clause 19 is applicable, except as follows.

19.1 *Addition:*

The requirements of 19.1, except for mechanical strength requirements, do not apply to the access cover specified in 19.101 and the adjustable **guard** in the cutting area specified in 19.102.

19.3 *Replacement:*

It shall not be possible to reach hazardous moving parts through dust collection openings with the **detachable parts** or provisions for dust collection removed, if any.

Compliance is checked by the following test.

For dust collection openings, the test probe B of IEC 61032:1997 is used. The test probe is inserted with a force not exceeding 5 N into the dust collection opening until the probe's stop face reaches the plane of the dust collection opening and shall not touch hazardous moving parts.

AVA Documents
Document Sharing Hub

19.6 This subclause of IEC 62841-1:2014 is not applicable.

19.7 This subclause of IEC 62841-1:2014 is not applicable for tools intended to be fixed to a bench or the floor in accordance with 8.14.2 a) 1).

19.7.101 **Band saws** not intended to be fixed to a bench or the floor in accordance with 8.14.2 a) 1) shall have adequate stability.

Compliance is checked by the following tests.

*The tests are conducted with the **band saw** placed on a horizontal surface of medium density fibreboard (MDF) having a density of 650 kg/m^3 to 850 kg/m^3. If the tool is provided with a stand, the tool is tested with or without the stand in the most unfavourable configuration(s).*

*When a push force of 100 N is applied to the front edge of the **band saw** table in the plane of the **saw band** and in the direction of the workpiece feed, the tool shall not move.*

The push force is then increased to 300 N or until the tool begins to move horizontally, whichever is achieved first. During this test, the tool shall not tip over.

19.8 This subclause of IEC 62841-1:2014 is applicable.

19.101 Band wheel, driving mechanism and saw band guarding

19.101.1 The band wheels, the drive mechanism and the whole **saw band** in the non-cutting area shall be guarded.

Access cover(s) that have to be opened to change the **saw band** in accordance with 8.14.2 a) 103) shall remain attached to the **band saw** and at least one of the following requirements a) to d) shall be met:

a) The access cover(s) is a fixed guard; or

b) The access cover(s) do not permit access to hazardous moving parts other than the **saw band** when open; or

c) The **power switch** is located on the same side as the access cover(s); or

d) The access cover(s) comply with the requirements of Annex AA.

For options a) and c), compliance is checked by inspection. For option b), compliance is checked by manual test using test probe B of IEC 61032:1997 with a force not exceeding 5 N. For option d), compliance is checked by the requirements of Annex AA.

NOTE 101 In Europe (EN IEC 62841-3-5), the following requirement applies:

19.101.1 The band wheels, the drive mechanism and the whole **saw band** in the non-cutting area shall be guarded.

Access cover(s) that have to be opened to change the **saw band** in accordance with 8.14.2 a) 103) shall remain attached to the **band saw** and comply with the requirements of Annex AA.

Compliance is checked by the requirements of Annex AA.

19.101.2 An access cover in accordance with 19.101.1 c), if any, shall prevent access to hazardous moving parts behind the access cover while the access cover is being opened and before the drive to the **saw band** is de-energized or disengaged.

Compliance is checked by the following test.

Documents
Document Sharing Hub

Full document details: IEC 62841-3-5-2022