IEC 62841-3-8

Edition 1.0 2024-10
EXTENDED VERSION

INTERNATIONAL STANDARD

colour inside

This full version of IEC 62841-3-8:2024 includes the content of the references made to IEC 62841-1:2014

Electric motor-operated hand-held tools, transportable tools and lawn and garden machinery – Safety –
Part 3-8: Particular requirements for transportable single spindle vertical moulders

IEC 62841-3-8:2024-10 EXV(en)

AVA Documents
Document Sharing Hub

Full document details: IEC 62841-3-8 2024 EXV

THIS PUBLICATION IS COPYRIGHT PROTECTED
Copyright © 2024 IEC, Geneva, Switzerland

All rights reserved. Unless otherwise specified, no part of this publication may be reproduced or utilized in any form or by any means, electronic or mechanical, including photocopying and microfilm, without permission in writing from either IEC or IEC's member National Committee in the country of the requester. If you have any questions about IEC copyright or have an enquiry about obtaining additional rights to this publication, please contact the address below or your local IEC member National Committee for further information.

IEC Secretariat
3, rue de Varembé
CH-1211 Geneva 20
Switzerland

Tel.: +41 22 919 02 11
info@iec.ch
www.iec.ch

About the IEC
The International Electrotechnical Commission (IEC) is the leading global organization that prepares and publishes International Standards for all electrical, electronic and related technologies.

About IEC publications
The technical content of IEC publications is kept under constant review by the IEC. Please make sure that you have the latest edition, a corrigendum or an amendment might have been published.

IEC publications search - webstore.iec.ch/advsearchform
The advanced search enables to find IEC publications by a variety of criteria (reference number, text, technical committee, …). It also gives information on projects, replaced and withdrawn publications.

IEC Just Published - webstore.iec.ch/justpublished
Stay up to date on all new IEC publications. Just Published details all new publications released. Available online and once a month by email.

IEC Customer Service Centre - webstore.iec.ch/csc
If you wish to give us your feedback on this publication or need further assistance, please contact the Customer Service Centre: sales@iec.ch.

IEC Products & Services Portal - products.iec.ch
Discover our powerful search engine and read freely all the publications previews, graphical symbols and the glossary. With a subscription you will always have access to up to date content tailored to your needs.

Electropedia - www.electropedia.org
The world's leading online dictionary on electrotechnology, containing more than 22 500 terminological entries in English and French, with equivalent terms in 25 additional languages. Also known as the International Electrotechnical Vocabulary (IEV) online.

Documents
Document Sharing Hub

Full document details: IEC 62841-3-8 2024 EXV

IEC 62841-3-8

Edition 1.0 2024-10
EXTENDED VERSION

INTERNATIONAL STANDARD

colour inside

This full version of IEC 62841-3-8:2024 includes the content of the references made to IEC 62841-1:2014

Electric motor-operated hand-held tools, transportable tools and lawn and garden machinery – Safety –
Part 3-8: Particular requirements for transportable single spindle vertical moulders

INTERNATIONAL
ELECTROTECHNICAL
COMMISSION

ICS 25.140.20

ISBN 978-2-8322-9874-9

Warning! Make sure that you obtained this publication from an authorized distributor.

® Registered trademark of the International Electrotechnical Commission

Documents
Document Sharing Hub

Full document details: IEC 62841-3-8 2024 EXV

CONTENTS

FOREWORD 5
INTRODUCTION to IEC 62841-1:2014 8
1 Scope 9
2 Normative references 10
3 Terms and definitions 15
4 General requirements 25
5 General conditions for the tests 25
6 Radiation, toxicity and similar hazards 27
7 Classification 29
8 Marking and instructions 29
9 Protection against access to live parts 41
10 Starting 43
11 Input and current 43
12 Heating 43
13 Resistance to heat and fire 48
14 Moisture resistance 49
15 Resistance to rusting 52
16 Overload protection of transformers and associated circuits 53
17 Endurance 53
18 Abnormal operation 54
19 Mechanical hazards 62
20 Mechanical strength 75
21 Construction 82
22 Internal wiring 92
23 Components 94
24 Supply connection and external flexible cords 99
25 Terminals for external conductors 105
26 Provision for earthing 107
27 Screws and connections 109
28 Creepage distances, clearances and distances through insulation 112
Annex A (normative) Measurement of creepage distances and clearances 119
Annex B (normative) Motors not isolated from the supply mains and having basic insulation not designed for the rated voltage of the tool 124
Annex C (normative) Leakage current 126
Annex D (normative) Electric strength 130
Annex E (informative) Methods of applying ISO 13849-1 to power tools 132
Annex F (informative) Rules for routine tests 134
Annex G Void 136
Annex H (normative) Determination of a low-power circuit 137
Annex I (informative) Measurement of noise and vibration emissions 138
Annex J Void 147
Annex K (normative) Battery tools and battery packs 148

AVA Documents
Document Sharing Hub
Full document details: IEC 62841-3-8 2024 EXV

Annex L (normative) Battery tools and battery packs provided with mains connection or non-isolated sources 168
Bibliography 187

Figure 101 – Example of curved work 22
Figure 102 – Example of single spindle vertical moulder 23
Figure 103 – Example of stopped straight work 23
Figure 104 – Example of straight work 24
Figure 105 – Examples of tenoning 25
Figure 106 – Run out test of spindle rings 66
Figure 107 – Table dimensions 67
Figure 108 – Table rings 68
Figure 109 – Example of curved work workpiece guiding and cutter block guarding systems 70
Figure 110 – Test probe 71
Figure 111 – Straight work – example of using pressure devices 73
Figure 112 – Definition of fence pressure pad deflection measuring point and directions of application of the test forces (horizontal view) 78
Figure 113 – Definition of fence pressure pad deflection measuring point and directions of application of the test forces (top view) 79
Figure 114 – Application of fence pressure pad test force "F" and measurement of displacement "f" (top view) 79
Figure 115 – Definition of table pressure pad deflection measuring point and directions of application of test forces (horizontal view) 79
Figure 116 – Definition of table pressure pad deflection measuring point and directions of application of test forces (vertical view) 80
Figure 117 – Definition of the adjustable guard deflection measuring points and directions of application of test forces 81
Figure 118 – Definition of guiding steady deflection measuring points and directions of application of test forces 82
Figure 1 – Test fingernail 116
Figure 2 – Flexing test apparatus 117
Figure 3 – Overload test of a class II armature 118
Figure A.1 – Clearance gap for parallel sided and V-shaped groove 120
Figure A.2 – Clearance gap for rib and uncemented joint with groove 121
Figure A.3 – Clearance gap for uncemented joint and diverging-sided groove 122
Figure A.4 – Clearance gap between wall and screw 123
Figure B.1 – Simulation of fault conditions 125
Figure C.1 – Diagram for leakage current measurement for single-phase connection and three-phase tools suitable for single-phase supply 128
Figure C.2 – Diagram for leakage current measurement for three-phase connection 129
Figure C.3 – Circuit of the leakage current meter 129
Figure H.1 – Example of an electronic circuit with low-power points 137
Figure I.1 – Test bench 145
Figure I.2 – Positions of a hand-held power tool and microphones for the hemispherical / cylindrical measurement surface 145
Figure I.3 – Microphone positions on a cubic measurement surface 146

AVA Documents
Document Sharing Hub

Figure I.4 – Directions of vibration measurement 146
Figure K.1 – Measurement of clearances 167
Figure L.1 – Measurement of clearances 186

Table 1 – Maximum normal temperature rises *(1 of 2)* 46
Table 2 – Maximum outside surface temperature rises 48
Table 3 – Maximum winding temperature 55
Table 4 – Required performance levels 61
Table 101 – Tool holder spindle and cutting tool dimensions 64
Table 102 – Table dimensions 67
Table 103 – Table rings 68
Table 5 – Impact energies 76
Table 6 – Test torques 77
Table 104 – Metal saw blade guard characteristics 77
Table 105 – Light alloy saw blade guard characteristics 77
Table 106 – Fences and table pressure pad displacement 80
Table 107 – Adjustable guard deflection 81
Table 108 – Guiding steady deflection 82
Table 7 – Switch trigger force 87
Table 8 – Minimum cross-sectional area and AWG sizes of supply cords 100
Table 9 – Pull and torque value 102
Table 10 – Quick-connect terminals for earthing conductors 107
Table 11 – Torque for testing screws and nuts 110
Table 12 – Minimum creepage distances and clearances 113
Table D.1 – Test voltages 130
Table F.1 – Test voltages for the electric strength test 135
Table I.101 – Noise test conditions for single vertical spindle moulders 143
Table K.1 – Minimum creepage distances and clearances between parts of opposite polarity 166
Table L.1 – Minimum creepage distances and clearances between parts of opposite polarity 185

Documents
Document Sharing Hub
Full document details: IEC 62841-3-8 2024 EXV

INTERNATIONAL ELECTROTECHNICAL COMMISSION

ELECTRIC MOTOR-OPERATED HAND-HELD TOOLS, TRANSPORTABLE TOOLS AND LAWN AND GARDEN MACHINERY – SAFETY –

Part 3-8: Particular requirements for transportable single spindle vertical moulders

FOREWORD

1) The International Electrotechnical Commission (IEC) is a worldwide organization for standardization comprising all national electrotechnical committees (IEC National Committees). The object of IEC is to promote international co-operation on all questions concerning standardization in the electrical and electronic fields. To this end and in addition to other activities, IEC publishes International Standards, Technical Specifications, Technical Reports, Publicly Available Specifications (PAS) and Guides (hereafter referred to as "IEC Publication(s)"). Their preparation is entrusted to technical committees; any IEC National Committee interested in the subject dealt with may participate in this preparatory work. International, governmental and non-governmental organizations liaising with the IEC also participate in this preparation. IEC collaborates closely with the International Organization for Standardization (ISO) in accordance with conditions determined by agreement between the two organizations.
2) The formal decisions or agreements of IEC on technical matters express, as nearly as possible, an international consensus of opinion on the relevant subjects since each technical committee has representation from all interested IEC National Committees.
3) IEC Publications have the form of recommendations for international use and are accepted by IEC National Committees in that sense. While all reasonable efforts are made to ensure that the technical content of IEC Publications is accurate, IEC cannot be held responsible for the way in which they are used or for any misinterpretation by any end user.
4) In order to promote international uniformity, IEC National Committees undertake to apply IEC Publications transparently to the maximum extent possible in their national and regional publications. Any divergence between any IEC Publication and the corresponding national or regional publication shall be clearly indicated in the latter.
5) IEC itself does not provide any attestation of conformity. Independent certification bodies provide conformity assessment services and, in some areas, access to IEC marks of conformity. IEC is not responsible for any services carried out by independent certification bodies.
6) All users should ensure that they have the latest edition of this publication.
7) No liability shall attach to IEC or its directors, employees, servants or agents including individual experts and members of its technical committees and IEC National Committees for any personal injury, property damage or other damage of any nature whatsoever, whether direct or indirect, or for costs (including legal fees) and expenses arising out of the publication, use of, or reliance upon, this IEC Publication or any other IEC Publications.
8) Attention is drawn to the Normative references cited in this publication. Use of the referenced publications is indispensable for the correct application of this publication.
9) IEC draws attention to the possibility that the implementation of this document may involve the use of (a) patent(s). IEC takes no position concerning the evidence, validity or applicability of any claimed patent rights in respect thereof. As of the date of publication of this document, IEC had not received notice of (a) patent(s), which may be required to implement this document. However, implementers are cautioned that this may not represent the latest information, which may be obtained from the patent database available at https://patents.iec.ch. IEC shall not be held responsible for identifying any or all such patent rights.

This extended version (EXV) of the official IEC Standard provides the user with the full content of the Standard.

IEC 62841-3-8:2024 EXV includes the content of IEC 62841-3-8:2024, and the references made to IEC 62841-1:2014.

The specific content of IEC 62841-3-8:2024 is displayed on a blue background.

Documents
Document Sharing Hub

Full document details: IEC 62841-3-8 2024 EXV

IEC 62841-3-8 has been prepared by IEC technical committee 116: Safety of motor-operated electric tools. It is an International Standard.

The text of this International Standard is based on the following documents:

Draft	Report on voting
116/814/FDIS	116/834/RVD

Full information on the voting for its approval can be found in the report on voting indicated in the above table.

The language used for the development of this International Standard is English.

This document was drafted in accordance with ISO/IEC Directives, Part 2, and developed in accordance with ISO/IEC Directives, Part 1 and ISO/IEC Directives, IEC Supplement, available at www.iec.ch/members_experts/refdocs. The main document types developed by IEC are described in greater detail at www.iec.ch/publications.

This document is to be used in conjunction with IEC 62841-1:2014.

This document supplements or modifies the corresponding clauses in IEC 62841-1, so as to convert it into the IEC Standard: Particular requirements for transportable single spindle vertical moulders.

Where a particular subclause of IEC 62841-1 is not mentioned in this document, that subclause applies as far as reasonable. Where this document states "addition", "modification" or "replacement", the relevant text in IEC 62841-1 is to be adapted accordingly.

The following print types are used:

– requirements: in roman type;
– test specifications: *in italic type;*
– terms defined in Clause 3: **in bold type***;*
– notes: in small roman type.

Subclauses, notes, tables and figures which are additional to those in IEC 62841-1 are numbered starting from 101.

Subclauses, notes, tables and figures in Annex K and Annex L which are additional to those in the main body of this document are numbered starting from 301.

A list of all parts in the IEC 62841 series, published under the general title: *Electric motor-operated hand-held tools, transportable tools and lawn and garden machinery – Safety*, can be found on the IEC website.

Documents
Document Sharing Hub

Full document details: IEC 62841-3-8 2024 EXV

The committee has decided that the contents of this document will remain unchanged until the stability date indicated on the IEC website under webstore.iec.ch in the data related to the specific document. At this date, the document will be

- reconfirmed,
- withdrawn, or
- revised.

NOTE The attention of National Committees is drawn to the fact that equipment manufacturers and testing organizations may need a transitional period following publication of a new, amended or revised IEC publication in which to make products in accordance with the new requirements and to equip themselves for conducting new or revised tests.

It is the recommendation of the committee that the content of this publication be adopted for implementation nationally not earlier than 36 months from the date of publication.

IMPORTANT – The "colour inside" logo on the cover page of this document indicates that it contains colours which are considered to be useful for the correct understanding of its contents. Users should therefore print this document using a colour printer.

Documents
Document Sharing Hub

Full document details: IEC 62841-3-8 2024 EXV

INTRODUCTION to IEC 62841-1:2014

Individual countries may wish to consider the application of this Part 1 of IEC 62841, so far as is reasonable, to tools not mentioned in an individual part of IEC 62841-2, IEC 62841-3 or IEC 62841-4 and to tools designed on new principles.

Examples of standards dealing with non-safety aspects of **hand-held tools, transportable tools and lawn and garden machinery** are

– standards dealing with EMC aspects;

– standards dealing with environmental aspects.

Documents
Document Sharing Hub

Full document details: IEC 62841-3-8 2024 EXV

ELECTRIC MOTOR-OPERATED HAND-HELD TOOLS, TRANSPORTABLE TOOLS AND LAWN AND GARDEN MACHINERY – SAFETY –

Part 3-8: Particular requirements for transportable single spindle vertical moulders

1 Scope

This International Standard deals with the safety of electric motor-operated or magnetically driven:

– **hand-held tools** (IEC 62841-2);
– **transportable tools** (IEC 62841-3);
– **lawn and garden machinery** (IEC 62841-4).

The above listed categories are hereinafter referred to as “tools” or “machines”.

The **rated voltage** is not more than 250 V for single-phase a.c. or d.c. tools, and 480 V for three-phase a.c. tools. The **rated input** is not more than 3 700 W.

The limits for the applicability of this standard for battery tools are given in K.1 and L.1.

This standard deals with the hazards presented by tools which are encountered by all persons in the **normal use** and reasonably foreseeable misuse of the tools.

Tools with electric heating elements are within the scope of this standard.

Requirements for motors not isolated from the supply, and having **basic insulation** not designed for the **rated voltage** of the tools, are given in Annex B. Requirements for rechargeable battery-powered motor-operated or magnetically driven tools and the battery packs for such tools are given in Annex K. Requirements for such tools that are also operated and/or charged directly from the mains or a non-isolated source are given in Annex L.

Hand-held electric tools, which can be mounted on a support or working stand for use as fixed tools without any alteration of the tool itself, are within the scope of this standard and such combination of a **hand-held tool** and a support is considered to be a **transportable tool** and thus covered by the relevant Part 3.

This standard does not apply to:

– tools intended to be used in the presence of explosive atmosphere (dust, vapour or gas);
– tools used for preparing and processing food;
– tools for medical purposes;

NOTE 1 IEC 60601 series covers a variety of tools for medical purposes.

– tools intended to be used with cosmetics or pharmaceutical products;
– heating tools;

NOTE 2 IEC 60335-2-45 covers a variety of heating tools.

– electric motor-operated household and similar electrical appliances;

NOTE 3 IEC 60335 series covers a variety of electric motor-operated household and similar electrical appliances.

AVA Documents Document Sharing Hub

Full document details: IEC 62841-3-8 2024 EXV

– electrical equipment for industrial machine-tools;

NOTE 4 IEC 60204 series deals with electrical safety of machinery.

– small low voltage transformer operated bench tools intended for model making, e.g. the making of radio controlled model aircraft or cars, etc.

NOTE 5 In the United States of America, the following conditions apply:

This standard deals with tools used in non-hazardous locations in accordance with the National Electrical Code, NFPA 70.

NOTE 6 In Canada, the following conditions apply:

This standard deals with tools used in non-hazardous locations in accordance with the Canadian Electric Code, Part 1, CSA C22.1, and General Requirements – Canadian Electrical Code, Part II, CAN/CSA-C22.2 No. 0.

This document applies to transportable **single spindle vertical moulders**, with a maximum **tool holder** diameter of 200 mm, designed to cut wood and analogue materials also covered with plastic laminate or edgings by hand-feed operation.

NOTE 101 **Single spindle vertical moulders** other than transportable are covered by ISO 19085-6:2024.

2 Normative references

The following documents, in whole or in part, are normatively referenced in this document and are indispensable for its application. For dated references, only the edition cited applies. For undated references, the latest edition of the referenced document (including any amendments) applies.

IEC 60061, *Lamp caps and holders together with gauges for the control of interchangeability and safety*, available at http://std.iec.ch/iec60061

IEC 60065:2001, *Audio, video and similar electronic apparatus – Safety requirements*[1]
Amendment 2:2010
Amendment 1:2005

IEC 60068-2-75:1997, *Environmental testing – Part 2-75: Tests – Test Eh: Hammer tests*

IEC/TR 60083, *Plugs and socket-outlets for domestic and similar general use standardized in member countries of IEC*

IEC 60085:2007, *Electrical insulation – Thermal evaluation and designation*

IEC 60127 (all parts), *Miniature fuses*

IEC 60227 (all parts), *Polyvinyl chloride insulated cables of rated voltages up to and including 450/750 V*

IEC 60238, *Edison screw lampholders*

IEC 60245 (all parts), *Rubber insulated cables – Rated voltages up to and including 450/750 V*

[1] There exists a consolidated version (Edition 7.2:2011) which includes IEC 60065:2001 and its Amendment 1 (2005) and Amendment 2 (2010).

AVA Documents
Document Sharing Hub
Full document details: IEC 62841-3-8 2024 EXV

IEC 60252-1, *AC motor capacitors – Part 1: General – Performance, testing and rating – Safety requirements – Guidance for installation and operation*

IEC 60320 (all parts), *Appliance couplers for household and similar general purposes*

IEC 60320-1, *Appliance couplers for household and similar general purposes – Part 1: General requirements*

IEC 60335-1:2010, *Household and similar electrical appliances – Safety – Part 1: General requirements*

IEC 60384-14, *Fixed capacitors for use in electronic equipment – Part 14: Sectional specification – Fixed capacitors for electromagnetic interference suppression and connection to the supply mains*

IEC 60417, *Graphical symbols for use on equipment,* available at http://www.graphical-symbols.info/graphical-symbols/equipment/db1.nsf/$enHome?OpenForm

IEC 60529:1989, *Degrees of protection provided by enclosures (IP Code)*[2]
Amendment 1:1999
Amendment 2:2013

IEC 60664-1, *Insulation coordination for equipment within low-voltage systems – Part 1: Principles, requirements and tests*

IEC 60695-2-11:2000, *Fire hazard testing – Part 2-11: Glowing/hot-wire based test methods – Glow-wire flammability test method for end-products*

IEC 60695-2-13:2010, *Fire hazard testing – Part 2-13: Glowing/hot-wire based test methods – Glow-wire ignition temperature (GWIT) test method for materials*

IEC 60695-10-2:2003, *Fire hazard testing – Part 10-2: Abnormal heat – Ball pressure test*

IEC 60695-11-10:2013, *Fire hazard testing – Part 11-10: Test flames – 50 W horizontal and vertical flame test methods*

IEC 60730-1:2010, *Automatic electrical controls for household and similar use – Part 1: General requirements*

IEC 60825-1:2007, *Safety of laser products – Part 1: Equipment classification and requirements*

IEC 60884 (all parts), *Plugs and socket-outlets for household and similar purposes*

IEC 60906-1, *IEC system of plugs and socket-outlets for household and similar purposes – Part 1: Plugs and socket-outlets 16 A 250 V a.c.*

IEC 60990:1999, *Methods of measurement of touch current and protective conductor current*

IEC 60998-2-1, *Connecting devices for low-voltage circuits for household and similar purposes – Part 2-1: Particular requirements for connecting devices as separate entities with screw-type clamping units*

---

[2] There exists a consolidated version (Edition 2.2:2013) which includes IEC 60529:1989 and its Amendment 1 (1999) and Amendment 2 (2013).

AVA Documents
Document Sharing Hub

Full document details: IEC 62841-3-8 2024 EXV

IEC 60998-2-2, *Connecting devices for low-voltage circuits for household and similar purposes – Part 2-2: Particular requirements for connecting devices as separate entities with screwless-type clamping units*

IEC 60999-1:1999, *Connecting devices – Electrical copper conductors – Safety requirements for screw-type and screwless-type clamping units – Part 1: General requirements and particular requirements for clamping units for conductors from 0,2 mm^2 up to 35 mm^2 (included)*

IEC 61000-4-2:2008, *Electromagnetic compatibility (EMC) – Part 4-2: Testing and measurement techniques – Electrostatic discharge immunity test*

IEC 61000-4-3:2006, *Electromagnetic compatibility (EMC) – Part 4-3: Testing and measurement techniques – Radiated, radio-frequency, electromagnetic field immunity test*[3]
Amendment 1:2007
Amendment 2:2010

IEC 61000-4-4:2012, *Electromagnetic compatibility (EMC) – Part 4-4: Testing and measurement techniques – Electrical fast transient/burst immunity test*

IEC 61000-4-5:2005, *Electromagnetic compatibility (EMC) – Part 4-5: Testing and measurement techniques – Surge immunity test*

IEC 61000-4-6:2008, *Electromagnetic compatibility (EMC) – Part 4-6: Testing and measurement techniques – Immunity to conducted disturbances, induced by radio-frequency fields*

IEC 61000-4-11:2004, *Electromagnetic compatibility (EMC) – Part 4-11: Testing and measurement techniques – Voltage dips, short interruptions and voltage variations immunity tests*

IEC 61032:1997, *Protection of persons and equipment by enclosures – Probes for verification*

IEC 61056-1, *General purpose lead-acid batteries (valve-regulated types) – Part 1: General requirements, functional characteristics – Methods of test*

IEC 61058-1:2000, *Switches for appliances – Part 1: General requirements*[4]
Amendment 1:2001
Amendment 2:2007

IEC 61210, *Connecting devices – Flat quick-connect terminations for electrical copper conductors – Safety requirements*

IEC 61540:1997, *Electrical accessories – Portable residual current devices without integral overcurrent protection for household and similar use (PRCDs)*[5]
Amendment 1:1998

IEC 61558-1, *Safety of power transformers, power supplies, reactors and similar products – Part 1: General requirements and tests*

---

[3] There exists a consolidated version (Edition 3.2:2010) which includes IEC 61000-4-3:2006 and its Amendment 1 (2007) and Amendment 2 (2010).

[4] There exists a consolidated version (Edition 3.2:2008) which includes IEC 61058-1:2000 and its Amendment 1 (2001) and Amendment 2 (2007).

[5] There exists a consolidated version (Edition 1.1:1999) which includes IEC 61540:1997 and its Amendment 1 (2001).

AVA Documents
Document Sharing Hub

Full document details: IEC 62841-3-8 2024 EXV

IEC 61558-2-4, *Safety of transformers, reactors, power supply units and similar products for supply voltages up to 1 100 V – Part 2-4: Particular requirements and tests for isolating transformers and power supply units incorporating isolating transformers*

IEC 61558-2-6, *Safety of transformers, reactors, power supply units and similar products for supply voltages up to 1 100 V – Part 2-6: Particular requirements and tests for safety isolating transformers and power supply units incorporating safety isolating transformers*

IEC 61558-2-16, *Safety of transformers, reactors, power supply units and similar products for supply voltages up to 1 100 V – Part 2-16: Particular requirements and tests for switch mode power supply units and transformers for switch mode power supply units*

IEC 61951-1, *Secondary cells and batteries containing alkaline or other non-acid electrolytes – Portable sealed rechargeable single cells – Part 1: Nickel-cadmium*

IEC 61951-2, *Secondary cells and batteries containing alkaline or other non-acid electrolytes – Portable sealed rechargeable single cells – Part 2: Nickel-metal hydride*

IEC 61960, *Secondary cells and batteries containing alkaline or other non-acid electrolytes – Secondary lithium cells and batteries for portable applications*

IEC 61984, *Connectors – Safety requirements and tests*

IEC 62133, *Secondary cells and batteries containing alkaline or other non-acid electrolytes – Safety requirements for portable sealed secondary cells, and for batteries made from them, for use in portable applications*

IEC 62233, *Measurement methods for electromagnetic fields of household appliances and similar apparatus with regard to human exposure*

IEC 62471, *Photobiological safety of lamps and lamp systems*

IEC/TR 62471-2:2009, *Photobiological safety of lamps and lamp systems – Part 2: Guidance on manufacturing requirements relating to non-laser optical radiation safety*

IEC 62841-1:2014, *Electric motor-operated hand-held tools, transportable tools and lawn and garden machinery – Safety – Part 1: General requirements*

ISO 286-2:2010, *Geometrical product specifications (GPS) – ISO code system for tolerances on linear sizes – Part 2: Tables of standard tolerance classes and limit deviations for holes and shafts*

ISO 1463, *Metallic and oxide coatings – Measurement of coating thickness – Microscopical method*

ISO 2178, *Non-magnetic coatings on magnetic substrates – Measurement of coating thickness – Magnetic method*

ISO 2768-1, *General tolerances – Part 1: Tolerances for linear and angular dimensions without individual tolerance indications*

ISO 3744, *Acoustics – Determination of sound power levels and sound energy levels of noise sources using sound pressure – Engineering methods for an essentially free field over a reflecting plane*

Documents
Document Sharing Hub

Full document details: IEC 62841-3-8 2024 EXV

ISO 3864-2, *Graphical symbols – Safety colours and safety signs – Part 2: Design principles for product safety labels*

ISO 3864-3, *Graphical symbols – Safety colours and safety signs – Part 3: Design principles for graphical symbols for use in safety signs*

ISO 4871:1996, *Acoustics – Declaration and verification of noise emission values of machinery and equipment*

ISO 5347 (all parts), *Methods for the calibration of vibration and shock pick-ups*

ISO 5349-1, *Mechanical vibration – Measurement and evaluation of human exposure to hand-transmitted vibration – Part 1: General requirements*

ISO 5349-2, *Mechanical vibration – Measurement and evaluation of human exposure to hand-transmitted vibration – Part 2: Practical guidance for measurement in the workplace*

ISO 7000:2012, *Graphical symbols for use on equipment – Index and synopsis*

ISO 7010, *Graphical symbols – Safety colours and safety signs – Registered safety signs*

ISO 7574-4, *Acoustics – Statistical methods for determining and verifying stated noise emission values of machinery and equipment – Part 4: Methods for stated values for batches of machines*

ISO 8041, *Human response to vibration – Measuring instrumentation*

ISO 9772:2012, *Cellular plastics – Determination of horizontal burning characteristics of small specimens subjected to a small flame*

ISO 11201, *Acoustics – Noise emitted by machinery and equipment – Determination of emission sound pressure levels at a work station and at other specified positions in an essentially free field over a reflecting plane with negligible environmental corrections*

ISO 11203, *Acoustics – Noise emitted by machinery and equipment – Determination of emission sound pressure levels at a work station and at other specified positions from the sound power level*

ISO 12100, *Safety of machinery – General principles for design – Risk assessment and risk reduction*

ISO 13849-1, *Safety of machinery – Safety-related parts of control systems – Part 1: General principles for design*

ISO 13850, *Safety of machinery – Emergency stop – Principles for design*

ISO/TR 11690-3, *Acoustics – Recommended practice for the design of low-noise workplaces containing machinery – Part 3: Sound propagation and noise prediction in workrooms*

ISO 16063-1, *Methods for the calibration of vibration and shock transducers – Part 1: Basic concepts*

EN 12096, *Mechanical vibration – Declaration and verification of vibration emission values*

ASTM B 258, *Standard specification for standard nominal diameters and cross-sectional areas of AWG sizes of solid round wires used as electrical conductors*

AVA Documents
Document Sharing Hub

Full document details: IEC 62841-3-8 2024 EXV

UL 969, *Standard for marking and labeling systems*

NOTE 1 In the United States of America, the following normative reference applies:

US, Code of Federal Regulations (CFR) Title 21, *Food and Drugs*.

NOTE 2 In Canada, the following normative reference applies:

C.R.C., c. 1370, Radiation Emitting Devices Regulations

NOTE 3 In Europe (EN 62841-1), the following normative references apply:

CR 1030-1, *Hand-arm vibration – Guidelines for vibration hazards reduction – Part 1: Engineering methods by design of machinery*

EN ISO 11688-1, *Acoustics – Recommended practice for the design of low-noise machinery and equipment – Part 1: Planning (ISO/TR 11688-1)*

3 Terms and definitions

For the purposes of this document, the following terms and definitions apply.

Where the terms voltage and current are used, they imply the r.m.s. values, unless otherwise specified.

Where in this standard the expressions “with the aid of a tool”, “without the aid of a tool”, and “requires the use of a tool”, are used, the word “tool” means a hand tool, for example a screwdriver, which may be used to operate a screw or other fixing means.

3.1
accessible part
conductive part or surface of insulating materials that can be touched by means of the test probe B of IEC 61032:1997

3.2
accessory
device that is attached only to the output mechanism of the tool

3.3
adjustable guard
guard which is adjustable as a whole or which incorporates adjustable part(s). For manually adjustable guards, the adjustment remains fixed during a particular operation

3.4
all-pole disconnection
disconnection of all supply conductors except the protective earthing (grounding) conductor by a single initiating action

3.5
attachment
device attached to the housing or other component of the tool and which may or may not be attached to the output mechanism and does not modify the **normal use** of the tool within the scope of this standard

3.6
basic insulation
insulation applied to **live parts** to provide protection against electric shock. Insulation applied to **live parts** not intended to provide electric shock protection is considered to be insulation for functional purposes, such as magnet wire insulation

Documents
Document Sharing Hub
Full document details: IEC 62841-3-8 2024 EXV

3.7
battery
assembly of one or more **cells** intended to provide electrical current to the tool

3.8
class I tool
tool in which protection against electric shock does not rely on basic, double or **reinforced insulation** only, but which includes an additional safety precaution in that conductive **accessible parts** are connected to the protective earthing conductor in the fixed wiring of the installation in such a way that conductive **accessible parts** cannot become live in the event of a failure of the **basic insulation**

Note 1 to entry: Also considered as **class I tools** are tools with **double insulation** and/or **reinforced insulation** throughout, but also having an earthing terminal or earthing contact.

3.9
class II tool
tool in which protection against electric shock does not rely on **basic insulation** only, but in which additional safety precautions, such as **double insulation** or **reinforced insulation**, are provided, there being no provision for protective earthing or reliance upon installation conditions

3.10
class III tool
tool in which protection against electric shock relies on supply at **safety extra-low voltage**, and in which voltages higher than those of **safety extra-low voltages** are not generated

3.11
class II construction
part of a tool for which protection against electric shock relies upon **double insulation** or **reinforced insulation**

3.12
class III construction
part of a tool for which protection against electric shock relies upon **safety extra-low voltage**, and in which voltages higher than those of **safety extra-low voltage**s are not generated

3.13
clearance
shortest distance between two conductive parts, or between a conductive part and the outer surface of the enclosure, considered as though metal foil were pressed into contact with accessible surfaces of insulating material, measured through air

Note 102 to entry: Examples of **clearances** are given in Annex A.

3.14
control device
device used by the user to adjust and/or regulate an electrical or mechanical function of the tool

3.15
creepage distance
shortest path between two conductive parts, or between a conductive part and the outer surface of the enclosure, considered as though metal foil were pressed into contact with accessible surfaces of insulating material, measured along the surface of the insulating material

Note 1 to entry: Examples of **creepage distances** are given in Annex A.

Documents
Document Sharing Hub
Full document details: IEC 62841-3-8 2024 EXV

3.16
detachable part
part which can be removed or opened without the aid of a tool, or a part which is removed in accordance with the instruction for use, except externally accessible brush caps, even if removal requires the use of a tool

Note 1 to entry: A non-detachable part is covered by the requirements of 21.22.

3.17
double insulation
insulation system comprising both **basic insulation** and **supplementary insulation**

3.18
electronic circuit
circuit incorporating at least one **electronic component**

3.19
electronic component
part in which conduction is achieved principally by electrons moving through a vacuum, gas or semiconductor, with the exclusion of neon indicators

Note 1 to entry: Examples of **electronic components** are diodes, transistors, triacs and monolithic integrated circuits. Resistors, capacitors and inductors are not considered **electronic components**.

3.20
explosion
failure that occurs, when an enclosure opens violently and major components are forcibly expelled in a manner that could result in injury

3.21
extra-low voltage
voltage supplied from a source within the tool and, which, when the tool is supplied at **rated voltage**, does not exceed 50 V between conductors and between conductors and earth

3.22
fixed guard
guard affixed in such a manner (e.g. by screws, nuts, welding) that it can only be opened or removed with the use of tools or by destruction of the affixing means

3.23
guard
physical barrier, designed as part of the tool, to provide protection

3.24
hand-held tool
tool intended to do mechanical work, with or without provisions for mounting on a support, and so designed that the motor and the machine form an assembly which can easily be brought to the place of operation, and which is either held or supported by hand or suspended during operation

Note 1 to entry: **Hand-held tools** include tools provided with a flexible shaft, the motor being either fixed or portable.

3.25
inherent operating cycle
repetitive operation of a tool designed in such a way that the complete cycle duration cannot be altered by the operator

Documents
Document Sharing Hub
Full document details: IEC 62841-3-8 2024 EXV

3.26
interconnection cord
external flexible cord provided for electrical connections between two parts of a tool

3.27
lawn and garden machinery
tool for garden maintenance

3.28
liquid system
system that employs water or a water-based liquid from an external or integral supply that is used to perform the intended function of the tool

3.29
live part
any conductor or conductive part intended to be energized in **normal use**, including a neutral conductor

3.30
mean time to dangerous failure
$MTTF_d$
expectation of the mean time to dangerous failure

3.31
momentary power switch
power switch that does not remain in the “on” position when the actuating device is released

3.32
non-self-resetting thermal cut-out
thermal cut-out which requires a manual operation for resetting, or replacement of a part, in order to restore the current

Note 1 to entry: Manual operation also includes operation of the **power switch**.

3.33
non-isolated source
voltage source in which the output is not isolated from the mains supply by means of a **safety isolating transformer**

3.34
normal operation
conditions under which the tool is operated in **normal use** when it is connected to the power supply

3.35
normal use
use of a tool for which it is designed, taking into account the manufacturer’s instructions

3.36
power switch
device that electrically activates the primary function of the tool in the “on” position and deactivates the same function of the tool in its “off” position

3.37
protective device
device, the operation of which prevents a hazardous situation under abnormal operation conditions

Documents
Document Sharing Hub
Full document details: IEC 62841-3-8 2024 EXV

3.38
protective impedance
impedance connected between **live parts** and accessible conductive parts, and of value so that the current is limited to a safe value

3.39
rated current
current assigned to the tool by the manufacturer

3.40
rated frequency
frequency assigned to the tool by the manufacturer

3.41
rated frequency range
frequency range assigned to the tool by the manufacturer, expressed by its lower and upper limits

3.42
rated input
input in watts assigned to the tool by the manufacturer

3.43
rated no-load speed
no-load speed assigned to the tool by the manufacturer

3.44
rated voltage
voltage assigned to the tool by the manufacturer. For three-phase supply, it is the voltage between phases

3.45
rated voltage range
voltage range assigned to the tools by the manufacturer, expressed by its lower and upper limits

3.46
reinforced insulation
insulation of **live parts** which provides a degree of protection against electric shock equivalent to **double insulation**

Note 1 to entry: Examples of **reinforced insulation** are a single layer or several layers which cannot be tested singly as **basic insulation** or **supplementary insulation**.

3.47
residual current device
RCD
device intended to detect a diversion of current from a circuit in a way that may expose the user to an electric shock; in such conditions the device opens the circuit

Note 1 to entry: Such a device is also known as portable **residual current device** (PRCD), ground fault circuit interrupter (GFCI) or earth leakage circuit breaker (ELCB).

3.48
safety critical function
SCF
function(s) required by this standard, the loss of which would cause the tool to function in such a manner as to expose the user to a risk that is in excess of the risk that is permitted by this standard under abnormal conditions

Documents
Document Sharing Hub
Full document details: IEC 62841-3-8 2024 EXV

3.49
safety extra-low voltage
voltage not exceeding a peak value of 42,4 V between conductors and between conductors and earth, the no-load voltage not exceeding a peak value of 50 V, in an electric circuit which has galvanic separation from the supplying electric power system by such means as a **safety isolating transformer** or a converter with separate windings, the insulation of which complies with **double insulation** or **reinforced insulation** requirements

3.50
safety isolating transformer
transformer, the input winding of which is electrically separated from the output winding by an insulation at least equivalent to **double insulation** or **reinforced insulation**, and which is intended to supply a distribution circuit, a tool or other equipment at **safety extra-low voltage**

3.51
self-resetting thermal cut-out
thermal cut-out which automatically restores the current after the relevant part of the tool has cooled down to a given value

3.52
supplementary insulation
independent insulation applied in addition to the **basic insulation**, in order to provide protection against electric shock in the event of a failure of the **basic insulation**

3.53
supply cord
flexible cord, for supply purposes, which is fixed to the tool

3.54
temperature limiter
temperature-sensing device, the operating temperature of which may be either fixed or adjustable, and which, during **normal operation**, operates by opening or closing a circuit when the temperature of the controlled part reaches a predetermined value

Note 1 to entry: This does not reverse this operation of opening or closing a circuit during the **normal operation** of the tool.

3.55
thermal cut-out
device which, during abnormal operation, limits the temperature of the controlled part by automatically opening the circuit, or by reducing the current, the setting of which cannot be altered by the user

3.56
thermal link
thermal cut-out which operates only once, and then requires partial or complete replacement

3.57
thermostat
temperature-sensing device, the operating temperature of which may be either fixed or adjustable; and which, during **normal operation**, keeps the temperature of the controlled part between certain limits by automatically opening and closing a circuit

3.58
transportable tool
tool that has the following characteristics:

a) intended to be taken to various designated working areas. The tool performs work on the material that is either brought to the tool, the tool is mounted to the workpiece or the tool is placed in proximity of the workpiece;

AVA Documents
Document Sharing Hub
Full document details: IEC 62841-3-8 2024 EXV

b) intended to be moved by one or two people, with or without simple devices to facilitate transportation, e.g. handles, wheels and the like;

c) used in a stationary position set up on a bench, table, floor or incorporating a device that performs the function of a bench or table, with or without fixing, e.g. fast clamping devices, bolting and the like, or mounted to the workpiece;

d) used under the control of an operator;

e) either the workpiece or the tool is fed or introduced manually;

f) not intended for continuous production or production line use;

g) if mains operated, supplied with a flexible **supply cord** and plug

3.59
type X attachment
method of attachment of the **supply cord** specified by the manufacturer so that it can easily be replaced

3.60
type Y attachment
method of attachment of the **supply cord** such that any replacement is intended to be made by the manufacturer, its service agent or similar qualified person

3.61
type Z attachment
method of attachment of the **supply cord** so that it cannot be replaced without breaking or destroying the tool

3.62
user maintenance
maintenance operation(s) which are intended to be carried out by the user in accordance with the instruction manual

3.63
working voltage
maximum voltage, without the effect of transient voltages, to which the part under consideration is subjected when the tool is supplied at its **rated voltage** and operating with **rated input** or **rated current**

3.101
anti-kickback device
device which either reduces the possibility of **kickback** or arrests the motion during **kickback** of the workpiece, parts of it or part of the tool

3.102
curved work
machining of a curve on a workpiece by having one side in contact with the table (or if held in a jig in contact with the table) and the other in contact with the vertical reference of a steady or ring guide when using a jig

Note 101 to entry: See Figure 101.

Documents
Document Sharing Hub

Full document details: IEC 62841-3-8 2024 EXV

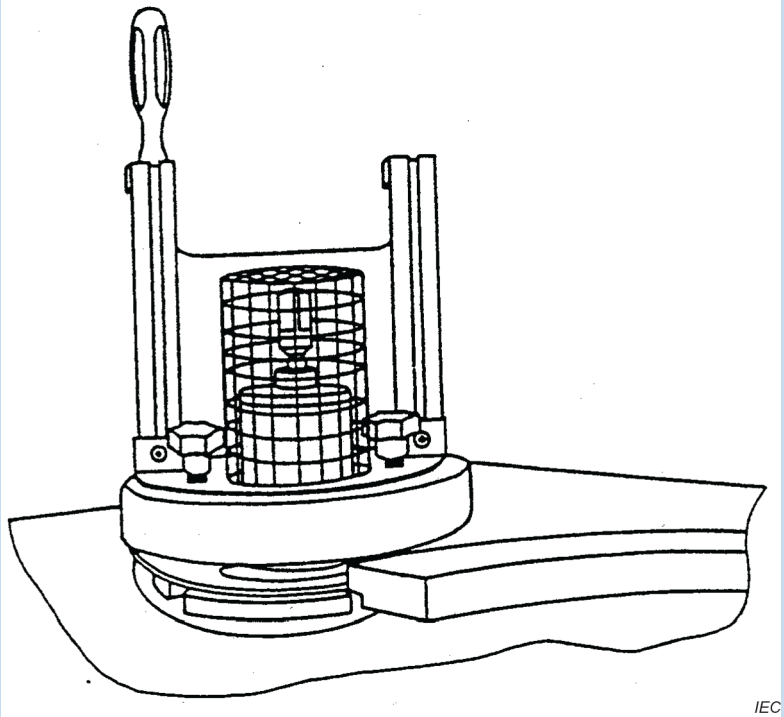

Figure 101 – Example of curved work

3.103
cutter block
rotating assembly consisting of the **tool holder** and the cutting tool

3.104
kickback
unexpected movement of the workpiece, parts of it or part of the tool opposite to the direction of feed during processing

3.105
removable spindle
spindle capable of being changed without removing the bearings

3.106
single spindle vertical moulder
hand-fed tool with a cutting accessory on a rotating spindle used on a table or similar support which is intended to carry out work in a stationary position, capable of being lifted by hand by one person and having

– a single spindle (fixed or removable) whose position is fixed during machining;
– a horizontal table; and
– a motor that is integral to the tool.

Note 101 to entry: The tool can have any of the following additional features:

a) the facility for the spindle to be raised and lowered through the table;
b) the facility for fitting an additional manually operated sliding table;
c) the facility to tilt the spindle.

Note 102 to entry: **Single spindle vertical moulders** are also known as shapers.

Note 103 to entry: See Figure 102.

Documents
Document Sharing Hub
Full document details: IEC 62841-3-8 2024 EXV

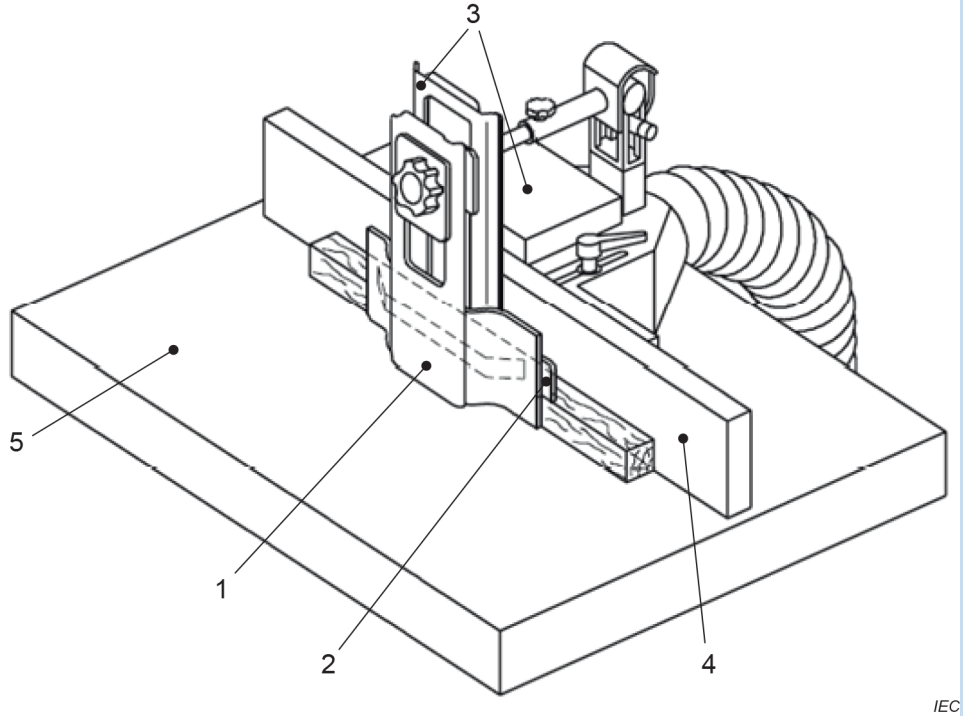

Key

1 table

2 pressure pads

3 **guard**

4 **guard**

5 parallel fence

Figure 102 – Example of single spindle vertical moulder

3.107
stopped straight work
machining of only a part of the workpiece length

Note 101 to entry: See Figure 103.

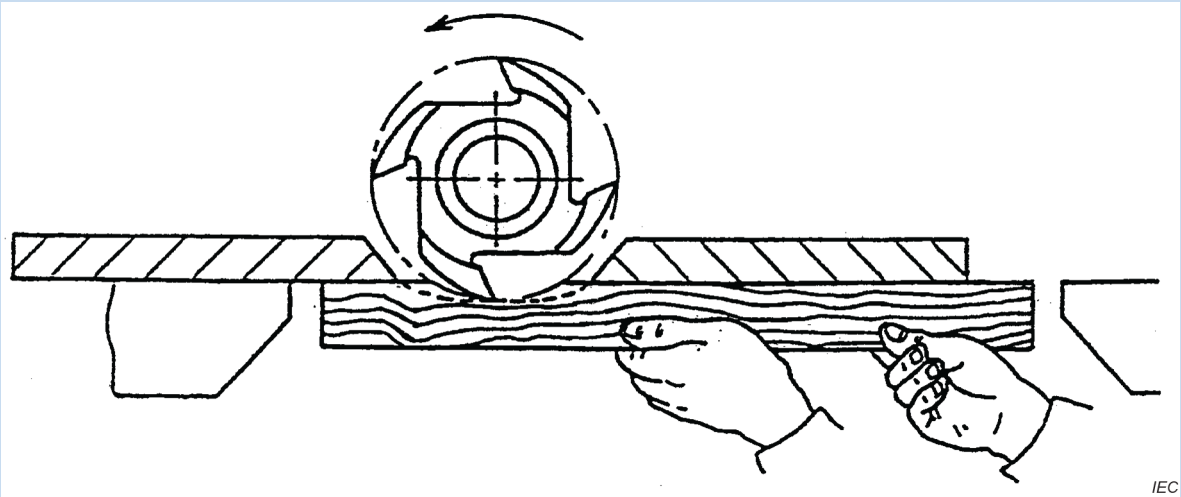

Figure 103 – Example of stopped straight work

Documents
Document Sharing Hub
Full document details: IEC 62841-3-8 2024 EXV

3.108
straight work
shaping of a workpiece with one face in contact with the table and a second with the fence, and where the work starts at one end of the workpiece and continues through to the other end

Note 101 to entry: See Figure 104.

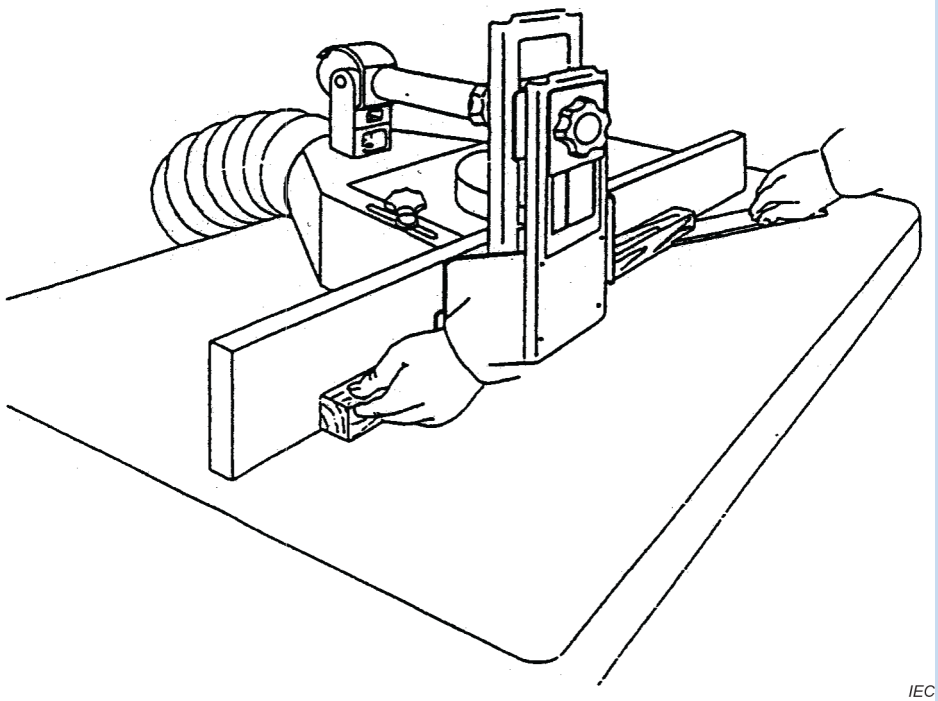

Figure 104 – Example of straight work

3.109
tenoning
machining of projections and slots on the end of a workpiece to facilitate the joining of workpieces, including profiled tenons

Note 101 to entry: See Figure 105.

Documents
Document Sharing Hub
Full document details: IEC 62841-3-8 2024 EXV

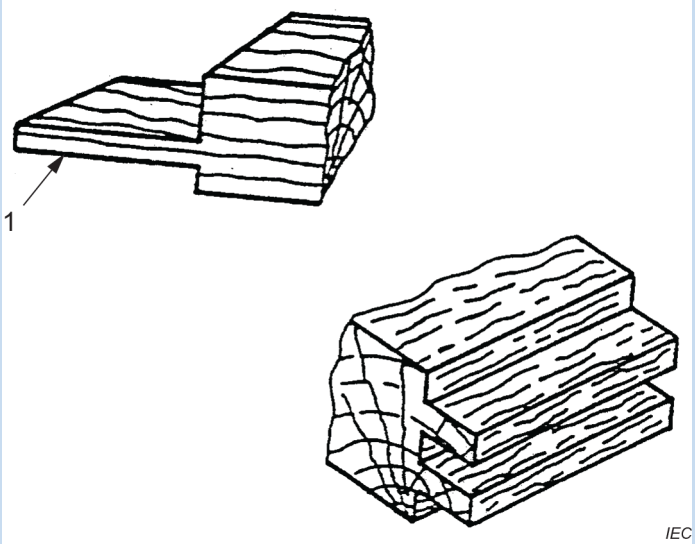

Key

1 tenon

Figure 105 – Examples of tenoning

3.110
tool holder
single piece spindle or **removable spindle** to which the cutting tool is fixed

4 General requirements

Tools shall be so constructed that they operate safely so as to cause no danger to persons or surroundings.

Tools that have clearly separate modes of operation shall comply separately with the requirements applicable to each specific mode of operation.

Multifunction tools shall comply separately with the applicable part of IEC 62841-2, IEC 62841-3 or IEC 62841-4 and shall take into account any other hazards due to the combination of functions.

NOTE In Europe (EN 62841-1), the above paragraph is not applicable.

Compliance is checked by fulfilling the relevant requirements and carrying out the relevant tests of this standard.

5 General conditions for the tests

5.1 *Tests according to this standard are type tests. General test conditions in Clause 5 apply unless otherwise specified in this standard.*

NOTE Annex F shows an example of routine tests.

5.2 *The tests are made on separate samples. However, at the manufacturer's discretion, fewer samples may be used.*

The cumulative stress resulting from successive tests on ***electronic circuits*** *is to be avoided. It may be necessary to replace components or to use additional samples.*

Documents
Document Sharing Hub
Full document details: IEC 62841-3-8 2024 EXV

If several tests are conducted on a single sample, then the results shall not be affected by previous tests.

5.3 *If it is evident from the construction of the tool that a particular test is not applicable, the test is not made.*

5.4 *The tests are carried out with the tool, and/or any movable part of it, placed in the most unfavourable position that may occur in* ***normal use****.*

5.5 *Tools provided with controls or switching devices are tested with these controls or devices adjusted to their most unfavourable settings, if the setting can be altered by the user. Electronic speed* ***control devices*** *are set for the highest speed.*

If the adjusting means of the control is accessible without the aid of a tool, 5.5 applies whether the setting can be altered by hand or with the aid of a tool. If the adjusting means is not accessible without the aid of a tool, and if the setting is not intended to be altered by the user, 5.5 does not apply.

Adequate sealing is regarded as preventing alteration of the setting by the user.

5.6 *The tests are made in a draught-free location and at an ambient temperature of (20 ± 5) °C.*

If the temperature attained by any part is limited by a temperature sensitive device, the ambient temperature is, in case of doubt, maintained at (23 ± 2) °C.

5.7 *The test conditions related to frequency and voltage are specified in 5.7.1 to 5.7.3.*

5.7.1 *Tools for a.c. only are tested with a.c. at* ***rated frequency****, if marked, and those for a.c./d.c. are tested with the most unfavourable supply.*

Tools for a.c. which are not marked with ***rated frequency****, or marked with a* ***rated frequency range*** *of 50 Hz to 60 Hz or with 50/60 Hz, are tested with either 50 Hz or 60 Hz, whichever is the most unfavourable, unless the tool employs only series motors, in which case either frequency may be used.*

5.7.2 *Tools having more than one* ***rated voltage*** *or having a* ***rated voltage range*** *are tested at the highest voltage.*

5.7.3 *For tests that require a value for* ***rated current*** *and with tools where there is no marked* ***rated current****, the value of the* ***rated current*** *is substituted by the current measured when the tool is operated at* ***rated input*** *at the lowest* ***rated voltage*** *or the lower value of the* ***rated voltage range****.*

5.8 *When alternative heating elements or* ***attachments*** *are made available for the tool by its manufacturer, the tool is tested with those heating elements or* ***attachments*** *which give the most unfavourable results.*

5.9 *Tools are tested with the specified flexible* ***supply cord*** *connected to the tool.*

5.10 *If* ***class I tools*** *have* ***accessible parts*** *which are not connected to an earthing terminal or earthing contact, and are not separated from* ***live parts*** *by an intermediate metal part which is connected to an earthing terminal or earthing contact, such parts are checked for compliance with the appropriate requirements specified for* ***class II construction****.*

Documents
Document Sharing Hub

Full document details: IEC 62841-3-8 2024 EXV

5.11 *If **class I tools** or **class II tools** have parts operating at **safety extra-low voltage**, such parts are checked for compliance with the appropriate requirements specified for **class III tools**.*

5.12 *When testing **electronic circuits**, the supply is to be free from those perturbations from external sources that can influence the results of the tests.*

5.13 *If, in **normal use**, a heating element, if any, cannot be operated unless the motor is running, the element is tested with the motor running. If the heating element can be operated without the motor running, the element is tested with or without the motor running, whichever is the more unfavourable. Heating elements incorporated in the tool are connected to a separate supply unless otherwise specified.*

5.14 *For **attachments** performing a function which is within the scope of one of the relevant parts of IEC 62841-2, IEC 62841-3 or IEC 62841-4, the tests are made in accordance with that part of IEC 62841-2, IEC 62841-3 or IEC 62841-4.*

5.15 *If a torque is to be applied, the method of loading is chosen so as to avoid additional stresses, such as those caused by side thrust. Additional loads necessary for the correct operation of the tool are, however, taken into consideration.*

If a brake is used for applying a load, it must be applied gradually to assure that the starting current does not affect the test. Modification of output means for purpose of loading is permitted for the connection to a brake.

5.16 *Tools intended to be operated at **safety extra-low voltage** are tested using a supply transformer intended to be used with the tool.*

5.17 *If a requirement is based upon the mass of the tool, the mass shall be determined without **supply cord,** if any, and without tool bits or **accessories**, but with all equipment and **attachments** needed for **normal use**. Details of the required **accessories**, equipment and **attachments** are given in the relevant part of IEC 62841-2, IEC 62841-3 or IEC 62841-4.*

*If the tool is supplied with more than one **accessory**, equipment or **attachment**, the heaviest configuration shall be used to determine the mass.*

*The mass of the tool includes the **tool holder** and the fences.*

5.18 *If linear and angular dimensions are specified without a tolerance, ISO 2768-1, class "c" is applicable.*

5.19 *All electrical measurements shall be made with a maximum measurement error of 5 %.*

Instruments for measuring voltage shall have an input resistance of at least 1 MΩ with a maximum parallel capacitance of 150 pF.

5.20 *Thermal equilibrium is considered achieved when the total deviation of three successive temperature rise readings, taken at 3 min intervals, does not exceed 4 K. For induction motors, a measurement time of 1 h is considered sufficient.*

For motors, thermal equilibrium may be evaluated by measuring the temperature of the stator laminations.

6 Radiation, toxicity and similar hazards

6.1 Tools shall not emit harmful radiation, or present a toxic or similar hazard.

Documents
Document Sharing Hub

Full document details: IEC 62841-3-8 2024 EXV

Compliance is checked by the test, given in the relevant part of IEC 62841-2, IEC 62841-3 or IEC 62841-4, where necessary.

NOTE Previous studies have shown that the level of electromagnetic fields (EMF) emitted by power tools and garden machinery, measured in accordance with IEC 62233, is far below the applicable limits, provided the sole significant source of EMF is the motor, which is typically a universal, DC (with or without brushes), induction or solenoid motor. Therefore, a general measurement in accordance with IEC 62233 was regarded as not necessary.

6.2 If the tool is fitted with a laser to indicate a cutting line or the like, the laser class shall be 2M or lower, according to IEC 60825-1:2007.

In addition, the tool shall be marked with the symbol(s) as required by IEC 60825-1:2007 for the relevant laser class.

Compliance is checked by inspection.

6.3 If a tool is fitted with non-coherent light sources, users of tools shall be cautioned as to the risk of potential photo-biological harm, if such harm exists.

Depending on the type of light source, the requirements of 6.3.1, 6.3.2 or 6.3.3 apply.

6.3.1 Visible light indicators (pilot lamps) and Infrared sources used for signalling and communication are considered to have no risk of photo-biological harm and require no marking.

Compliance is checked by inspection.

6.3.2 Tools emitting visible light from electroluminescent, incandescent or LED sources are considered to be for short term, non-general light services use where exposure is both incidental and intermittent.

Tools emitting light from these sources shall be marked with one of the following:

– "**CAUTION** Do not stare at operating lamp", or
– symbol IEC 60417-6041 (2010-08).

The marking may be omitted, if it can be demonstrated that the emitted light presents no reasonable risk of harm.

The emitted light is considered to present no reasonable risk or harm, if either

– the light emission at a distance of 200 mm along any direction of the tool is below 500 Lux; or
– the luminance light emission is less than 10 000 cd/m² in the range of visible light; or
– the light source (if not focused by external optics) is in Risk Group 1 or lower evaluated by the methods of IEC 62471; or
– the tool itself is evaluated by the methods of IEC 62471 and found to be in Risk Group 1 or lower.

Compliance is checked by measurement and by the methods specified in IEC 62471.

6.3.3 For light derived by sources other than those mentioned in 6.3.2, the product shall be evaluated by the methods of IEC 62471 and the markings shall be guided by 5.4 of IEC/TR 62471-2:2009.

Compliance is checked by inspection and by the methods specified in IEC 62471.

Documents
Document Sharing Hub
Full document details: IEC 62841-3-8 2024 EXV

7 Classification

7.1 Tools shall be of one of the following classes with respect to protection against electric shock:

class I, **class II**, **class III**.

Compliance is checked by inspection and by the relevant tests.

7.2 Tools shall have the appropriate degree of protection against harmful ingress of water according to IEC 60529:2013. If a degree other than IPX0 is required this shall be specified in the relevant part of IEC 62841-2, IEC 62841-3 or IEC 62841-4.

Compliance is checked by inspection and by the relevant tests.

8 Marking and instructions

8.1 Tools shall be marked with rating information as follows:

– **rated voltage**(s) or **rated voltage range**, in volts. Tools for star-delta connection shall be clearly marked with the two **rated voltages** (for example 230 Δ/ 400 Y). A tool that complies with this standard for a voltage range, may also be marked with any single voltage or smaller voltage range within that range;
– symbol for nature of supply, unless the **rated frequency(ies)** or **rated frequency range** is marked. The symbol for nature of supply shall be placed next to the marking for **rated voltage**;
– **rated input**, in watts or **rated current**, in amperes. The **rated input** or **rated current** to be marked on the tool is the total maximum input or current that can be drawn from external circuit at the same time. If a tool has alternative components which can be selected by a **control device**, the **rated input** or **rated current** is that corresponding to the highest loading possible;
– symbol for **class II construction**, for **class II tools** only;
– IP number according to degree of protection against ingress of water other than IPX0. If the first numeral for the IP numbering is omitted, the omitted numeral shall be replaced by the letter X, for example IPX5.

Tools shall also be marked with:

– the maximum and minimum no-load speed of the **tool holder**; and
– the maximum diameter of the cutting tool to be used.

Compliance is checked by inspection.

8.1.1 Tools having a range of rated values such as for voltage and frequency and which can be operated without adjustment throughout the range shall be marked with the lower and upper limits of the range separated by a hyphen.

Example:

115-230 V: The tool is suitable for any value within the marked range.

Tools having different rated values and which have to be adjusted for use of a particular value by the user or installer shall be marked with the different values separated by an oblique stroke. This requirement is also applicable to tools with provision for connection to both single-phase and multi-phase supplies.

Documents
Document Sharing Hub
Full document details: IEC 62841-3-8 2024 EXV

Examples:

115/230 V: The tool is only suitable for the marked values.

230/400 V: The tool is only suitable for the voltages values indicated, 230 V being for single-phase operation and 400 V for three-phase operation.

Compliance is checked by inspection.

8.1.2 For tools marked with more than one **rated voltage**, a **rated voltage range** or with more than one **rated voltage range**, the **rated input** for each of these voltages shall be marked.

The upper and lower limits of the rated power input shall be marked on the tool so that the relation between input and voltage appears distinctly, unless the difference between the upper and lower limits of a **rated voltage range** does not exceed 20 % of the mean value of the range, in which case the marking for **rated input** may be related to the mean value of the range.

Compliance is checked by inspection.

8.2 Tools shall be marked with a safety warning in one of the following versions:

– "⚠WARNING – To reduce the risk of injury, user must read instruction manual", or
– symbol M002 of ISO 7010, or
– the appropriate symbol stated in the relevant part of IEC 62841-2, IEC 62841-3 or IEC 62841-4.

If used, the word "WARNING" shall be in capital letters not less than 2,4 mm high and shall not be separated from either the cautionary statement or the symbol ISO 7000-0434A or ISO 7000-0434B (2004-01).

If used, the statement shall be verbatim except the term "operator's manual" or "user guide" may be used for the term "instruction manual".

If additional symbols are used, they shall be in accordance with ISO 7010 or be designed in accordance with ISO 3864-2 or ISO 3864-3.

Cautionary statements having the same signal word such as "⚠WARNING" may be combined into one paragraph under one signal word. The order of statements shall be markings required by IEC 62841-1, markings required by the relevant part of IEC 62841-2, IEC 62841-3 or IEC 62841-4 and then any optional markings.

Compliance is checked by inspection and by measurement.

8.3 Tools shall be marked with additional information as follows:

– the business name and address of the manufacturer and, where applicable, his authorised representative. Any address shall be sufficient to ensure contact. Country or state, city and postal code (if any) are deemed sufficient for this purpose;
– designation of the tool,
designation of the tool may be achieved by a code that is any combination of letters, numbers or symbols, providing that this code is explained by giving the explicit designation such as "drill", "planer" etc. in the instructions supplied with the tool;

NOTE 1 An example of such code is "A123-B".

Documents
Document Sharing Hub
Full document details: IEC 62841-3-8 2024 EXV

– designation of series or type,
allowing the technical identification of the product. This may be achieved by a combination of letters and/or numbers and may be combined with the designation of tool;

NOTE 2 The term “designation of series or type” is also known as model number.

– the year of manufacture and a date code identifying at least the month of manufacture;
– for tools manufactured such that its parts are shipped separately for assembly by the end user, each part shall be marked with a distinct identification on the part or the package;
– “> 25 kg” if the mass of the tool is over 25 kg.

If additional markings are used, they shall not give rise to misunderstanding.

Tools shall also be marked with an indication of the direction of rotation of the **cutter block**.

The direction of rotation of the spindle shall be indicated on a fixed part of the tool in the vicinity of the spindle axis by an arrow raised or sunk which is visible when changing the **cutter block**, or by any other means not less visible and indelible.

In addition, for tools designed to operate at more than one spindle speed, tools shall also be marked as follows:

– for tools where the speed change is achieved by changing the position of the drive belts on the drive pulley, the selected speed shall be indicated on the same side of the tool as the start control by a diagram showing the relevant speed selected for each combination of pulleys; or
– for tools where the speed change is achieved by an electrical control circuit, the selected speed shall be indicated on the same side of tool as the switching device (e.g. a variable speed control dial provided with numbers).

Compliance is checked by inspection.

8.4 Markings specified in 8.1 to 8.3 shall not be on a **detachable part** of the tool.

Markings specified in 8.2 and 8.3 shall be clearly discernible from the outside of the tool. For markings other than symbols, this may be achieved by the use of a fold-over label on power cords of tools with **type Y attachment** or **type Z attachment**. Other markings on the tool may be visible after removal of a cover, if necessary.

Indications for switches and controls shall be placed on or in the vicinity of these components; they shall not be placed on parts which can be repositioned, or positioned in such a way that the marking is misleading.

Compliance is checked by inspection.

8.5 If the tool can be adjusted to suit different **rated voltages**, the voltage to which the tool is adjusted shall be clearly discernible.

This requirement does not apply to tools for star-delta connection.

For tools where frequent changes in voltage setting are not required, this requirement is considered to be met if the **rated voltage** to which the tool is adjusted can be determined from a wiring diagram fixed to the tool. The wiring diagram may be on the inside of a cover which has to be removed to connect the supply conductors. It shall not be on a label loosely attached to the tool.

Compliance is checked by inspection.

Documents
Document Sharing Hub
Full document details: IEC 62841-3-8 2024 EXV

8.6 For units the following shall be used:

V ..... volts
A ..... amperes
Ah ..... ampere-hours
Hz ..... hertz
W ..... watts
kW ..... kilowatts
F ..... farads
μF ..... microfarads
l ..... litres
g ..... grams
kg..... kilograms
bar ..... bars
Pa ..... pascals
h ..... hours
min..... minutes
s..... seconds
n_0..... no-load speed
.../min or ...min^{-1} ..... revolutions or reciprocations per minute (rpm)

For symbols the following shall be used:

⎓ or d.c. .....[symbol IEC 60417-5031 (2002-10)]
direct current

∼ or a.c. .....[symbol IEC 60417-5032 (2002-10)]
alternating current

3 ∼ .....three-phase alternating current

3N .....three-phase alternating current with neutral

A .....rated current of the appropriate fuse-link in amperes

x .....time-lag miniature fuse-link where X is the symbol for the time/current characteristic, as given in IEC 60127

.....[symbol IEC 60417-5019 (2006-08)]
protective earth

.....[symbol IEC 60417-5172 (2003-02)]
class II tool

IPXX .....IP symbol

.....[symbol ISO 7000-0434A or ISO 7000-0434B (2004-01)]
caution

.....[symbol M002 of ISO 7010]
read the instructions

Documents
Document Sharing Hub
Full document details: IEC 62841-3-8 2024 EXV

.....[symbol IEC 60417-5012 (2002-10)]
lamp

NOTE The rated wattage of the lamp may be indicated in association with this symbol.

.....[symbol IEC 60417-6041 (2010-08)]
visible radiation, instructional safeguard

Ø .....diameter

Li-Ion .....lithium-ion battery

NiCd .....nickel-cadmium battery

NiMH .....nickel-metal hydride battery

If additional symbols are used, they shall not give rise to misunderstanding and be explained in the instructions.

When other units are used, the units and their symbols shall be those of the international standardized system.

Compliance is checked by inspection.

8.7 Tools to be connected to more than two supply conductors shall be provided with a connection diagram, fixed to the tool, unless the terminals are clearly identified.

The earthing conductor is not considered to be a supply conductor. For tools for star-delta connection, the wiring diagram shall show how the windings are to be connected.

Compliance is checked by inspection.

8.8 Except for **type Z attachment**, terminals shall be indicated as follows:

– Terminals intended exclusively for the neutral conductor shall be indicated by the letter N.
– Earthing terminals shall be indicated by the symbol IEC 60417-5019 (2006-08).

These indications shall not be placed on screws, removable washers or other parts which might be removed when conductors are being connected.

Compliance is checked by inspection.

8.9 Switches which may give rise to a hazard when operated shall be marked or so placed as to indicate clearly which part of the tool they control.

Compliance is checked by inspection.

8.10 The “off” position of a multi-stable **power switch** shall be indicated; the indication shall be the figure ○, as given by symbol IEC 60417-5008 (2002-10). A **momentary power switch** which can be locked in the “on” position is not considered as a multi-stable switch.

Push-buttons used only for the "off" function shall be indicated by marking the button/position with the figure ○ and the colour of the button shall be red or black.

The figure ○ shall not be used for any other indication.

NOTE The figure ○ can, for example, also be used on a digital programming keyboard.

Documents
Document Sharing Hub

Full document details: IEC 62841-3-8 2024 EXV

For **transportable tools**, a power switch actuator or its cover shall not have a colour in a combination of yellow and red as specified for an emergency stop in accordance with ISO 13850.

When a flap/cover is provided and covers only the start button, the colour of the flap/cover shall not be black, red or yellow.

When a flap/cover is provided and covers the stop button, such flap/cover shall be red or black.

Compliance is checked by inspection.

8.11 **Control devices** intended to be adjusted during operation, shall be provided with an indication for the direction of adjustment to increase or to decrease the value of the characteristic being adjusted. An indication of + and – is considered to be sufficient for this requirement.

The requirement does not apply to **control devices** provided with an adjusting means, if its fully "on" position is opposite to its "off" position.

If figures are used for indicating the different positions, the "off" position shall be indicated by the figure O and the other positions shall be indicated by figures reflecting the greater output, input, speed, etc.

The indication for the different positions of the operating means of a **control device** shall be placed on the device itself, or adjacent to the operating means.

Compliance is checked by inspection.

8.12 Markings required by the standard shall be legible and durable. Signs shall be in contrast such as colour, texture, or relief, to their background such that the information or instructions provided by the signs are clearly legible when viewed with normal vision from a distance of (500 + 50) mm. Signs need not be in accordance with the blue colour requirements of ISO 3864-2.

Compliance is checked by inspection and by rubbing the marking by hand for 15 s with a piece of cloth soaked with water and again for 15 s with a piece of cloth soaked with petroleum spirit.

After the tests of 8.12, the marking shall be easily legible, it shall not be easily possible to remove markings.

In considering the durability of the marking, the effect of ***normal use*** *is taken into account. Thus, for example, marking by means of paint or enamel other than vitreous enamel on containers that are likely to be cleaned frequently is not considered to be durable.*

The petroleum spirit to be used for the test shall be a reagent grade hexane with a minimum of 85 % as n-hexane.

NOTE The designation "n-hexane" is the chemical nomenclature for a "normal" or straight chain hydrocarbon. An example of this petroleum spirit is also known as a certified ACS (American Chemical Society) reagent grade hexane (CAS #110-54-3).

If the marking has an adhesive backing, the adhesive backing shall be durable.

Compliance is checked by either meeting the requirements of UL 969 under the conditions of occasional exposure to oil, humidity and water, and appropriate for the surface to which it is applied, or by the following tests.

AVA Documents
Document Sharing Hub

Full document details: IEC 62841-3-8 2024 EXV

– *Three labels applied to the tools or a panel of the test surface material are placed in an oven for a minimum of 24 h with the oven is maintained at a temperature of (120 ± 2) °C, or alternatively for a minimum of 200 h at the temperature that the label is exposed to during the test of Clause 12.*
– *Six additional labels applied to the tool or a panel of the test surface material are placed in a controlled atmosphere maintained at 21 °C to 30 °C with a relative humidity of minimum 45 % for at least 24 h. After this conditioning, immerse three labels in water and the other three labels in IRM 903 oil at a temperature of 21 °C to 30 °C for 48 h.*
– *Three additional labels applied to the tool or a panel of the test surface material are placed in a controlled atmosphere maintained at 21 °C to 30 °C with a relative humidity of minimum 45 % for 72 h.*

After these conditionings, it shall not be easy to remove the label by scraping across the label with a flat steel blade of 0,8 mm thickness and any convenient width, held at right angles, and the label shall show no signs of curling.

8.13 If compliance with this standard depends upon the operation of a replaceable **thermal link** or fuse-link, the reference number or other means for identifying the link shall be marked on the link, or in a place that it is clearly visible after the link has failed, when the tool has been dismantled to the extent necessary for replacing the link.

This requirement does not apply to links which can only be replaced together with a part of the tool.

Compliance is checked by inspection.

8.14 An instruction manual and safety instructions shall be provided with the tool and packaged in such a way that is noticed by the user when the tool is removed from the packaging. An explanation of the symbols required by this standard and used on the tool shall be provided in either the instruction manual or the safety instructions.

They shall be written in the official language(s) of the country in which the tool is sold.

NOTE In Europe (EN 62841-1), the following additional requirement applies:

The words "Original instructions" shall appear on the language version(s) verified by the manufacturer or his authorised representative. Where no "Original instructions" exist in the official language(s) of the country where the tool is to be used, a translation into that/those language(s) shall be provided by the manufacturer or his authorised representative or by the person bringing the tool into the language area in question. The translations shall bear the words "Translation of the original instructions", and they shall be accompanied by a copy of the "Original instructions".

They shall be legible and contrast with the background.

They shall include the business name and address of the manufacturer and, where applicable, his authorised representative. Any address shall be sufficient to ensure contact. Country or state, city and postal code (if any) are deemed sufficient for this purpose.

They shall include the designation of the tool and series or type as required by 8.3, including description of machine such as “drill”, “planer” etc.

8.14.1 The subjects of safety instructions are the “General Power Tool Safety Warnings” of Part 1 as given in 8.14.1.1, the specific tool safety warnings of the relevant part of IEC 62841-2, IEC 62841-3 or IEC 62841-4 and any additional safety warning statements deemed necessary by the manufacturer. The “General Power Tool Safety Warnings” and the specific tool safety warnings, if in English, shall be verbatim and in any other official language to be equivalent. The numbering of the safety instructions, as given below, is not mandatory and may be omitted or replaced by other sorting means such as bullets. The “General Power Tool Safety Warnings” may be separate from the instruction manual.

AVA Documents
Document Sharing Hub

Full document details: IEC 62841-3-8 2024 EXV

As the term "power tool” or “tool” is not appropriate for **lawn and garden machinery**, for these products an appropriate term such as “machine” may be used.

The term verbatim means word-for-word but permits the differences in spelling between English-speaking countries.

Format of all safety warnings must differentiate, by font, highlighting or similar means, the context of clauses as illustrated below.

All notes in the safety instructions are not to be printed, they are information for the designer of the manual.

8.14.1.1 General power tool safety warnings

WARNING Read all safety warnings, instructions, illustrations and specifications provided with this power tool. *Failure to follow all instructions listed below may result in electric shock, fire and/or serious injury*.

Save all warnings and instructions for future reference.

The term "power tool" in the warnings refers to your mains-operated (corded) power tool or battery-operated (cordless) power tool.

1) Work area safety

a) **Keep work area clean and well lit**. *Cluttered or dark areas invite accidents.*

b) **Do not operate power tools in explosive atmospheres, such as in the presence of flammable liquids, gases or dust.** *Power tools create sparks which may ignite the dust or fumes.*

c) **Keep children and bystanders away while operating a power tool.** *Distractions can cause you to lose control.*

2) Electrical safety

a) **Power tool plugs must match the outlet. Never modify the plug in any way. Do not use any adapter plugs with earthed (grounded) power tools.** *Unmodified plugs and matching outlets will reduce risk of electric shock.*

b) **Avoid body contact with earthed or grounded surfaces, such as pipes, radiators, ranges and refrigerators.** *There is an increased risk of electric shock if your body is earthed or grounded.*

c) **Do not expose power tools to rain or wet conditions.** *Water entering a power tool will increase the risk of electric shock.*

d) **Do not abuse the cord. Never use the cord for carrying, pulling or unplugging the power tool. Keep cord away from heat, oil, sharp edges or moving parts.** *Damaged or entangled cords increase the risk of electric shock.*

e) **When operating a power tool outdoors, use an extension cord suitable for outdoor use.** *Use of a cord suitable for outdoor use reduces the risk of electric shock.*

f) **If operating a power tool in a damp location is unavoidable, use a residual current device (RCD) protected supply.** *Use of an RCD reduces the risk of electric shock.*

NOTE The term “residual current device (RCD)” can be replaced by the term “ground fault circuit interrupter (GFCI)” or “earth leakage circuit breaker (ELCB)”.

3) Personal safety

a) **Stay alert, watch what you are doing and use common sense when operating a power tool. Do not use a power tool while you are tired or under the influence of drugs, alcohol or medication.** *A moment of inattention while operating power tools may result in serious personal injury.*

AVA Documents
Document Sharing Hub
Full document details: IEC 62841-3-8 2024 EXV

b) **Use personal protective equipment. Always wear eye protection.** *Protective equipment such as a dust mask, non-skid safety shoes, hard hat or hearing protection used for appropriate conditions will reduce personal injuries.*

c) **Prevent unintentional starting. Ensure the switch is in the off-position before connecting to power source and/or battery pack, picking up or carrying the tool.** *Carrying power tools with your finger on the switch or energising power tools that have the switch on invites accidents.*

d) **Remove any adjusting key or wrench before turning the power tool on.** *A wrench or a key left attached to a rotating part of the power tool may result in personal injury.*

e) **Do not overreach. Keep proper footing and balance at all times.** *This enables better control of the power tool in unexpected situations.*

f) **Dress properly. Do not wear loose clothing or jewellery. Keep your hair and clothing away from moving parts.** *Loose clothes, jewellery or long hair can be caught in moving parts.*

g) **If devices are provided for the connection of dust extraction and collection facilities, ensure these are connected and properly used.** *Use of dust collection can reduce dust-related hazards*.

h) **Do not let familiarity gained from frequent use of tools allow you to become complacent and ignore tool safety principles.** *A careless action can cause severe injury within a fraction of a second.*

4) Power tool use and care

a) **Do not force the power tool. Use the correct power tool for your application.** *The correct power tool will do the job better and safer at the rate for which it was designed.*

b) **Do not use the power tool if the switch does not turn it on and off.** *Any power tool that cannot be controlled with the switch is dangerous and must be repaired.*

c) **Disconnect the plug from the power source and/or remove the battery pack, if detachable, from the power tool before making any adjustments, changing accessories, or storing power tools.** *Such preventive safety measures reduce the risk of starting the power tool accidentally.*

d) **Store idle power tools out of the reach of children and do not allow persons unfamiliar with the power tool or these instructions to operate the power tool.** *Power tools are dangerous in the hands of untrained users.*

e) **Maintain power tools and accessories. Check for misalignment or binding of moving parts, breakage of parts and any other condition that may affect the power tool's operation. If damaged, have the power tool repaired before use.** *Many accidents are caused by poorly maintained power tools.*

f) **Keep cutting tools sharp and clean.** *Properly maintained cutting tools with sharp cutting edges are less likely to bind and are easier to control.*

g) **Use the power tool, accessories and tool bits etc. in accordance with these instructions, taking into account the working conditions and the work to be performed.** *Use of the power tool for operations different from those intended could result in a hazardous situation.*

h) **Keep handles and grasping surfaces dry, clean and free from oil and grease.** *Slippery handles and grasping surfaces do not allow for safe handling and control of the tool in unexpected situations.*

5) Service

a) **Have your power tool serviced by a qualified repair person using only identical replacement parts.** *This will ensure that the safety of the power tool is maintained.*

8.14.1.2 The order of the safety warnings shall be in accordance with either item A) or B) and in accordance with item C):

A) The IEC 62841-1 warnings are followed by the relevant part of IEC 62841-2, IEC 62841-3 or IEC 62841-4 warnings. The order of the warnings within IEC 62841-1 and the

AVA Documents
Document Sharing Hub
Full document details: IEC 62841-3-8 2024 EXV

IEC 62841-2, IEC 62841-3 or IEC 62841-4 warnings shall remain as given above and in the relevant part of IEC 62841-2, IEC 62841-3 or IEC 62841-4.

B) The IEC 62841-1 and the IEC 62841-2, IEC 62841-3 or IEC 62841-4 warnings may be divided into the sections defined by the numbered subtitles and the associated warnings below the numbered subtitle. The order of warnings within each section shall remain as given above and in the relevant part of IEC 62841-2, IEC 62841-3 or IEC 62841-4.

When warnings are presented in this manner, the title of the IEC 62841-1 "General Power Tool Safety Warnings" shall be omitted and the 1st sentence of the warnings in 8.14.1.1 and 8.14.1.3, if applicable, shall be modified as follows:

⚠ WARNING Read all safety warnings designated by the ⚠ symbol and all instructions.

The sections of the safety warnings shall be presented in the related topic of the instruction manual.

The instruction manual section titles for IEC 62841-1 warnings shall have a format:

⚠ General Power Tool Safety Warnings – [Section subtitle]

Example:

⚠ General Power Tool Safety Warnings – Personal Safety

The instruction manual section titles for IEC 62841-2, IEC 62841-3 or IEC 62841-4 warnings shall have a format:

⚠ [Tool category name] Safety Warnings – [Section subtitle]

Example:

⚠ Circular Saw Safety Warnings – Cutting Procedures

If particular IEC 62841-2, IEC 62841-3 or IEC 62841-4 warnings do not have a numbered subtitle, then all warnings required by the particular IEC 62841-2, IEC 62841-3 or IEC 62841-4 shall be presented in the given order and the formatting rule above shall be followed without the [**Section subtitle**].

C) Any additional warnings deemed necessary by the manufacturer, shall not be inserted within any of the IEC 62841-1 or IEC 62841-2, IEC 62841-3 or IEC 62841-4 warnings. They may be either appended to the section(s) of the IEC 62841-1 or IEC 62841-2, IEC 62841-3 or IEC 62841-4 in accordance with the topic of the safety warnings or located in any other part of the instruction manual.

8.14.1.3 If the safety instructions are separate from the instruction manual, then the following warnings shall be included in the instruction manual. These warnings, if in English, shall be verbatim and in any other official language to be equivalent.

⚠ WARNING Read all safety warnings, instructions, illustrations and specifications provided with this power tool. *Failure to follow all instructions listed below may result in electric shock, fire and/or serious injury*.

Save all warnings and instructions for future reference.

8.14.2 The instruction manual shall be provided with the following, if appropriate.

a) Instructions for putting into use

1) Setting-up or fixing power tools in a stable position as appropriate for power tools which can be mounted on a support or fixed to a bench or the floor;

2) Assembly;

3) Connection to power supply, cabling, fusing, socket type and earthing requirements;

4) For tools adjustable to different **rated voltages**: instructions, illustrations, or both for changing the voltage. The terminal identification shall be provided if the motor

AVA Documents Document Sharing Hub

connection has to be altered to operate at a voltage other than that for which it was connected when shipped from the factory;

5) Illustrated description of functions;

6) Limitations on ambient conditions;

7) Fitting and adjusting of **guards** required by 19.1;

8) Information about disassembly and reassembly if applicable for transportation and/or use.

101) Instruction to check the **cutter block** for faultless condition before use;

102) Instruction to use the correct table rings in relation to the size of **cutter block**;

103) Instruction to always wear suitable personal protective equipment. This includes:

– hearing protection to reduce the risk of induced hearing loss;

– respiratory protection to reduce the risk of inhalation of harmful dust;

– safety gloves when handling the **cutter block** and rough material due to sharp edges; and

– safety glasses to avoid eye injury caused by flying particles;

104) When cutting wood, a warning that wood dust can cause health risks;

105) Instruction how to correctly fit the dust collection system and for the correct assembly of a dust-collecting device;

106) Information of the factors that influence exposure of dust, e.g. the type of material being machined and the importance of local extraction (capture or source) and proper adjustment of hoods, baffles or chutes;

107) A warning not to use non-recommended cutting tools, which can lead to injuries due to the loss of control.

b) Operating instructions

1) Setting and testing;

2) Tool changing;

3) Clamping of the workpiece;

4) Limits on size of workpiece and type of material;

5) General instructions for use;

6) Identification of handle(s) and grasping surface(s) required by 19.4;

7) For tools with electronic speed or load regulators which do not immediately restart the tool after a stalling: a warning that the tool will restart automatically if stalled;

8) For **transportable tools** only: instruction on lifting and transportation.

101) Information on possible contact of the **cutter block** with hands and fingers of the operator. Instruction defining the correct **guard** and how to adjust **guard(s)** to prevent accessibility to portions of the cutter tool not being used;

102) Information on possible **kickback**, a sudden reaction to uncontrolled guiding of small workpieces. Instruction to use additional measures such as horizontal pressure devices when working narrow workpieces to ensure safe working;

103) Information on the hazardous situation due to uncontrolled lift up of the workpiece. Instruction to support adequately large workpieces to be held in place;

104) When performing curved work, instruction to guide the workpiece in the correct way to prevent cutting injuries. Instruction on what type of **guard** shall be used to ensure safe operation;

105) A warning that the incorrect use of cutter tools, workpiece and guiding devices can lead to dangerous situation. Instruction how the operator shall be trained in the handling of the workpiece, use, adjustment and operation of workpiece clamps and guiding devices and tool selection;

Documents
Document Sharing Hub

Full document details: IEC 62841-3-8 2024 EXV

106) A warning about possible contact with moving parts. Instruction to switch off the tool and pull the plug when changing or adjusting;

107) A warning about incorrect adjustment of fences. Instruction how the fences shall be adjusted in relation to the different work. Instruction when and how to use a false fence to minimize the gap between the cutting tool and the fence plate;

108) A warning about a possible mistake of the cutting tool position. Instruction to fit the cutting tool to the tool correctly and to feed the workpiece against the direction of spindle rotation;

109) A warning on the necessity to select the correct speed on the tool. Instruction on how to select the right speed on the tool corresponding to the cutting tool and material being used;

110) Instruction to keep hands away during **straight work**. Instruction to use, where possible, pressure pads in conjunction with the fence;

111) A warning that missing stops can cause **kickback**. Instruction to use a stop(s) fixed to the fence when doing **stopped straight work**;

112) A warning that failure to use a tenoning slide or **guard** provided by the manufacturer for tenoning can lead to cutting injuries due to loss of control.

c) Maintenance and servicing instructions

1) **User maintenance**, such as cleaning, sharpening, lubricating, servicing and/or replacing of parts;

2) Servicing by manufacturer or agent; list of addresses;

3) List of user-replaceable parts and instruction how to replace them;

4) Special tools which may be required;

5) For power tools with **type X attachment**: instruction that, if the **supply cord** of this power tool is damaged, it must be replaced by a specially prepared **supply cord** available through the service organization;

6) For power tools with **type Y attachment**: instruction that, if the replacement of the **supply cord** is necessary, this has to be done by the manufacturer or his agent in order to avoid a safety hazard;

7) For power tools with **type Z attachment**: information that the **supply cord** of this power tool cannot be replaced, and the power tool shall be scrapped.

101) Information on which faults on the tool, including **guards** or the **cutter block**, shall be rectified as soon as they are discovered;

102) A warning that unmaintained tools can cause uncontrolled situations. Instruction to use cutting tools which are sharpened, maintained and adjusted in accordance with the tool manufacturer's instructions.

d) For tools with a **liquid system**, the substance of the following, as appropriate:

1) Instructions for

– the connection to the liquid supply;

– the use of the liquid and the use of **attachments** to comply with 14.3 in order to

– avoid the tool being affected by the liquid;

– the inspection of hoses and other critical parts which could deteriorate;

– the maximum permitted pressure of the liquid supply;

2) For tools provided with an **RCD**

– warning never to use the tool without the **RCD** provided with the tool;

– instruction always to test the correct operation of the **RCD** before starting work, unless the **RCD** is of a self-checking type;

3) For tools for use in combination with an isolating transformer: warning never to use the tool without the transformer delivered with the tool or of the type as specified in these instructions;

AVA Documents
Document Sharing Hub

4) Instruction that replacement of the plug or the **supply cord** shall always be carried out by the manufacturer of the tool or his service organization;
5) Instruction to keep liquid clear of the parts of the tool and away from persons in the working area.

NOTE In Europe (EN 62841-1), the following additional requirements apply:

Emissions

1) The noise emission, measured in accordance with I.2, as follows:
   - A-weighted sound pressure level L_{pA} and its uncertainty K_{pA}, where L_{pA} exceeds 70 dB(A). Where L_{pA} does not exceed 70 dB(A), this fact shall be indicated;
   - A-weighted sound power level L_{WA} and its uncertainty K_{WA}, where the A-weighted sound pressure level L_{pA} exceeds 80 dB(A);
   - peak C-weighted instantaneous sound pressure value L_{pCpeak}, where this exceeds 63 Pa (130 dB in relation to 20 µPa).
2) Recommendation for the operator to wear hearing protection.
3) The vibration total value and its uncertainty measured in accordance with I.3.

   When the vibration total value does not exceed 2,5 m/s^2, this shall be stated.

   When the vibration total value exceeds 2,5 m/s^2, its value shall be given in the instructions.
4) The following information:
   - that the declared vibration total value has been measured in accordance with a standard test method and may be used for comparing one tool with another;
   - that the declared vibration total value may also be used in a preliminary assessment of exposure.
5) A warning:
   - that the vibration emission during actual use of the power tool can differ from the declared total value depending on the ways in which the tool is used; and
   - of the need to identify safety measures to protect the operator that are based on an estimation of exposure in the actual conditions of use (taking account of all parts of the operating cycle such as the times when the tool is switched off and when it is running idle in addition to the trigger time).

8.14.3 If information about the mass or weight of the tool is provided, it shall be the mass specified in 5.17.

Compliance is checked by inspection.

9 Protection against access to live parts

9.1 Tools shall be so constructed and enclosed that there is adequate protection against accidental contact with live parts. The requirement applies for all positions of the tool, even after removal of detachable parts and soft materials (elastomers), such as soft grip coverings.

Compliance is checked by inspection, and by the tests of 9.2 to 9.4, as applicable.

9.2 An **accessible part** is not considered to be live if:

– the part is supplied with **safety extra-low voltage**

or

– the part is separated from **live parts** by **protective impedance**.

In the case of **protective impedance**, the current between the part and the supply source shall not exceed 2 mA for d.c., and its peak value shall not exceed 0,7 mA for a.c., and moreover:

– for voltages having a peak value over 42,4 V up to and including 450 V, the capacitance shall not exceed 0,1 µF;

Documents
Document Sharing Hub
Full document details: IEC 62841-3-8 2024 EXV

– for voltages having a peak value over 450 V up to and including 15 kV, the discharge shall not exceed 45 μC.

*Compliance is checked by operating the tool at **rated voltage**. Voltages and currents are measured between the relevant parts and each pole of the supply source. Discharges are measured immediately after the interruption of the supply.*

The quantity of electricity in the discharge is measured using a resistor having a nominal non-inductive resistance of 2 000 Ω. The quantity of electricity is calculated from the sum of all areas recorded on the voltage/time graph without taking voltage polarity into account.

NOTE Details of a suitable circuit for measuring the current are given in Figure C.3.

9.3 *Lamps located behind a detachable cover are not removed, provided the tool can be isolated from the supply by means of a plug or an **all-pole disconnection**. However, during insertion or removal of lamps which are located behind a detachable cover, protection against contact with* **live parts** *of the lamp cap shall be ensured.*

This excludes the use of screw type fuses and screw-type miniature circuit breakers which are accessible without the aid of a tool.

Test probe B of IEC 61032:1997 is applied with a force not exceeding 5 N, the tool being in every possible position except that tools normally used on the floor and having a mass exceeding 40 kg are not tilted. Through openings, the test probe is applied to any depth that the probe will permit, and it is rotated or angled before, during, and after insertion to any position.

If the opening does not allow the entry of the probe, a rigid test probe with the dimensions of the test probe B of IEC 61032:1997, but without any articulation, is used, the force on the probe is increased to 20 N and the test with the articulated test probe B of IEC 61032:1997 repeated.

*It shall not be possible to touch with the test probe **live parts** or **live parts** protected only by lacquer, enamel, ordinary paper, cotton, oxide film, beads or sealing compound.*

NOTE Lacquer, enamel, ordinary paper, cotton, oxide film on metal parts, beads and sealing compound, except self-hardening resins, are not considered to give the required protection against contact with **live parts**.

9.4 *Test probe 13 of IEC 61032:1997 is applied with a force not exceeding 5 N through openings in **class II tools** and **class II constructions**, except for those giving access to lamp caps and **live parts** in socket-outlets.*

The test probe is also applied through openings in earthed metal enclosures having a non-conductive coating such as enamel or lacquer.

*It shall not be possible to touch **live parts** with the test probe.*

9.5 **Class II tools** and **class II constructions** shall be so constructed and enclosed that there is adequate protection against accidental contact with **basic insulation**, and metal parts separated from **live parts** by **basic insulation** only.

Parts which are not separated from **live parts** by **double insulation** or **reinforced insulation** shall not be accessible.

This requirement applies for all positions of the tool, even after removal of **detachable parts**.

Compliance is checked by inspection and by applying the test probe B of IEC 61032:1997, as described in 9.3.

AVA Documents
Document Sharing Hub

Full document details: IEC 62841-3-8 2024 EXV

10 Starting

10.1 Tools shall start under all normal voltage conditions which may occur in use.

*Compliance is checked by starting the tool 10 times at no-load in succession at a voltage equal to 0,85 times the lowest **rated voltage** or 0,85 times the lower limit of the **rated voltage range**, **control devices** other than speed controls, if any, being set as in **normal use**.*

*Tools shall in addition be started 10 times in succession at a voltage equal to 1,1 times **rated voltage**.*

The interval between consecutive starts is made sufficiently long enough to prevent undue heating.

In all cases, the tool shall operate and overload protection devices incorporated in the tool shall not activate. Centrifugal and other automatic starting switches, if any, shall operate reliably, and without contact chattering.

10.2 Tools shall not draw excessive input current during starting that could lead to nuisance operation of facility mains over-current protection devices.

*Compliance is checked by starting the tool once at **rated voltage** and no-load with any speed controls set for maximum speed and all other **control device**s set as in **normal use**.*

*The current drawn by the tool at (2,0 ± 0,2) s after starting shall not exceed the greater of 30 A or 4 times the **rated current** of the tool.*

11 Input and current

The **rated input** or **rated current** shall be at least 110 % of the measured no-load input or current.

*Compliance is checked by measuring the power input or current of the tool when stabilized while all circuits which can operate simultaneously are in operation. The test shall be conducted without **accessories** attached or external load.*

*For tools marked with one or more **rated voltages**, the test is made at each of the **rated voltage**s. For tools marked with one or more **rated voltage ranges**, the test is made at both the upper and lower limits of the ranges, unless the marking of the **rated input** is related to the mean value of the relevant voltage range, in which case the test is made at a voltage equal to the mean value of that range.*

12 Heating

12.1 Tools shall not attain excessive temperatures with **rated input** or **rated current**.

*Compliance is checked by determining the temperature rise of the various parts under the conditions specified in 12.2 to 12.5. Then the test of Clause C.3 at 1,06 times the **rated voltage** is made under heated conditions.*

12.2 *For tools with one or more **rated voltages**: The tool is operated at each **rated voltage**, under the load conditions specified in 12.2.1, the torque being applied is measured. While maintaining the previously measured torque, the voltage is then adjusted to 0,94 times the **rated voltage** and 1,06 times the **rated voltage**.*

Documents
Document Sharing Hub

Full document details: IEC 62841-3-8 2024 EXV

The temperatures are measured at the most unfavourable of the two voltage settings. The temperatures that are measured by means of thermocouples are taken while the tool is operating.

*For tools with a **rated voltage range:** The tool is operated*

– *at the lower limit of the **rated voltage range,** under the load conditions specified in 12.2.1, the torque being applied is measured. While maintaining the previously measured torque, the voltage is then adjusted to 0,94 times the lower limit of the **rated voltage range**;*

and

– *at the upper limit of the **rated voltage range**, under the load conditions specified in 12.2.1, the torque being applied is measured. While maintaining the previously measured torque, the voltage is then adjusted to 1,06 times the upper limit of the **rated voltage range**.*

The temperatures are measured at the most unfavourable of the two voltage settings. The temperatures that are measured by means of thermocouples are taken while the tool is operating.

12.2.1 *The load conditions for the heating test of 12.2 are as follows.*

– *For tools without an **inherent operating cycle,** the tool is operated with a torque load applied such that **rated input** or **rated current** is drawn until thermal equilibrium is reached.*
– *For tools with an **inherent operating cycle**, the tool is operated with a torque load applied such that **rated input** or **rated current** is drawn some time during each of the tool's operating cycles. The tool is cycled consecutively for 30 min.*

12.3 *This subclause provides specific test conditions for heating elements and cord storage devices.*

12.3.1 *Heating elements, if any, are operated under the conditions specified in Clause 11 of IEC 60335-1:2010, when the tool is operated at a voltage equal to 1,06 times the **rated voltage**.*

12.3.2 *For tools provided with an automatic cord reel, one third of the total length of the cord is unreeled. The temperature rise of the cord sheath is determined as near as possible to the hub of the reel and also between the two outermost layers of the cord on the reel.*

*For cord storage devices, other than automatic cord reels, which are intended to accommodate the **supply cord** partially while the tool is in operation, 50 cm of the cord is unwound. The temperature rise of the stored part of the cord is determined at the most unfavourable place.*

12.4 *Temperature rises, other than those of windings, are determined by means of fine-wire thermocouples so chosen and positioned that they have the minimum effect on the temperature of the part under test.*

*The temperature rise of electrical insulation, other than that of windings, is determined on the surface of insulation, at places where failure could cause a short circuit, contact between **live parts** and **accessible parts**, bridging of insulation, or reduction of **creepage distances** or **clearances** below the values specified in 28.1.*

Temperature rises of windings are determined by the resistance method, unless the windings are non-uniform, or the method involves severe complications to make the necessary connections for the resistance measurement. In that case, the measurement is made by thermocouples.

Documents
Document Sharing Hub
Full document details: IEC 62841-3-8 2024 EXV

In determining the temperature rises of handles, knobs, grips and the like, consideration is given to all parts which are gripped in ***normal use****, and, if of insulating material, to those parts in contact with hot metal.*

NOTE 1 If it is necessary to dismantle the tool to position thermocouples, a remeasurement of the **no-load input** is a method to check that the tool has been correctly reassembled.

NOTE 2 The point of separation of the cores of a multicore cord is an example of a place where thermocouples are positioned.

NOTE 3 Thermocouples having wires with a diameter not exceeding 0,3 mm are considered to be fine-wire thermocouples.

12.5 *During the test,* ***protective devices*** *shall not operate and sealing compound, if any, shall not flow out. The temperature rises shall not exceed the values shown in Tables 1a and 1b, except as allowed by 12.6.*

Documents
Document Sharing Hub

Full document details: IEC 62841-3-8 2024 EXV

Table 1 – Maximum normal temperature rises *(1 of 2)*

Parts	Temperature rise K	
Windings [a], if the insulation system is		
– class 105	75	(65)
– class 120	90	(80)
Windings [a], if the insulation system according to IEC 60085:2007 is		
– class 130	95	(85)
– class 155	115	
– class 180	140	
– class 200	160	
– class 220	180	
– class 250	210	
Pins of appliance inlets:		
– for hot conditions	95	
– for cold conditions	40	
Ambient of switches, **temperature limiters** [b]:		
– without *T*-marking	30	
– with *T*-marking	*T*-25	
Rubber or polyvinyl chloride insulation of internal and external wiring, including **supply cords**:		
– without temperature rating [c]	50	
– with temperature rating (*T*)	*T*-25	
Cord sheath used as **supplementary insulation**	35	
Rubber, other than synthetic, used for gaskets or other parts, the deterioration of which could affect safety:		
– when used as **supplementary insulation** or as **reinforced insulation**	40	
– in other cases	50	
Lampholders E14 and B15:		
– metal or ceramic type	130	
– insulated type, other than ceramic	90	
– with *T*-marking	*T*-25	
Material used as insulation other than that specified for wires and windings [d]		
– impregnated or varnished textile, paper or press board	70	
– laminates bonded with:		
• melamine-formaldehyde; phenol-formaldehyde or phenol-furfural resins	85	(175)
• urea-formaldehyde resin	65	(150)
– Printed circuit boards bonded with epoxy resin	120	
– moulding of:		
• phenol-formaldehyde with cellulose fillers	85	(175)
• phenol-formaldehyde with mineral fillers	100	(200)
• melamine-formaldehyde	75	(175)
• urea-formaldehyde	65	(150)
– polyester with glass-fibre reinforcement	110	
– silicone rubber	145	
– polytetrafluoroethylene	265	
– pure mica and tightly sintered ceramic material when such materials are used as **supplementary insulation** or **reinforced insulation**	400	
– thermoplastic material [e]	–	

AVA Documents
Document Sharing Hub
Full document details: IEC 62841-3-8 2024 EXV

Table 1 *(2 of 2)*

Parts	Temperature rise K
Wood, in general [f]	65
Outer surface of capacitors [g]:	
– with marking of maximum operating temperature (*T*)	*T*-25
– without marking of maximum operating temperature:	
• small ceramic capacitors for radio and television interference suppression	50
• capacitors complying with IEC 60384-14 or 14.2 of IEC 60065:2011	50
• other capacitors [g]	20
Parts in contact with oil having a flash-point of *t* °C	*t*-50

[a] To allow for the fact that the average temperature of windings of universal motors, relays, solenoids, etc., is usually above the temperature at the points on the windings where thermocouples are placed, the figures without parentheses apply when the resistance method is used, and those within parentheses apply when thermocouples are used. For windings of vibrator coils and a.c. motors, the figures without parentheses apply in both cases. For motors constructed so that the circulation of the air between the inside and the outside of the case is prevented, but not necessarily sufficiently enclosed to be called airtight, the temperature rise limits may be increased by 5 K.

[b] *T* signifies the maximum operating temperature.

The ambient temperature of switches, **thermostats** and **temperature limiters** is the temperature of the air at the hottest point at a distance of 5 mm from the surface of the switch and component concerned.

For the purpose of this test, switches and **thermostats** marked with individual ratings may be considered as having no marking for the maximum operating temperature, if requested by the tool manufacturer.

[c] This limit applies to cables, cords and wires complying with the relevant IEC standards; for others, it may be different. While no limit applies to connectors, it is recognized that these limits for wiring apply to internal wiring at the point where it is terminated in a connector.

[d] The values in parentheses apply, if the material is used for handles, knobs, grips and the like, and is in contact with hot metal.

[e] There is no specific limit for thermoplastic material, which has to withstand the tests of 13.1, for which purpose the temperature rise must be determined.

[f] The limit specified concerns the deterioration of wood, and it does not take into account deterioration of surface finishes.

[g] There is no limit for the temperature rise of capacitors which are short-circuited in 18.6.

If other materials than those mentioned in the table are used, they are not to be subjected to temperatures in excess of their thermal capabilities as determined by ageing tests.

The value of the temperature rise of a winding is calculated from the formula:

$$\Delta t = \frac{R_2 - R_1}{R_1}(\mathrm{k} + t_1) - (t_2 - t_1)$$

where

Δt is the temperature rise;

R_1 is the resistance at the beginning of the test;

R_2 is the resistance at the end of the test;

k is equal to 234,5 for copper windings, and 225 for aluminium windings;

t_1 is the ambient temperature at the beginning of the test;

t_2 is the ambient temperature at the end of the test.

At the beginning of the test, the windings are to be at ambient temperature. It is recommended that the resistance of windings at the end of the test be determined by taking resistance measurements as soon as possible after switching off, and then at short intervals so that a curve of resistance against time can be plotted for ascertaining the resistance at the instant of switching off.

Documents
Document Sharing Hub
Full document details: IEC 62841-3-8 2024 EXV

Table 2 – Maximum outside surface temperature rises

Parts	Temperature rise K
External enclosure, except handles held in **normal use**	60
Handles, knobs, grips, and the like which, in **normal use**, are continuously held:	
– of metal	30
– of porcelain or vitreous material	40
– of moulded material, rubber or wood	50
Handles, knobs, grips, and the like which, in **normal use**, are held for short periods only (e.g. switches):	
– of metal	35
– of porcelain or vitreous material	45
– of moulded material, rubber or wood	60

12.6 The following tests shall be conducted when the temperature rises of the armature and/or field windings exceed the values in Table 1 or when there is doubt with regards to the temperature classification of the insulation system.

Three samples of the armature and/or field are subjected to the following tests.

a) Windings are kept for 10 days (240 h) in a heating cabinet, the temperature of which is (80 ± 2) °C in excess of the temperature rise of the windings determined according to 12.4. Then the samples shall be gradually cooled to ambient temperature without introducing thermal shock.

b) After this treatment, no interturn short circuit shall occur.

c) The samples are then subjected to a humidity treatment as specified in 14.1.

d) Immediately after this treatment, they shall withstand the tests of Annex D.

NOTE The use of a growler is one method to detect interturn short circuits.

Faults which may occur in insulation, which did not show an excessive temperature rise during the test of 12.4, are ignored and are repaired, if necessary, in order to complete the tests of 12.6.

13 Resistance to heat and fire

13.1 The following parts shall be sufficiently resistant to distortion due to heat, if this could cause the tool to fail to comply with this standard:

– parts of thermoplastic material provided as an enclosure to comply with Clause 9;

– parts of thermoplastic material supporting current carrying parts;

– parts of thermoplastic material providing **supplementary insulation** or **reinforced insulation**.

For the purpose of 13.1, “supporting” means that the retention of the current carrying part by the insulating material is relied upon to fulfil 28.1. Contact alone does not constitute support.

This requirement does not apply to:

– insulation and sheath of flexible **supply cords** or internal wiring;

– cord guards;

– ceramic materials;

– insulating parts of motors: e.g. shaft insulation, end spiders, slot liners, wedges, commutators.

AVA Documents
Document Sharing Hub
Full document details: IEC 62841-3-8 2024 EXV