IEC 62884-2

Edition 1.0 2017-08

INTERNATIONAL STANDARD

NORME INTERNATIONALE

colour inside

Measurement techniques of piezoelectric, dielectric and electrostatic oscillators – Part 2: Phase jitter measurement method

Techniques de mesure des oscillateurs piézoélectriques, diélectriques et électrostatiques – Partie 2: Méthode de mesure de la gigue de phase

IEC 62884-2:2017-08(en-fr)

Documents
Document Sharing Hub

Full document details: IEC 62884-2-2017

THIS PUBLICATION IS COPYRIGHT PROTECTED
Copyright © 2017 IEC, Geneva, Switzerland

All rights reserved. Unless otherwise specified, no part of this publication may be reproduced or utilized in any form or by any means, electronic or mechanical, including photocopying and microfilm, without permission in writing from either IEC or IEC's member National Committee in the country of the requester. If you have any questions about IEC copyright or have an enquiry about obtaining additional rights to this publication, please contact the address below or your local IEC member National Committee for further information.

Droits de reproduction réservés. Sauf indication contraire, aucune partie de cette publication ne peut être reproduite ni utilisée sous quelque forme que ce soit et par aucun procédé, électronique ou mécanique, y compris la photocopie et les microfilms, sans l'accord écrit de l'IEC ou du Comité national de l'IEC du pays du demandeur. Si vous avez des questions sur le copyright de l'IEC ou si vous désirez obtenir des droits supplémentaires sur cette publication, utilisez les coordonnées ci-après ou contactez le Comité national de l'IEC de votre pays de résidence.

IEC Central Office
3, rue de Varembé
CH-1211 Geneva 20
Switzerland

Tel.: +41 22 919 02 11
info@iec.ch
www.iec.ch

About the IEC
The International Electrotechnical Commission (IEC) is the leading global organization that prepares and publishes International Standards for all electrical, electronic and related technologies.

About IEC publications
The technical content of IEC publications is kept under constant review by the IEC. Please make sure that you have the latest edition, a corrigendum or an amendment might have been published.

IEC publications search - webstore.iec.ch/advsearchform
The advanced search enables to find IEC publications by a variety of criteria (reference number, text, technical committee,…). It also gives information on projects, replaced and withdrawn publications.

IEC Just Published - webstore.iec.ch/justpublished
Stay up to date on all new IEC publications. Just Published details all new publications released. Available online and once a month by email.

IEC Customer Service Centre - webstore.iec.ch/csc
If you wish to give us your feedback on this publication or need further assistance, please contact the Customer Service Centre: sales@iec.ch.

Electropedia - www.electropedia.org
The world's leading online dictionary on electrotechnology, containing more than 22 000 terminological entries in English and French, with equivalent terms in 16 additional languages. Also known as the International Electrotechnical Vocabulary (IEV) online.

IEC Glossary - std.iec.ch/glossary
67 000 electrotechnical terminology entries in English and French extracted from the Terms and Definitions clause of IEC publications issued since 2002. Some entries have been collected from earlier publications of IEC TC 37, 77, 86 and CISPR.

A propos de l'IEC
La Commission Electrotechnique Internationale (IEC) est la première organisation mondiale qui élabore et publie des Normes internationales pour tout ce qui a trait à l'électricité, à l'électronique et aux technologies apparentées.

A propos des publications IEC
Le contenu technique des publications IEC est constamment revu. Veuillez vous assurer que vous possédez l'édition la plus récente, un corrigendum ou amendement peut avoir été publié.

Recherche de publications IEC - webstore.iec.ch/advsearchform
La recherche avancée permet de trouver des publications IEC en utilisant différents critères (numéro de référence, texte, comité d'études,…). Elle donne aussi des informations sur les projets et les publications remplacées ou retirées.

IEC Just Published - webstore.iec.ch/justpublished
Restez informé sur les nouvelles publications IEC. Just Published détaille les nouvelles publications parues. Disponible en ligne et une fois par mois par email.

Service Clients - webstore.iec.ch/csc
Si vous désirez nous donner des commentaires sur cette publication ou si vous avez des questions contactez-nous: sales@iec.ch.

Electropedia - www.electropedia.org
Le premier dictionnaire d'électrotechnologie en ligne au monde, avec plus de 22 000 articles terminologiques en anglais et en français, ainsi que les termes équivalents dans 16 langues additionnelles. Egalement appelé Vocabulaire Electrotechnique International (IEV) en ligne.

Glossaire IEC - std.iec.ch/glossary
67 000 entrées terminologiques électrotechniques, en anglais et en français, extraites des articles Termes et Définitions des publications IEC parues depuis 2002. Plus certaines entrées antérieures extraites des publications des CE 37, 77, 86 et CISPR de l'IEC.

Documents
Document Sharing Hub

Full document details: IEC 62884-2-2017

IEC 62884-2

Edition 1.0 2017-08

INTERNATIONAL STANDARD

NORME INTERNATIONALE

colour inside

Measurement techniques of piezoelectric, dielectric and electrostatic oscillators –
Part 2: Phase jitter measurement method

Techniques de mesure des oscillateurs piézoélectriques, diélectriques et électrostatiques –
Partie 2: Méthode de mesure de la gigue de phase

INTERNATIONAL
ELECTROTECHNICAL
COMMISSION

COMMISSION
ELECTROTECHNIQUE
INTERNATIONALE

ICS 31.140

ISBN 978-2-8322-7553-5

Warning! Make sure that you obtained this publication from an authorized distributor.
Attention! Veuillez vous assurer que vous avez obtenu cette publication via un distributeur agréé.

® Registered trademark of the International Electrotechnical Commission
Marque déposée de la Commission Electrotechnique Internationale

AVA Documents
Document Sharing Hub

Full document details: IEC 62884-2-2017

CONTENTS

FOREWORD 4
INTRODUCTION 6
1 Scope 7
2 Normative references 7
3 Terms and definitions 7
4 Test and measurement procedures 8
4.1 General 8
4.2 Test methods of phase jitter 8
4.2.1 General 8
4.2.2 Measurement in the time domain 8
4.2.3 Measurement in the data domain 9
4.2.4 Measurement in the frequency domain 9
4.3 Input and output impedances of the measurement system 13
4.4 Measurement equipment 13
4.4.1 General 13
4.4.2 Jitter floor 13
4.4.3 Output wave form 13
4.4.4 Output voltage 14
4.5 Test fixture 14
4.6 Cable, tools and instruments, and so on 14
5 Measurement and the measurement environment 14
5.1 Set-up before taking measurements 14
5.2 Points to be considered and noted at the time of measurement 14
5.3 Treatment after the measurement 14
6 Measurement 15
6.1 Reference temperature 15
6.2 Measurement of temperature characteristics 15
6.3 Measurement under vibration 15
6.4 Measurement at the time of impact 15
6.5 Measurement in accelerated ageing 15
7 Other points to be noted 15
8 Miscellaneous 15
Annex A (normative) Calculation method for the amount of phase jitter 16
A.1 General 16
A.2 Explanation 16
A.3 Relations between phase noise and phase jitter 16
A.4 Commentary on theoretical positioning of phase jitter 18
A.5 Description 18
A.5.1 General 18
A.5.2 RMS jitter 19
A.5.3 Peak-to-peak jitter 19
A.5.4 Random jitter 20
A.5.5 Deterministic jitter 20
A.5.6 Period (periodic) jitter 20
A.5.7 Data-dependent jitter 20
A.5.8 Total jitter 21

AVA Documents
Document Sharing Hub
Full document details: IEC 62884-2-2017

A.6 Points to be considered for measurement 21
A.6.1 Measurement equipment 21
A.6.2 Factors of measurement errors 22
Bibliography 24

Figure 1 – Phase jitter measurement with sampling oscilloscope 9
Figure 2 – Block diagram of a jitter and wander analyser according to ITU-T O.172 11
Figure 3 – Equivalent block diagram 13
Figure A.1 – Concept diagram of SSB phase noise 18
Figure A.2 – Voltage versus time 19
Figure A.3 – Explanatory diagram of the amount of jitter applied to RMS jitter 21
Figure A.4 – Explanatory diagrams of random jitter, deterministic jitter, and total jitter 22

Table 1 – Fourier frequency range for phase noise test 10
Table 2 – Standard bit rates for various applications 12

Documents
Document Sharing Hub

Full document details: IEC 62884-2-2017

INTERNATIONAL ELECTROTECHNICAL COMMISSION

MEASUREMENT TECHNIQUES OF PIEZOELECTRIC, DIELECTRIC AND ELECTROSTATIC OSCILLATORS –

Part 2: Phase jitter measurement method

FOREWORD

1) The International Electrotechnical Commission (IEC) is a worldwide organization for standardization comprising all national electrotechnical committees (IEC National Committees). The object of IEC is to promote international co-operation on all questions concerning standardization in the electrical and electronic fields. To this end and in addition to other activities, IEC publishes International Standards, Technical Specifications, Technical Reports, Publicly Available Specifications (PAS) and Guides (hereafter referred to as "IEC Publication(s)"). Their preparation is entrusted to technical committees; any IEC National Committee interested in the subject dealt with may participate in this preparatory work. International, governmental and non-governmental organizations liaising with the IEC also participate in this preparation. IEC collaborates closely with the International Organization for Standardization (ISO) in accordance with conditions determined by agreement between the two organizations.
2) The formal decisions or agreements of IEC on technical matters express, as nearly as possible, an international consensus of opinion on the relevant subjects since each technical committee has representation from all interested IEC National Committees.
3) IEC Publications have the form of recommendations for international use and are accepted by IEC National Committees in that sense. While all reasonable efforts are made to ensure that the technical content of IEC Publications is accurate, IEC cannot be held responsible for the way in which they are used or for any misinterpretation by any end user.
4) In order to promote international uniformity, IEC National Committees undertake to apply IEC Publications transparently to the maximum extent possible in their national and regional publications. Any divergence between any IEC Publication and the corresponding national or regional publication shall be clearly indicated in the latter.
5) IEC itself does not provide any attestation of conformity. Independent certification bodies provide conformity assessment services and, in some areas, access to IEC marks of conformity. IEC is not responsible for any services carried out by independent certification bodies.
6) All users should ensure that they have the latest edition of this publication.
7) No liability shall attach to IEC or its directors, employees, servants or agents including individual experts and members of its technical committees and IEC National Committees for any personal injury, property damage or other damage of any nature whatsoever, whether direct or indirect, or for costs (including legal fees) and expenses arising out of the publication, use of, or reliance upon, this IEC Publication or any other IEC Publications.
8) Attention is drawn to the Normative references cited in this publication. Use of the referenced publications is indispensable for the correct application of this publication.
9) Attention is drawn to the possibility that some of the elements of this IEC Publication may be the subject of patent rights. IEC shall not be held responsible for identifying any or all such patent rights.

International Standard IEC 62884-2 has been prepared by IEC technical committee 49: Piezoelectric, dielectric and electrostatic devices and associated materials for frequency control, selection and detection.

This bilingual version (2019-11) corresponds to the monolingual English version, published in 2017-08.

The text of this International Standard is based on the following documents:

CDV	Report on voting
49/1212/CDV	49/1243/RVC

Full information on the voting for the approval of this International Standard can be found in the report on voting indicated in the above table.

Documents
Document Sharing Hub

Full document details: IEC 62884-2-2017

The French version of this standard has not been voted upon.

This document has been drafted in accordance with the ISO/IEC Directives, Part 2.

A list of all parts in the IEC 62884 series, published under the general title *Measurement techniques of piezoelectric, dielectric and electrostatic oscillators*, can be found on the IEC website.

The committee has decided that the contents of this document will remain unchanged until the stability date indicated on the IEC website under "http://webstore.iec.ch" in the data related to the specific document. At this date, the document will be

- reconfirmed,
- withdrawn,
- replaced by a revised edition, or
- amended.

IMPORTANT – The 'colour inside' logo on the cover page of this publication indicates that it contains colours which are considered to be useful for the correct understanding of its contents. Users should therefore print this document using a colour printer.

Documents
Document Sharing Hub

Full document details: IEC 62884-2-2017

INTRODUCTION

A crystal oscillator as a highly efficient and highly precise source of a frequency oscillation is widely used for fields such as the electronic equipment, communication equipment, measurement equipment and a clock. Also recently, digitalization of these equipments is advancing rapidly. In this situation, the frequency of crystal oscillator requires high precision and high stability and reduction of noise with oscillating phenomenon. A phase jitter is one of the noise characteristic in oscillation characteristic and precise measurement which is needed when shipping a component to a customer.

For advance application in electronic information and communication technology, (e.g. advanced satellite communications, control circuits for electric vehicle (EV)), necessity arises for the measurement method for common guidelines of phase jitter. In these days, measurement method of phase jitter also becomes more important from the electromagnetic influence (EMI) point of view.

This document has been restructured from IEC 60679-1:2007 (third edition) and IEC 60679-6:2011 (first edition). The test methods for oscillators have been separated from IEC 60679-6:2011 into IEC 62884 (all parts). This document covers the phase jitter measurement.

Documents
Document Sharing Hub
Full document details: IEC 62884-2-2017

MEASUREMENT TECHNIQUES OF PIEZOELECTRIC, DIELECTRIC AND ELECTROSTATIC OSCILLATORS –

Part 2: Phase jitter measurement method

1 Scope

This part of IEC 62884 specifies the methods for the measurement and evaluation of the phase jitter measurement of piezoelectric, dielectric and electrostatic oscillators, including dielectric resonator oscillators (DROs) and oscillators using a thin-film bulk acoustic resonator (FBAR) (hereinafter referred to as an "Oscillator") and gives guidance for phase jitter that allows the accurate measurement of RMS jitter.

In the measurement method, phase noise measurement equipment or a phase noise measurement system is used.

NOTE Dielectric resonator oscillators (DROs) and oscillators using FBAR are under consideration.

2 Normative references

The following documents are referred to in the text in such a way that some or all of their content constitutes requirements of this document. For dated references, only the edition cited applies. For undated references, the latest edition of the referenced document (including any amendments) applies.

IEC 60027 (all parts), *Letter symbols to be used in electrical technology*

IEC 60050-561, *International Electrotechnical Vocabulary – Part 561: Piezoelectric, dielectric and electrostatic devices and associated materials for frequency control, selection and detection*

IEC 60679-1:2017, *Piezoelectric, dielectric and electrostatic oscillators of assessed quality – Part 1: Generic specification*

IEC 60469, *Transitions, pulses and related waveforms – Terms, definitions and algorithms*

IEC 60617, *Graphical symbols for diagrams (available at http://std.iec.ch/iec60617)*

IEC 62884-1:2017, *Measurement techniques of piezoelectric, dielectric and electrostatic oscillators – Part 1: Basic methods for the measurement*

ISO 80000-1, *Quantities and units – Part 1: General*

3 Terms and definitions

For the purposes of this document, the terms and definitions given in IEC 60027 (all parts), IEC 60050-561, IEC 60469, IEC 60617, IEC 60679-1 and ISO 80000-1 apply.

ISO and IEC maintain terminological databases for use in standardization at the following addresses:

- IEC Electropedia: available at http://www.electropedia.org/

Documents
Document Sharing Hub

Full document details: IEC 62884-2-2017

- ISO Online browsing platform: available at http://www.iso.org/obp

4 Test and measurement procedures

4.1 General

The test and measurement procedures are given in Clause 4 of IEC 62884-1:2017 and shall be applied as indicated in 4.2 to Clause 8.

4.2 Test methods of phase jitter

4.2.1 General

As the measurement method, the phase noise measurement equipment (system) or the specially designed phase jitter measurement equipment shall be used.

Three basic methods are described:

a) measurement in the time domain by use of a digital real-time or sampling oscilloscope;

b) measurement in the data domain (BER test set);

c) measurement in the frequency domain using

   1) a phase noise test set, or

   2) a jitter and wander test set.

Method c) 1) using a phase noise test set is the recommended measurement method because it allows sufficient accuracy for arbitrary oscillator output frequencies.

– In the measurement of phase jitter and wander of oscillator circuits, attention should be paid to relative measurement reproducibility.

– A user and a manufacturer should deepen understanding through discussion about relative measurement reproducibility.

– Measurement equipment (including software program) should be made clear between a manufacturer and a user through a contract.

– When phase jitter and wander is calculated from phase noise, the range of frequency deviation should be made clear between a user and a manufacturer through a contract.

4.2.2 Measurement in the time domain

Digital real-time or sampling oscilloscopes with wide bandwidth, fast sampling rates, and large data memories are commercially available (see Figure 1), in some cases with special jitter evaluation software.

Documents
Document Sharing Hub

Full document details: IEC 62884-2-2017

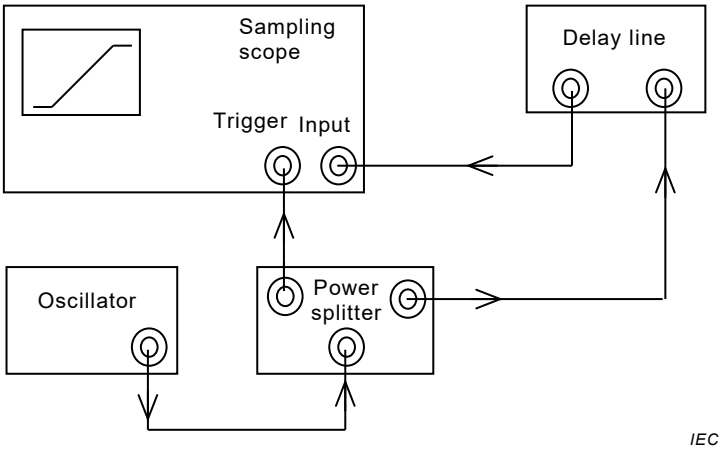

Figure 1 – Phase jitter measurement with sampling oscilloscope

The time variation of the edges of the clock signal relative to the trigger edge is displayed and stored over a large number (typically thousands) of cycles. Instrument software allows the determination of the peak-to-peak jitter value and a statistical evaluation of its distribution. The sampling oscilloscope method does not allow an accurate evaluation of the spectral content of the jitter. Also, jitter larger than one unit interval (UI) cannot be distinguished.

The measured jitter value is worse than the jitter of the device under test due to the internal jitter of the instrument's clock.

$$J_{\mathrm{DUT}} = \sqrt{(J_{\mathrm{meas}})^2 - (J_{\mathrm{int}})^2}$$

where

J_{DUT} is the measured jitter;

J_{meas} is the jitter of the device under test;

J_{int} is the internal jitter of the instrument's clock.

High stability/low noise Oscillator exhibits a significantly lower jitter than the instrument's clock jitter and trigger stability. Therefore, this technology is currently not suitable for accurate jitter measurement of such Oscillator.

4.2.3 Measurement in the data domain

Bit-error rate (BER) test sets are used for measuring bit-error rate to characterise the overall system performance of a communication subsystem. It is difficult to deduct the contribution of the Oscillator jitter to the system BER. This method also does not yield quantitative jitter performance values for the Oscillator.

4.2.4 Measurement in the frequency domain

4.2.4.1 Methods of phase noise test set

Phase jitter can be tested in the frequency domain using the well-established phase noise test method with a phase locked loop as described in 4.5.25 of IEC 62884-1:2017.

The range of detuned frequency shall be determined by contracts between customers and suppliers after discussion between them. The formula for calculating the RMS jitter from a phase noise is based on the calculation method for the amount of phase jitter shown in Annex A.

Documents
Document Sharing Hub
Full document details: IEC 62884-2-2017

For given SDH/SONET applications, the Fourier frequency range (f_{min} … f_{max}) may be selected as described in 3.2.53 of IEC 60679-1:2017. If not specified in the relevant data sheet, the recommended Fourier frequency range is as given by f_3 to f_4 in Table 1.

Table 1 – Fourier frequency range for phase noise test

Oscillator output frequency	$f_0 = f_{min}$	f_3	$f_4 = f_{max}$
1 MHz to < 10 MHz	10 Hz	10 kHz	100 kHz
10 MHz to < 50 MHz	20 Hz	20 kHz	500 kHz
50 MHz to < 200 MHz	100 Hz	50 kHz	1,5 MHz
200 MHz to < 1 000 MHz	1,0 kHz	200 kHz	5,0 MHz
1 000 MHz to < 5 000 MHz	5,0 kHz	500 kHz	15 MHz
≥ 5 000 MHz	20 kHz	2 MHz	80 MHz

From Table 1, it can be seen that the most stringent requirement applies over the range f_3 to f_4.

Jitter performance over a frequency-band other than f_3 to f_4 may also be defined.

To compute the phase jitter, the phase noise data $L(f)$ have to be integrated in the considered frequency ranges and evaluated as follows.

Compute the spectral density of phase fluctuations $S_\varphi(f)$ from the single-sideband phase noise plot 10 $\log_{10} L(f)$:

$$S_\varphi(f) = 2L(f)$$

Integrate $S_\varphi(f)$ over the specified Fourier frequency range f_{min} to f_{max} to get the mean squared phase jitter in that bandwidth:

$$\left\langle \Delta\varphi^2(f) \right\rangle = \int_{f_{min}}^{f_{max}} S_\varphi(f)\,df$$

The mean square phase jitter can be approximated by stepwise integration over the specified Fourier frequency range f_{min} to f_{max} segmented by n, for example:

$$\left\langle \Delta\varphi^2(f) \right\rangle \approx \sum S_\varphi(f_i)\Delta f_i$$

where

$$\Delta f_i = f_{i+1} - f_i \; (i = 1 \ldots n - 1)$$

with

$$f_1 = f_{min} \text{ and } f_n = f_{max}$$

Documents
Document Sharing Hub
Full document details: IEC 62884-2-2017

The square root $\Delta\varphi(f)$ of the integral is the effective or RMS phase jitter in radians. It can be converted into degrees, fractions of unit interval (UI), or time (in seconds) by multiplication with the following factor k:

	Degree °	Unit interval UI	Time s
k =	$360/2\pi$	$1/(2\pi)$	$1/(2\pi f_c)$

For random jitter, the peak-to-peak value is assumed to be 7 times the value computed above (see 3.2.53 of IEC 60679-1:2017).

Accuracy:

A 1 dB error of the phase noise data $10 \log_{10} L(f)$ over the full Fourier frequency range causes a jitter inaccuracy of approximately 10 %.

4.2.4.2 Methods of communication analyser

Commercially available communication analyser may be used to measure jitter and wander of clock sources with the method described in ITU-T Recommendation O.172 (see Figure 2). The working principle is similar to the phase noise measurement technique using the quadrature method. Softwares supplied with the test sets deliver directly all characteristic values for jitter and wander in numeric and graphical presentation.

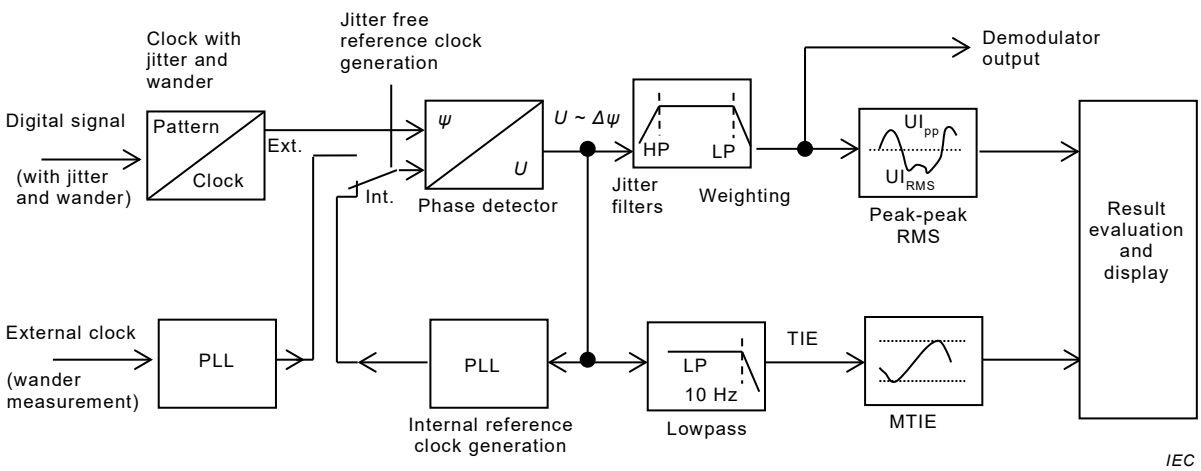

Figure 2 – Block diagram of a jitter and wander analyser according to ITU-T O.172

The advantage of these systems over the phase noise test is that a measurement of both RMS and peak-to-peak jitter is possible. The disadvantage is that these systems require an input signal (Oscillator frequency) according to the standard data bit rates for optical communication systems (SONET, SDH) – see Table 2.

Documents
Document Sharing Hub
Full document details: IEC 62884-2-2017

Table 2 – Standard bit rates for various applications

SDH	SONET	Bit rate Mbit/s	Allowed oscillator frequencies
-	OC-1	51,84	25,92 MHz, 51,84 MHz
STM-1	OC-3	155,52	77,76 MHz, 155,52 MHz
STM-4	OC-12	622,08	311,04 MHz, 622,08 MHz
STM-16	OC-48	2488,32	1 244,16 MHz, 2 488,32 MHz
STM-64	OC-192	9953,28	4 976,64 MHz, 9 953,28 MHz

An Oscillator with other output frequencies cannot be tested, which limits the area of application.

NOTE Other applications can have different requirements.

4.2.4.3 Methods of the specially designed measurement equipment

4.2.4.3.1 General

The measurement equipment and system shall be the specially designed SONET/SDH measurement equipment using a time interval analyser.

4.2.4.3.2 Measurement items

The measurement items shall be the RMS jitter and the period (periodic) jitter.

4.2.4.3.3 Number of measurements

The measurement times shall be determined by contracts between customers and suppliers after discussion between them. The target measurement times shall be 20 000 times or more.

Attention is needed because this device may not meet the requirements of the Oscillator for the following reasons.

a) The measurable range of the measurement equipment may not meet the frequency of the Oscillator to be measured.

b) The output voltage of the Oscillator is lower as compared with this device. For this reason, an amplifier is required, and the necessity of evaluating the phase jitter of the amplifier arises.

c) The realization of square waves, such as CMOS, LVDS, and LVPECL, is difficult because harmonics components decrease in the frequency bands exceeding 300 MHz. For this reason, the signal waveforms become sine waves, clipped-sine waves and the like. It is difficult to analyse them by the specially designed SONET/SDH measurement equipment, and thus a decrease in measurement accuracy is possible.

4.2.4.3.4 Block diagram of the measurement

A representative block diagram is shown in Figure 3. A practical block diagram is utilized as modified forms of Figure 1.

Documents
Document Sharing Hub
Full document details: IEC 62884-2-2017

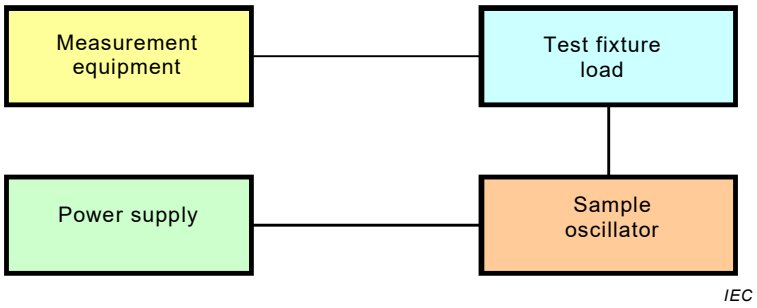

Figure 3 – Equivalent block diagram

4.3 Input and output impedances of the measurement system

The load impedance of the Oscillator widely ranges from 5 Ω to 100 MΩ. The parts to be applied are the types shown below. However, since numerous demands are made by customers, the values of this load impedance are infinite.

a) capacitor only;

b) resistor only;

c) both capacitor and resistor;

d) compliment output with bias.

Here, since the measurement system is unified into 50 Ω, the input-output impedances of measurement systems shall be 50 Ω. For this reason, the load impedance of the Oscillator shall also be 50 Ω.

The oscillation output voltage changes depend on the load impedance of the Oscillator. For this reason, the thermal noise of load circuits also changes.

As a result, since the amount of phase jitter changes, a recommendation is presented to suppliers and customers, when adopting any load impedance other than 50 Ω, to conduct a detailed study and examination and to determine the impedance by contract.

4.4 Measurement equipment

4.4.1 General

The specification required for the measurement equipment is described in 4.4.2 to 4.6 without any necessity of adhering to this document. The adoption of measurement equipment which satisfies sufficiently the requirements of the Oscillator is important.

4.4.2 Jitter floor

The jitter floor shall take values smaller by one digit as compared with the phase jitter demanded for the Oscillator.

4.4.3 Output wave form

The output waveforms shall be CMOS, LVDS, LVPECL, clipped-sine waves, sine waves, etc.

NOTE CMOS, LVDS, and LVPECL originally refer to the type of devices and not a waveform *per se*. However, they are also used as the terms showing the waveforms and are, therefore, described as the type of output waveforms in this document.

Documents
Document Sharing Hub
Full document details: IEC 62884-2-2017

4.4.4 Output voltage

The output voltage shall be 350 mV or more.

4.5 Test fixture

The specification demanded for measurement implements is shown below.

a) Connection between the Oscillator to be measured and measurement implements

The application of sockets, connectors, screws, clips, and the like may be allowed. In addition, the Oscillator to be measured and the measurement implements shall be ensured to be mechanically and electrically connectable.

b) Compatibilization of oscillators to be measured and measurement implements

The Oscillator to be measured and the measurement implements shall be capable of being earthed.

c) Although the load impedance may not be built in, a recommendation is presented to use measurement implements having the load impedance built therein in order to reduce influences on the phase jitter of the Oscillator to be measured from a thermal noise or the like from the load impedance.

4.6 Cable, tools and instruments, and so on

As for a cable, the double-shield type of a 50 Ω system shall be used. The cable shall be as short as possible. As connectors, the 50 Ω system shall be used. It is recommended that SMA or N-type connectors be used.

NOTE This measurement system is a 50 Ω system. This is the definition of the viewpoint of a measuring method. The actual load impedance of the Oscillator cannot say it as a 50 Ω system. When a measurement system is not a 50 Ω system, user and supplier permit mutually use of the measurement system which is not a 50 Ω system. User and supplier can define a new measurement system by a contract.

5 Measurement and the measurement environment

5.1 Set-up before taking measurements

Attention should be paid to the following matters.

a) The entire measurement system and the Oscillator to be measured shall be installed in a measurement chamber at least 2 h previously.

b) The measurement equipment shall be set to operate for 2 h or more.

c) The frequency stability of clock signals in the measurement equipment shall be verified to be smaller than, or equivalent to, the frequency stability of the Oscillator to be measured.

d) The power supply voltage of the Oscillator to be measured and the measurement equipment shall be verified to be set to the AC voltage and the DC voltage as requested.

e) Restrictions shall be provided for the operation of surrounding electronic devices so as not to produce an electronic noise from the surrounding.

5.2 Points to be considered and noted at the time of measurement

No vibration of the measurement system shall be caused. No movement shall be caused. No shifting of the cable position shall be made.

5.3 Treatment after the measurement

It is preferable not to disassemble the measurement system after performing measurements. Periodical inspection and calibration of the measurement equipment should be ensured.

Documents
Document Sharing Hub
Full document details: IEC 62884-2-2017