IEC 62909-2

Edition 1.0 2019-03

INTERNATIONAL STANDARD

NORME INTERNATIONALE

Bi-directional grid-connected power converters – Part 2: Interface of GCPC and distributed energy resources

Convertisseurs de puissance connectés aux réseaux bidirectionnels – Partie 2: Interface du GCPC avec les ressources énergétiques réparties

IEC 62909-2:2019-03(en-fr)

Documents
Document Sharing Hub

Full document details: IEC 62909-2 2019

THIS PUBLICATION IS COPYRIGHT PROTECTED
Copyright © 2019 IEC, Geneva, Switzerland

All rights reserved. Unless otherwise specified, no part of this publication may be reproduced or utilized in any form or by any means, electronic or mechanical, including photocopying and microfilm, without permission in writing from either IEC or IEC's member National Committee in the country of the requester. If you have any questions about IEC copyright or have an enquiry about obtaining additional rights to this publication, please contact the address below or your local IEC member National Committee for further information.

Droits de reproduction réservés. Sauf indication contraire, aucune partie de cette publication ne peut être reproduite ni utilisée sous quelque forme que ce soit et par aucun procédé, électronique ou mécanique, y compris la photocopie et les microfilms, sans l'accord écrit de l'IEC ou du Comité national de l'IEC du pays du demandeur. Si vous avez des questions sur le copyright de l'IEC ou si vous désirez obtenir des droits supplémentaires sur cette publication, utilisez les coordonnées ci-après ou contactez le Comité national de l'IEC de votre pays de résidence.

IEC Central Office
3, rue de Varembé
CH-1211 Geneva 20
Switzerland

Tel.: +41 22 919 02 11
info@iec.ch
www.iec.ch

About the IEC
The International Electrotechnical Commission (IEC) is the leading global organization that prepares and publishes International Standards for all electrical, electronic and related technologies.

About IEC publications
The technical content of IEC publications is kept under constant review by the IEC. Please make sure that you have the latest edition, a corrigendum or an amendment might have been published.

IEC publications search - webstore.iec.ch/advsearchform
The advanced search enables to find IEC publications by a variety of criteria (reference number, text, technical committee,…). It also gives information on projects, replaced and withdrawn publications.

IEC Just Published - webstore.iec.ch/justpublished
Stay up to date on all new IEC publications. Just Published details all new publications released. Available online and once a month by email.

IEC Customer Service Centre - webstore.iec.ch/csc
If you wish to give us your feedback on this publication or need further assistance, please contact the Customer Service Centre: sales@iec.ch.

Electropedia - www.electropedia.org
The world's leading online dictionary on electrotechnology, containing more than 22 000 terminological entries in English and French, with equivalent terms in 16 additional languages. Also known as the International Electrotechnical Vocabulary (IEV) online.

IEC Glossary - std.iec.ch/glossary
67 000 electrotechnical terminology entries in English and French extracted from the Terms and Definitions clause of IEC publications issued since 2002. Some entries have been collected from earlier publications of IEC TC 37, 77, 86 and CISPR.

A propos de l'IEC
La Commission Electrotechnique Internationale (IEC) est la première organisation mondiale qui élabore et publie des Normes internationales pour tout ce qui a trait à l'électricité, à l'électronique et aux technologies apparentées.

A propos des publications IEC
Le contenu technique des publications IEC est constamment revu. Veuillez vous assurer que vous possédez l'édition la plus récente, un corrigendum ou amendement peut avoir été publié.

Recherche de publications IEC - webstore.iec.ch/advsearchform
La recherche avancée permet de trouver des publications IEC en utilisant différents critères (numéro de référence, texte, comité d'études,…). Elle donne aussi des informations sur les projets et les publications remplacées ou retirées.

IEC Just Published - webstore.iec.ch/justpublished
Restez informé sur les nouvelles publications IEC. Just Published détaille les nouvelles publications parues. Disponible en ligne et une fois par mois par email.

Service Clients - webstore.iec.ch/csc
Si vous désirez nous donner des commentaires sur cette publication ou si vous avez des questions contactez-nous: sales@iec.ch.

Electropedia - www.electropedia.org
Le premier dictionnaire d'électrotechnologie en ligne au monde, avec plus de 22 000 articles terminologiques en anglais et en français, ainsi que les termes équivalents dans 16 langues additionnelles. Egalement appelé Vocabulaire Electrotechnique International (IEV) en ligne.

Glossaire IEC - std.iec.ch/glossary
67 000 entrées terminologiques électrotechniques, en anglais et en français, extraites des articles Termes et Définitions des publications IEC parues depuis 2002. Plus certaines entrées antérieures extraites des publications des CE 37, 77, 86 et CISPR de l'IEC.

AVA Documents
Document Sharing Hub

Full document details: IEC 62909-2 2019

IEC 62909-2

Edition 1.0 2019-03

INTERNATIONAL STANDARD

NORME INTERNATIONALE

Bi-directional grid-connected power converters – Part 2: Interface of GCPC and distributed energy resources

Convertisseurs de puissance connectés aux réseaux bidirectionnels – Partie 2: Interface du GCPC avec les ressources énergétiques réparties

INTERNATIONAL
ELECTROTECHNICAL
COMMISSION

COMMISSION
ELECTROTECHNIQUE
INTERNATIONALE

ICS 29.200

ISBN 978-2-8322-6613-7

Warning! Make sure that you obtained this publication from an authorized distributor.
Attention! Veuillez vous assurer que vous avez obtenu cette publication via un distributeur agréé.

® Registered trademark of the International Electrotechnical Commission
Marque déposée de la Commission Electrotechnique Internationale

Documents
Document Sharing Hub

Full document details: IEC 62909-2 2019

CONTENTS

FOREWORD 4
INTRODUCTION 6
1 Scope 7
2 Normative references 7
3 Terms and definitions 7
4 GCPC general specifications 11
4.1 General 11
4.2 Description of GCPC and its components 11
4.3 Operating modes 11
4.4 Interfaces with distributed energy resources 11
4.101 Specific requirements for earth fault detection on DC-port interfaces 12
5 Performance requirements 12
6 Hazard protection requirements 12
7 Test requirements 12
8 Information and marking requirements 12
101 Interface requirements for EV section 13
101.1 General system requirement and interface 13
101.2 Protection against electric shock 13
101.3 Connection between the power supply and the EV 13
101.4 EV coupler requirements 13
101.5 Charging cable assembly requirements 13
101.6 Specific requirements for GCPC including EV section 13
101.7 Communication 13
101.8 Isolation 14
101.8.1 General 14
101.8.2 GCPC of system A 14
101.8.3 GCPC of system B 14
101.8.4 GCPC of system C 14
101.9 Connection/disconnection 15
101.10 Self-start up 16
101.10.1 General 16
101.10.2 EV section of system A 16
101.11 Test requirements and procedures for connection 19
101.12 EV section requirements 19
102 Interface requirements for BS section 19
102.1 General 19
102.2 System configuration 19
102.3 Voltage and current requirements 20
102.3.1 General 20
102.3.2 Location for the information for selection 20
102.3.3 Voltage and current ranges 20
102.4 Requirements of the control port 21
102.5 Functional safety requirements of the control port 21
102.6 Installation 21
103 Interface requirements for PV section 21
103.1 Protection against arc fault 21

AVA Documents
Document Sharing Hub
Full document details: IEC 62909-2 2019

Bibliography 23

Figure 101 – GCPC with multiple earth fault detection circuits 12
Figure 102 – GCPC with EV section 13
Figure 103 – GCPC with an isolated DC/DC converter in its EV section 14
Figure 104 – GCPC with a non-isolated DC/DC converter in its EV section 15
Figure 105 – Active EV section of GCPC with a switch at DC-connection interface side 15
Figure 106 – Inactive EV section 16
Figure 107 – Interface circuit for charging/discharging control of system A station 18
Figure 108 – An example of GCPC containing a battery system with discrete DC/DC converter 19
Figure 109 – An example of GCPC containing a battery system with an integrated dc/dc converter 20
Figure 110 – External AFD 22
Figure 111 – Integrated AFD 22

Table 101 – Alphabetical list of terms 8
Table 102 – Parameters and values for interface circuit in Figure 107 17

Documents
Document Sharing Hub

Full document details: IEC 62909-2 2019

INTERNATIONAL ELECTROTECHNICAL COMMISSION

BI-DIRECTIONAL GRID-CONNECTED POWER CONVERTERS –

Part 2: Interface of GCPC and distributed energy resources

FOREWORD

1) The International Electrotechnical Commission (IEC) is a worldwide organization for standardization comprising all national electrotechnical committees (IEC National Committees). The object of IEC is to promote international co-operation on all questions concerning standardization in the electrical and electronic fields. To this end and in addition to other activities, IEC publishes International Standards, Technical Specifications, Technical Reports, Publicly Available Specifications (PAS) and Guides (hereafter referred to as "IEC Publication(s)"). Their preparation is entrusted to technical committees; any IEC National Committee interested in the subject dealt with may participate in this preparatory work. International, governmental and non-governmental organizations liaising with the IEC also participate in this preparation. IEC collaborates closely with the International Organization for Standardization (ISO) in accordance with conditions determined by agreement between the two organizations.
2) The formal decisions or agreements of IEC on technical matters express, as nearly as possible, an international consensus of opinion on the relevant subjects since each technical committee has representation from all interested IEC National Committees.
3) IEC Publications have the form of recommendations for international use and are accepted by IEC National Committees in that sense. While all reasonable efforts are made to ensure that the technical content of IEC Publications is accurate, IEC cannot be held responsible for the way in which they are used or for any misinterpretation by any end user.
4) In order to promote international uniformity, IEC National Committees undertake to apply IEC Publications transparently to the maximum extent possible in their national and regional publications. Any divergence between any IEC Publication and the corresponding national or regional publication shall be clearly indicated in the latter.
5) IEC itself does not provide any attestation of conformity. Independent certification bodies provide conformity assessment services and, in some areas, access to IEC marks of conformity. IEC is not responsible for any services carried out by independent certification bodies.
6) All users should ensure that they have the latest edition of this publication.
7) No liability shall attach to IEC or its directors, employees, servants or agents including individual experts and members of its technical committees and IEC National Committees for any personal injury, property damage or other damage of any nature whatsoever, whether direct or indirect, or for costs (including legal fees) and expenses arising out of the publication, use of, or reliance upon, this IEC Publication or any other IEC Publications.
8) Attention is drawn to the Normative references cited in this publication. Use of the referenced publications is indispensable for the correct application of this publication.
9) Attention is drawn to the possibility that some of the elements of this IEC Publication may be the subject of patent rights. IEC shall not be held responsible for identifying any or all such patent rights.

International Standard IEC 62909-2 has been prepared by subcommittee 22E: Stabilized power supplies, of IEC technical committee 22: Power electronic systems and equipment.

This International Standard is to be used in conjunction with IEC 62909-1:2017.

The clauses of particular requirements in this document supplement or modify the corresponding clauses in IEC 62909-1:2017. Where the text of subsequent clauses indicates an "addition" to or a "replacement" of the relevant requirement, test specification or explanation of IEC 62909-1:2017, these changes are made to the relevant text of IEC 62909-1:2017. Where no change is necessary and the clause is applicable, the words "The provisions of IEC 62909-1:2017, Clause XX shall apply" are used. Additional clauses, tables, figures and notes which are not included in IEC 62909-1:2017, are numbered starting from 101.

Documents
Document Sharing Hub

Full document details: IEC 62909-2 2019

The text of this International Standard is based on the following documents:

FDIS	Report on voting
22E/196/FDIS	22E/198/RVD

Full information on the voting for the approval of this International Standard can be found in the report on voting indicated in the above table.

This document has been drafted in accordance with the ISO/IEC Directives, Part 2.

A list of all parts in the IEC 62909 series, published under the general title *Bi-directional grid-connected power converters*, can be found on the IEC website.

The committee has decided that the contents of this document will remain unchanged until the stability date indicated on the IEC website under "http://webstore.iec.ch" in the data related to the specific document. At this date, the document will be

- reconfirmed,
- withdrawn,
- replaced by a revised edition, or
- amended.

Documents
Document Sharing Hub

Full document details: IEC 62909-2 2019

INTRODUCTION

In order to optimize power consumption, for example, within the nanogrid of a home, electricity generation should be optimally combined with rechargeable energy storage. This optimization is accomplished, in part, by providing an efficient transfer between DC and AC electricity to accommodate storage batteries. The IEC 62909 series describes a bi-directional grid-connected power converter (GCPC) which efficiently integrates sources of power generation with energy storage.

IEC 62909-1 defines common general requirements, independent from the special characteristics of individual applications. This document defines the additional requirements necessary for interfacing particular types of distributed energy resources to a GCPC.

Documents
Document Sharing Hub

Full document details: IEC 62909-2 2019

BI-DIRECTIONAL GRID-CONNECTED POWER CONVERTERS –

Part 2: Interface of GCPC and distributed energy resources

1 Scope

This part of IEC 62909 specifies GCPC interface requirements for particular distributed energy resources, namely electric vehicle (EV), battery, and photovoltaic (PV) systems. These requirements are in addition to the general requirements given in IEC 62909-1.

2 Normative references

The following documents are referred to in the text in such a way that some or all of their content constitutes requirements of this document. For dated references, only the edition cited applies. For undated references, the latest edition of the referenced document (including any amendments) applies.

IEC 60730-1:2013, *Automatic electrical controls – Part 1: General requirements* IEC 60730-1:2013/AMD1:2015

IEC 61508 (all parts), *Functional safety of electrical/electronic/programmable electronic safety-related systems*

IEC 61851-23:2014, *Electric vehicle conductive charging system – Part 23: DC electric vehicle charging station*

IEC 62909-1:2017, *Bi-directional grid-connected power converters – Part 1: General requirements*

3 Terms and definitions

For the purposes of this document, the terms and definitions given in IEC 62909-1 and the following apply.

ISO and IEC maintain terminological databases for use in standardization at the following addresses:

- IEC Electropedia: available at http://www.electropedia.org/
- ISO Online browsing platform: available at http://www.iso.org/obp

Table 101 provides an alphabetical cross-reference listing of terms.

Documents
Document Sharing Hub

Full document details: IEC 62909-2 2019

Table 101 – Alphabetical list of terms

Term	Term number	Term	Term number	Term	Term number
arc fault detector AFD	3.101	distributed energy resources	3.113	photovoltaic PV	3.124
arc fault interrupter AFI	3.102	earth fault	3.114	PV DC-port interface	3.125
battery management system BMS	3.103	electric vehicle EV	3.115	PV section	3.126
battery system BS	3.104	EV DC/DC converter	3.116	shutdown sequence	3.127
BS section	3.105	EV DC-port interface	3.117		
BS DC-port interface	3.106	EV section	3.118		
charge/discharge switch	3.107	fault status signal	3.119		
charging connector	3.108	GCPC	3.120		
DC-connection interface	3.109	GCPC fault detection circuit	3.121		
DC/DC converter	3.110	grid-independent operation	3.122		
DC-port interface	3.111	isolated DC/DC converter	3.123		
dedicated auxiliary power port	3.112				

Add the following terms and definitions:

3.101
arc fault detector
AFD
device or group of devices to detect arcs

Note 1 to entry: This note applies to the French language only.

3.102
arc fault interrupter
AFI
device able to interrupt arc faults triggered by an arc fault detector

Note 1 to entry: This note applies to the French language only.

3.103
battery management system
BMS
electronic system associated with a battery which has functions to cut off or disconnect it in case of overcharge, overcurrent, overdischarge, and overheating

Note 1 to entry The BMS monitors and/or manages the battery's state, calculates secondary data, reports that data and/or controls the battery's environment to influence its safety, performance and/or service life.

Note 2 to entry Cut-off or disconnection due to overdischarge is not mandatory if there is an agreement between the cell manufacturer and the GCPC manufacturer.

Note 3 to entry The function of the BMS can be assigned to the battery pack or to equipment that uses the battery.

AVA Documents
Document Sharing Hub
Full document details: IEC 62909-2 2019

Note 4 to entry The BMS can be divided and it can be found partially in the battery pack and partially on the equipment that uses the battery.

Note 5 to entry The BMS is sometimes also referred to as a BMU (battery management unit).

Note 6 to entry: This note applies to the French language only.

[SOURCE: IEC 62619:2017, 3.12, modified – The definition, Note 1 and Note 2 have been rephrased.]

3.104
battery system
BS
system which comprises one or more cells, modules or battery packs

Note 1 to entry It has a battery management system to cut off or disconnect it in case of overcharge, overcurrent, overdischarge, and overheating. Where cells, modules and battery packs employ an acid electrolyte, the BMS may be absent from the battery system provided that the BMS functions are integral to the BS section

Note 2 to entry Cut-off or disconnection due to overdischarge is not mandatory if there is an agreement between the cell manufacturer and the GCPC manufacturer

Note 3 to entry The battery system may have cooling or heating units.

[SOURCE: IEC 62619:2017, 3.11, modified – Note 1 and Note 2 have been rephrased.]

3.105
BS section
part of a GCPC between the DC-connection interface and a BS DC-port interface

3.106
BS DC-port interface
DC-port interface connected to a battery system

3.107
charge/discharge switch
switch for preventing unintentional power flow which is located between the DC-connection interface and a DC/DC converter, or between a DC/DC converter and an EV DC-port interface

3.108
charging connector
means of enabling the manual connection of a flexible cable to an EV for the purpose of charging the traction batteries

3.109
DC-connection interface
internal system DC bus between the DC/DC converters and the bi-directional inverter

[SOURCE: IEC 62909-1:2017, 3.4, modified – "power electronic" has been replaced with "DC/DC".]

3.110
DC/DC converter
equipment that converts one DC voltage to another DC voltage

[SOURCE: IEC 62909-1:2017, 3.6]

3.111
DC-port interface
interface between the DC/DC converter and distributed energy resources or, in the case where the DC-connection interface is directly connected to distributed energy resources

AVA Documents
Document Sharing Hub
Full document details: IEC 62909-2 2019

without the DC/DC converter, between the DC-connection interface and the distributed energy resources

[SOURCE: IEC 62909-1:2017, 3.5]

3.112
dedicated auxiliary power port
special port to supply auxiliary power from the EV to the GCPC to wake up the GCPC from operating in an idle state

3.113
distributed energy resources
DC power sources generating and/or storing electricity near the consuming area

[SOURCE: IEC 62909-1:2017, 3.9, modified – The note has been deleted.]

3.114
earth fault
occurrence of an accidental conductive path between a live conductor and the Earth

[SOURCE: IEC 60050-826:2004, 826-14-13, modified – The notes have been deleted.]

3.115
electric vehicle
electric road vehicle
EV
any vehicle propelled by an electric motor drawing current from a rechargeable energy storage system (RESS), intended primarily for use on public roads

[SOURCE: IEC 60364-7-722:2018, 722.3.1]

3.116
EV DC/DC converter
component of the EV section that converts one DC voltage to another DC voltage

3.117
EV DC-port interface
DC-port interface connected to an EV

3.118
EV section
part of a GCPC between the DC-connection interface and an EV DC-port interface

3.119
fault status signal
signal indicating that faults are present which could cause a hazard according to IEC 62909-2

3.120
bi-directional grid-connected power converter
grid-connected power converter
GCPC
power converter connected to the grid by the bi-directional inverter with multiple DC-port interfaces

Note 1 to entry: This note applies to the French language only.

[SOURCE: IEC 62909-1:2017, 3.19]

Documents
Document Sharing Hub

Full document details: IEC 62909-2 2019

3.121
GCPC fault detection circuit
circuit that detects functional faults in a GCPC

3.122
grid-independent operation
electricity supply through GCPC to an AC load during grid isolation

[SOURCE: IEC 62909-1:2017, 3.20]

3.123
isolated DC/DC converter
DC/DC converter with DC circuit on output side which is electrically separated by at least basic insulation from input side

3.124
photovoltaic
PV
relating to the conversion of light directly into electrical energy

[SOURCE: IEC 62109-1:2010, 3.55]

3.125
PV DC-port interface
DC-port interface connected to a PV system

3.126
PV section
part of a GCPC between the DC-connection interface and a PV DC-port interface

3.127
shutdown sequence
sequence for electrically disconnecting an EV from its DC-connection interface

4 GCPC general specifications

4.1 General

The provisions of IEC 62909-1:2017, 4.1 shall apply.

4.2 Description of GCPC and its components

The provisions of IEC 62909-1:2017, 4.2 shall apply.

4.3 Operating modes

The provisions of IEC 62909-1:2017, 4.3 shall apply.

4.4 Interfaces with distributed energy resources

Addition:

EV, battery system and PV distributed energy resource interfaces shall comply with the requirements in Clauses 101, 102, and 103, respectively.

NOTE 101 In the case where GCPC requirements conflict with requirements for other distributed energy resources, manufacturers consider the more stringent requirements.

AVA Documents
Document Sharing Hub

Full document details: IEC 62909-2 2019

NOTE 102 As for grid interface of GCPC, a description of the compliance with applicable national requirements is provided in 5.3.1 of IEC 62909-1:2017.

Add the following new subclause:

4.101 Specific requirements for earth fault detection on DC-port interfaces

Some distributed energy resources require an earth fault detection circuit on the DC-port interface for safety.

When a GCPC has multiple earth fault detection circuits on its DC-port interfaces, each earth fault detection circuit shall have little or no influence on any other GCPC fault detection circuit. An example of a GCPC with multiple earth fault detection circuits is shown in Figure 101.

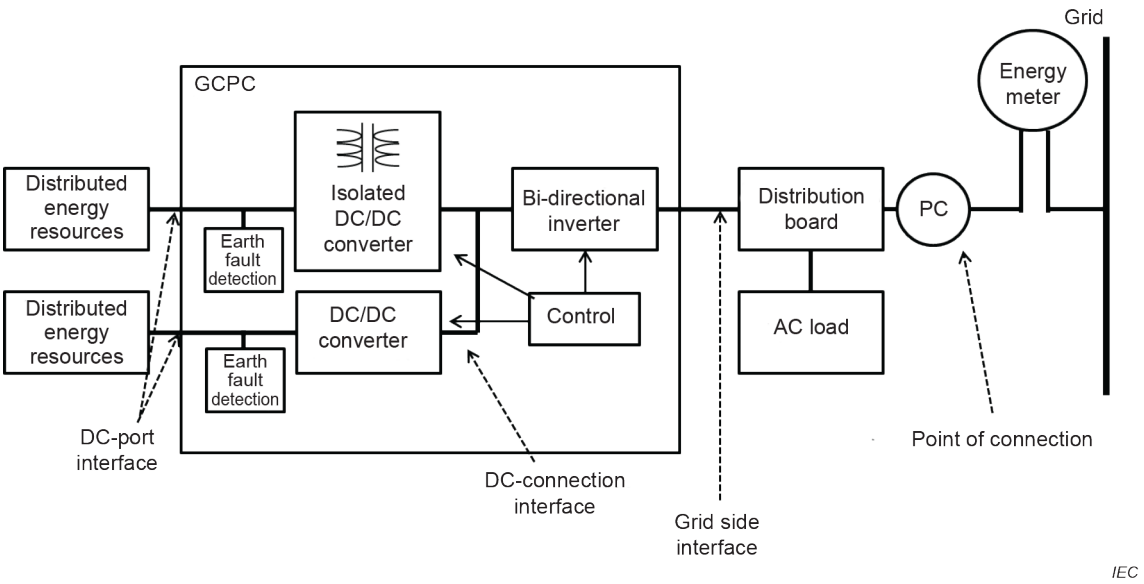

NOTE Point of the connection is the reference point where the user's electrical installation is connected to the grid. Power flows through this point to and from the grid, unless it is disconnected.

Figure 101 – GCPC with multiple earth fault detection circuits

5 Performance requirements

The provisions of IEC 62909-1:2017, Clause 5 shall apply.

6 Hazard protection requirements

The provisions of IEC 62909-1:2017, Clause 6 shall apply.

7 Test requirements

The provisions of IEC 62909-1:2017, Clause 7 shall apply.

8 Information and marking requirements

The provisions of IEC 62909-1:2017, Clause 8 shall apply.

Add the following new clauses:

Documents
Document Sharing Hub
Full document details: IEC 62909-2 2019

101 Interface requirements for EV section

101.1 General system requirement and interface

The provisions of IEC 61851-23:2014, Clause 6 shall apply.

For the purposes of Clause 101, each occurrence of “d.c. EV charging station" in the relevant clauses of IEC 61851-23:2014 referred to in this document shall be replaced with "GCPC including EV section". An example of a GCPC with an EV section is shown in Figure 102.

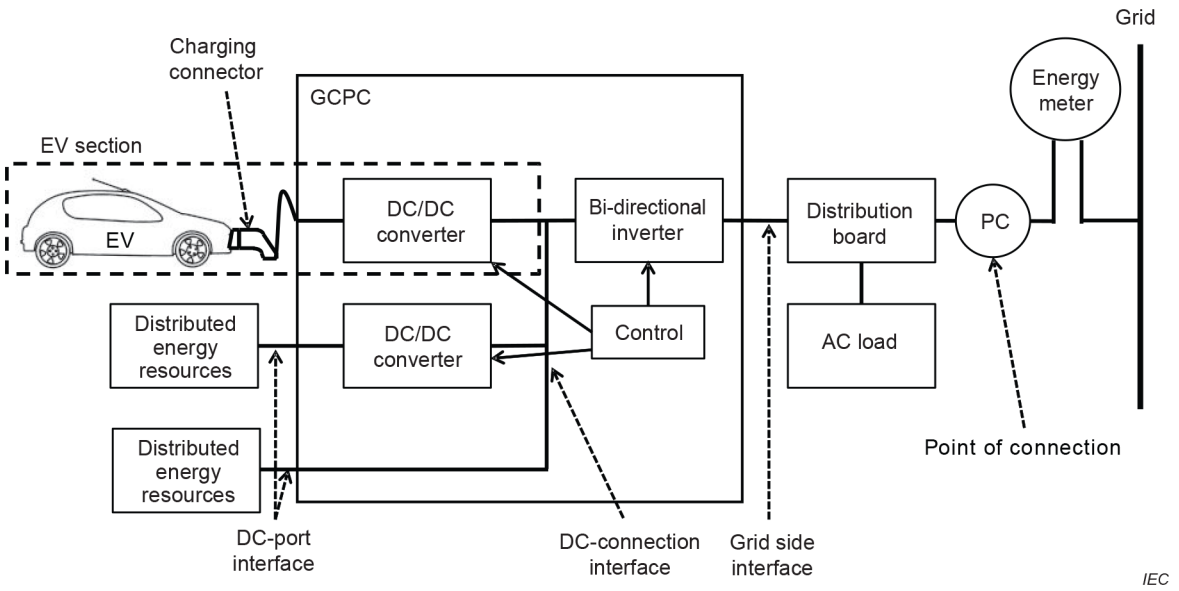

Figure 102 – GCPC with EV section

101.2 Protection against electric shock

The provisions of IEC 61851-23:2014, Clause 7 shall apply.

101.3 Connection between the power supply and the EV

The provisions of IEC 61851-23:2014, Clause 8 shall apply

101.4 EV coupler requirements

The provisions of IEC 61851-23:2014, Clause 9 shall apply.

101.5 Charging cable assembly requirements

The provisions of IEC 61851-23:2014, Clause 10 shall apply.

101.6 Specific requirements for GCPC including EV section

The provisions of IEC 61851-23:2014, Clause 101 shall apply.

101.7 Communication

The provisions of IEC 61851-23:2014, Clause 102 shall apply.

Documents
Document Sharing Hub
Full document details: IEC 62909-2 2019