IEC 62932-2-1

Edition 1.0 2020-02

INTERNATIONAL STANDARD

NORME INTERNATIONALE

Flow battery energy systems for stationary applications – Part 2-1: Performance general requirements and test methods

Systèmes de production d'énergie à batteries d'accumulateurs à circulation d'électrolyte pour les applications stationnaires – Partie 2-1: Exigences générales de performances et méthodes d'essai

IEC 62932-2-1:2020-02(en-fr)

Documents
Document Sharing Hub
Full document details: IEC 62932-2-1-2020

THIS PUBLICATION IS COPYRIGHT PROTECTED
Copyright © 2020 IEC, Geneva, Switzerland

All rights reserved. Unless otherwise specified, no part of this publication may be reproduced or utilized in any form or by any means, electronic or mechanical, including photocopying and microfilm, without permission in writing from either IEC or IEC's member National Committee in the country of the requester. If you have any questions about IEC copyright or have an enquiry about obtaining additional rights to this publication, please contact the address below or your local IEC member National Committee for further information.

Droits de reproduction réservés. Sauf indication contraire, aucune partie de cette publication ne peut être reproduite ni utilisée sous quelque forme que ce soit et par aucun procédé, électronique ou mécanique, y compris la photocopie et les microfilms, sans l'accord écrit de l'IEC ou du Comité national de l'IEC du pays du demandeur. Si vous avez des questions sur le copyright de l'IEC ou si vous désirez obtenir des droits supplémentaires sur cette publication, utilisez les coordonnées ci-après ou contactez le Comité national de l'IEC de votre pays de résidence.

IEC Central Office
3, rue de Varembé
CH-1211 Geneva 20
Switzerland

Tel.: +41 22 919 02 11
info@iec.ch
www.iec.ch

About the IEC
The International Electrotechnical Commission (IEC) is the leading global organization that prepares and publishes International Standards for all electrical, electronic and related technologies.

About IEC publications
The technical content of IEC publications is kept under constant review by the IEC. Please make sure that you have the latest edition, a corrigendum or an amendment might have been published.

IEC publications search - webstore.iec.ch/advsearchform
The advanced search enables to find IEC publications by a variety of criteria (reference number, text, technical committee,…). It also gives information on projects, replaced and withdrawn publications.

IEC Just Published - webstore.iec.ch/justpublished
Stay up to date on all new IEC publications. Just Published details all new publications released. Available online and once a month by email.

IEC Customer Service Centre - webstore.iec.ch/csc
If you wish to give us your feedback on this publication or need further assistance, please contact the Customer Service Centre: sales@iec.ch.

Electropedia - www.electropedia.org
The world's leading online dictionary on electrotechnology, containing more than 22 000 terminological entries in English and French, with equivalent terms in 16 additional languages. Also known as the International Electrotechnical Vocabulary (IEV) online.

IEC Glossary - std.iec.ch/glossary
67 000 electrotechnical terminology entries in English and French extracted from the Terms and Definitions clause of IEC publications issued since 2002. Some entries have been collected from earlier publications of IEC TC 37, 77, 86 and CISPR.

A propos de l'IEC
La Commission Electrotechnique Internationale (IEC) est la première organisation mondiale qui élabore et publie des Normes internationales pour tout ce qui a trait à l'électricité, à l'électronique et aux technologies apparentées.

A propos des publications IEC
Le contenu technique des publications IEC est constamment revu. Veuillez vous assurer que vous possédez l'édition la plus récente, un corrigendum ou amendement peut avoir été publié.

Recherche de publications IEC - webstore.iec.ch/advsearchform
La recherche avancée permet de trouver des publications IEC en utilisant différents critères (numéro de référence, texte, comité d'études,…). Elle donne aussi des informations sur les projets et les publications remplacées ou retirées.

IEC Just Published - webstore.iec.ch/justpublished
Restez informé sur les nouvelles publications IEC. Just Published détaille les nouvelles publications parues. Disponible en ligne et une fois par mois par email.

Service Clients - webstore.iec.ch/csc
Si vous désirez nous donner des commentaires sur cette publication ou si vous avez des questions contactez-nous: sales@iec.ch.

Electropedia - www.electropedia.org
Le premier dictionnaire d'électrotechnologie en ligne au monde, avec plus de 22 000 articles terminologiques en anglais et en français, ainsi que les termes équivalents dans 16 langues additionnelles. Egalement appelé Vocabulaire Electrotechnique International (IEV) en ligne.

Glossaire IEC - std.iec.ch/glossary
67 000 entrées terminologiques électrotechniques, en anglais et en français, extraites des articles Termes et Définitions des publications IEC parues depuis 2002. Plus certaines entrées antérieures extraites des publications des CE 37, 77, 86 et CISPR de l'IEC.

Documents
Document Sharing Hub

Full document details: IEC 62932-2-1-2020

IEC 62932-2-1

Edition 1.0 2020-02

INTERNATIONAL STANDARD

NORME INTERNATIONALE

Flow battery energy systems for stationary applications – Part 2-1: Performance general requirements and test methods

Systèmes de production d'énergie à batteries d'accumulateurs à circulation d'électrolyte pour les applications stationnaires – Partie 2-1: Exigences générales de performances et méthodes d'essai

INTERNATIONAL
ELECTROTECHNICAL
COMMISSION

COMMISSION
ELECTROTECHNIQUE
INTERNATIONALE

ICS 29.220.99

ISBN 978-2-8322-8537-4

Warning! Make sure that you obtained this publication from an authorized distributor.
Attention! Veuillez vous assurer que vous avez obtenu cette publication via un distributeur agréé.

® Registered trademark of the International Electrotechnical Commission
Marque déposée de la Commission Electrotechnique Internationale

Documents
Document Sharing Hub

Full document details: IEC 62932-2-1-2020

CONTENTS

FOREWORD 3
INTRODUCTION 5
1 Scope 6
2 Normative references 6
3 Terms, definitions and abbreviated terms 6
3.1 Terms and definitions 6
3.2 Abbreviated terms 6
4 General requirements 7
5 General test conditions 7
5.1 Accuracy of measuring instruments 7
5.1.1 Voltage measurement 7
5.1.2 Current measurement 7
5.1.3 Electric energy measurement 7
5.1.4 Temperature measurement 7
5.1.5 Time measurement 7
5.2 Ambient temperature 7
5.3 Point of connection (POC) and point of measurement (POM) 8
5.4 Test object 9
5.5 Test object unit (TOU) selection 9
6 Test methods 9
6.1 Determination of energy at a constant power 9
6.1.1 General 9
6.1.2 Test procedures 9
6.2 Determination of maximum deliverable output power 10
6.2.1 General 10
6.2.2 Test procedures 10
6.3 Determination of maximum receivable input power 11
6.3.1 General 11
6.3.2 Test procedures 11
6.4 Determination of energy efficiency at a constant power level 12
6.4.1 General 12
6.4.2 Test procedures 12
6.5 Determination of cycle life 13
Annex A (informative) Testing of discharge power vs energy or energy efficiency 14

Figure 1 – Flow battery energy system 5
Figure 2 – POM/POC interconnection cases a), b), c) 8

Documents
Document Sharing Hub

Full document details: IEC 62932-2-1-2020

INTERNATIONAL ELECTROTECHNICAL COMMISSION

FLOW BATTERY ENERGY SYSTEMS FOR STATIONARY APPLICATIONS –

Part 2-1: Performance general requirements and test methods

FOREWORD

1) The International Electrotechnical Commission (IEC) is a worldwide organization for standardization comprising all national electrotechnical committees (IEC National Committees). The object of IEC is to promote international co-operation on all questions concerning standardization in the electrical and electronic fields. To this end and in addition to other activities, IEC publishes International Standards, Technical Specifications, Technical Reports, Publicly Available Specifications (PAS) and Guides (hereafter referred to as "IEC Publication(s)"). Their preparation is entrusted to technical committees; any IEC National Committee interested in the subject dealt with may participate in this preparatory work. International, governmental and non-governmental organizations liaising with the IEC also participate in this preparation. IEC collaborates closely with the International Organization for Standardization (ISO) in accordance with conditions determined by agreement between the two organizations.
2) The formal decisions or agreements of IEC on technical matters express, as nearly as possible, an international consensus of opinion on the relevant subjects since each technical committee has representation from all interested IEC National Committees.
3) IEC Publications have the form of recommendations for international use and are accepted by IEC National Committees in that sense. While all reasonable efforts are made to ensure that the technical content of IEC Publications is accurate, IEC cannot be held responsible for the way in which they are used or for any misinterpretation by any end user.
4) In order to promote international uniformity, IEC National Committees undertake to apply IEC Publications transparently to the maximum extent possible in their national and regional publications. Any divergence between any IEC Publication and the corresponding national or regional publication shall be clearly indicated in the latter.
5) IEC itself does not provide any attestation of conformity. Independent certification bodies provide conformity assessment services and, in some areas, access to IEC marks of conformity. IEC is not responsible for any services carried out by independent certification bodies.
6) All users should ensure that they have the latest edition of this publication.
7) No liability shall attach to IEC or its directors, employees, servants or agents including individual experts and members of its technical committees and IEC National Committees for any personal injury, property damage or other damage of any nature whatsoever, whether direct or indirect, or for costs (including legal fees) and expenses arising out of the publication, use of, or reliance upon, this IEC Publication or any other IEC Publications.
8) Attention is drawn to the Normative references cited in this publication. Use of the referenced publications is indispensable for the correct application of this publication.
9) Attention is drawn to the possibility that some of the elements of this IEC Publication may be the subject of patent rights. IEC shall not be held responsible for identifying any or all such patent rights.

International Standard IEC 62932-2-1 has been prepared by IEC technical committee 21: Secondary cells and batteries, in collaboration with IEC technical committee 105: Fuel cell technologies.

The text of this International Standard is based on the following documents:

FDIS	Report on voting
21/1028/FDIS	21/1036/RVD

Full information on the voting for the approval of this International Standard can be found in the report on voting indicated in the above table.

This document has been drafted in accordance with the ISO/IEC Directives, Part 2.

A list of all parts in the IEC 62932 series, published under the general title *Flow battery energy systems for stationary applications*, can be found on the IEC website.

Documents
Document Sharing Hub

Full document details: IEC 62932-2-1-2020

The committee has decided that the contents of this document will remain unchanged until the stability date indicated on the IEC website under "http://webstore.iec.ch" in the data related to the specific document. At this date, the document will be

- reconfirmed,
- withdrawn,
- replaced by a revised edition, or
- amended.

Documents
Document Sharing Hub

Full document details: IEC 62932-2-1-2020

INTRODUCTION

A flow battery system (FBS) can be utilized as a main part of a flow battery energy system (FBES). Such an FBES can consist of:

– a flow battery system,
– a power conversion system,
– other equipment and surroundings.

The FBES is connected to the external power input or output via a point of connection (POC).

This document includes the domain of the FBES, as shown in Figure 1. Auxiliary energy to the battery management system (BMS), battery support system (BSS), and power conversion system (PCS) may be supplied by one of the following:

– direct connection to the external power source;
– the internal power source of the FBES or FBS itself.

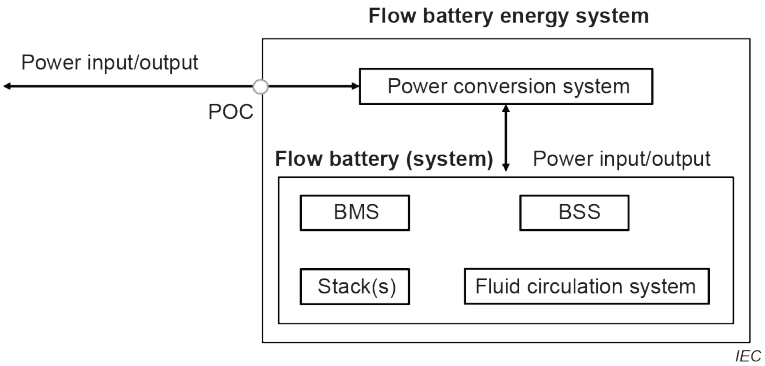

Figure 1 – Flow battery energy system

Documents
Document Sharing Hub
Full document details: IEC 62932-2-1-2020

FLOW BATTERY ENERGY SYSTEMS FOR STATIONARY APPLICATIONS –

Part 2-1: Performance general requirements and test methods

1 Scope

This part of IEC 62932 specifies methods of test and requirements for the flow battery system (FBS) and the flow battery energy system (FBES) for the verification of their performances.

This document is applicable to FBES or FBS which are designed and used for service in stationary locations (i.e. not generally to be moved from place to place).

This document does not cover testing of the system for electromagnetic compatibility (EMC).

2 Normative references

The following documents are referred to in the text in such a way that some or all of their content constitutes requirements of this document. For dated references, only the edition cited applies. For undated references, the latest edition of the referenced document (including any amendments) applies.

IEC 62932-1, *Flow battery energy systems for stationary applications – Part 1: Terminology and general aspects*

IEC 62932-2-2, *Flow battery energy systems for stationary applications – Part 2-2: Safety requirements*

IEC 61427-2, *Secondary cells and batteries for renewable energy storage – General requirements and methods of test – Part 2: On-grid applications*

3 Terms, definitions and abbreviated terms

3.1 Terms and definitions

For the purposes of this document the terms and definitions given in IEC 62932-1 apply.

ISO and IEC maintain terminological databases for use in standardization at the following addresses:

- IEC Electropedia: available at http://www.electropedia.org/.
- ISO Online browsing platform: available at http://www.iso.org/obp.

3.2 Abbreviated terms

BMS battery management system

BSS battery support system

FBES flow battery energy system

FBS flow battery system

PCS power conversion system

POC point of connection

POM point of measurement

TOU test object unit

Documents
Document Sharing Hub

Full document details: IEC 62932-2-1-2020

4 General requirements

The FBES or FBS shall be designed to withstand mechanical stresses, vibrations and shocks during transportation, handling and use.

The manufacturer shall provide documentation for transportation, installation, commissioning, operation, maintenance, and disposal of the FBES or FBS.

The FBES or FBS shall be characterized by appropriate performance parameters, including rated power, rated energy, rated energy efficiency, maximum output and input powers. More information, such as energy or energy efficiency at different power levels (see Annex A), will help the user know and use the FBES or FBS better.

Safety related requirements and methods of test shall be in accordance with IEC 62932-2-2.

5 General test conditions

5.1 Accuracy of measuring instruments

5.1.1 Voltage measurement

The instruments used shall be of an accuracy class equal to 1 % or better. The internal resistance of the voltmeter used shall be at least 1 kΩ/V.

5.1.2 Current measurement

The instruments used shall be of an accuracy class equal to 1 % or better.

Particular attention shall be given to the accuracy of DC and AC current measurement devices as any degraded accuracy or instability will negatively impact the precision of energy and efficiency determinations.

5.1.3 Electric energy measurement

The instruments used shall be of an accuracy class equal to 1 % or better.

Particular attention shall be given to the accuracy of DC and AC power and energy measurement devices as any degraded accuracy or instability will negatively impact the precision of energy and efficiency determinations.

5.1.4 Temperature measurement

The instruments used shall have a resolution of 0,5 K and the accuracy of the instruments shall be ±1 K or better.

5.1.5 Time measurement

The instruments used shall have a resolution of 1 s and the accuracy of the instruments shall be 1 % of the measured time interval or better.

5.2 Ambient temperature

All tests of an FBES or FBS shall be carried out at an ambient temperature of 25 °C ± 5 K unless otherwise specified in a test clause or agreed by the manufacturer and user. The ambient temperature shall be measured and reported. The measuring instrument or probe shall be shielded from draught and radiant heating.

Documents
Document Sharing Hub
Full document details: IEC 62932-2-1-2020

During a test, the FBES or FBS will operate spontaneously at a temperature different to the ambient one due to energy conversion inefficiencies, internal frictional or ohmic losses and similar.

For any test, the average ambient temperature and the temperature of the fluids entering the flow battery cell or stack shall be recorded and reported. The location of the fluid temperature probe shall be described.

5.3 Point of connection (POC) and point of measurement (POM)

The POC and POM shall be selected according to relevant examples and conditions a), b) or c) of Figure 2. The power and the energy value are to be measured at the corresponding POM of the FBS, FBES and the auxiliary equipment.

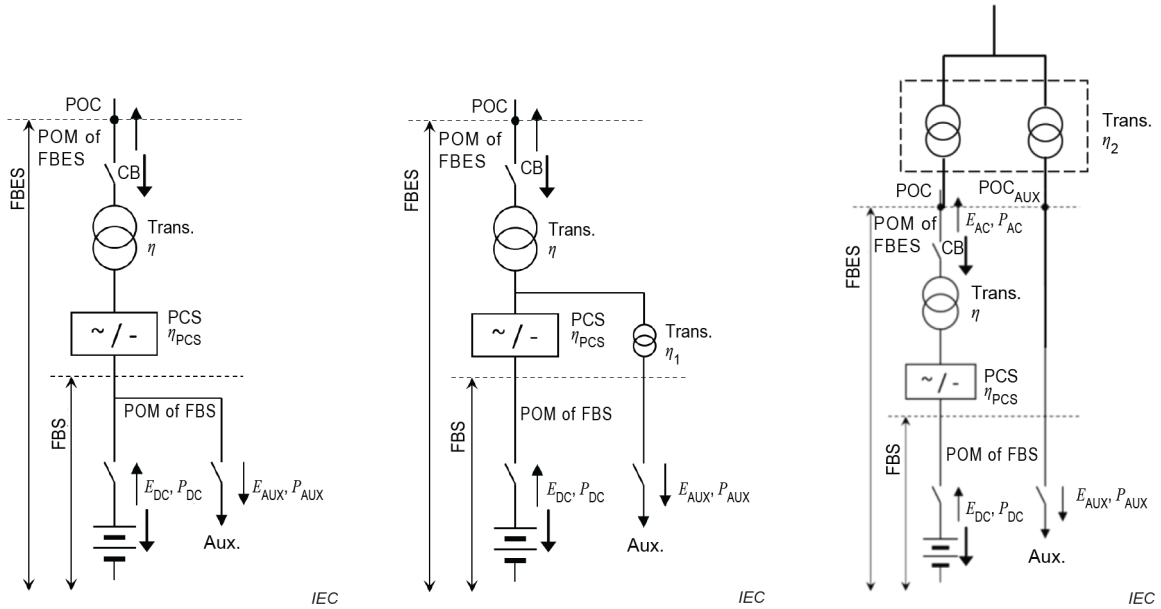

a) Case a), auxiliary energy/power as DC is supplied by the FBS

b) Case b), auxiliary energy/power as AC is supplied below the POC by the FBES or FBS

c) Case c), auxiliary energy/power as AC supplied via an auxiliary POC from the grid

Key

P_{DC}	DC power entering or exiting the FBS (W)
E_{DC}	DC energy entering or exiting the FBS (Wh)
P_{AC}	AC power entering or exiting the FBES (W)
E_{AC}	AC energy entering or exitingthe FBES (Wh)
P_{aux}	auxilary power (W)
E_{aux}	auxilary energy (Wh)
η and η_1	conversion efficiency of the transmitter in different positions. If there is no transmitter, the conversion efficiency value is 1
η_2	product of the conversion efficiencies of all the transmitters in the dashed wire frame in Figure 2 c). If there is no transmitter, the conversion efficiency value is 1
η_{PCS}	conversion efficiency of the PCS

Figure 2 – POM/POC interconnection cases a), b), c)

Documents
Document Sharing Hub
Full document details: IEC 62932-2-1-2020

5.4 Test object

In the definition of the test object, the boundary shall physically cover or include the following:

– for the FBS: BMS, BSS, pumps;
– for the FBES: BMS, BSS, pumps, PCS;
– for the TOU: BMS, BSS, pumps, with or without PCS.

In an FBES or FBS or TOU, the auxiliary energy either at DC or AC level has to be taken into account.

To ensure transparency in data, the relevant and appropriate POM and POC as defined in Figure 2, conditions a), b) or c) shall be recorded and reported.

A schematic layout of the components forming the test units and their interconnection points shall accompany the test object description.

5.5 Test object unit (TOU) selection

– The FBES or FBS shall be tested in a defined layout.
– When due to test facility, costs or similar limitations this is not possible or desirable then a representative test object unit (TOU) shall be defined and tested instead.
– This test object unit (TOU) shall encompass all components as defined in the test boundary for an FBES or an FBS.
– These components shall be sized to match the TOU if needed or possible.
– The final assembly of the TOU shall faithfully represent the full-sized FBES or FBS so that the test data obtained therewith can be extrapolated to them.
– The tested FBS, FBES or TOU shall be fully described in the relevant test report.
– Auxiliary energy data shall be scaled to the size of the TOU tested.
– All tests shall be carried out with the same and identical FBS, FBES or TOU throughout the duration of the test.

6 Test methods

6.1 Determination of energy at a constant power

6.1.1 General

This test is for determining the discharge energy of the FBES or FBS at the constant power mode, by measuring the total discharge energy outputs from the FBES or FBS and the auxiliary energy consumed by auxiliary equipment (e.g. BMS, BSS and pumps).

The FBES, FBS or TOU (collectively the "test unit"), as defined in 5.4 and 5.5, shall be in a stable temperature condition prior to measurements. The temperature and concentration of electroactive species in the fluid entering the cell or stack shall be recorded and reported.

6.1.2 Test procedures

The test shall be in accordance with the following procedures:

a) The test unit shall be connected to a load circuit which can charge or discharge the test unit as needed. Adequate equipment shall be in place to determine the auxiliary energy of the auxiliary equipment during the determination.
b) The test unit shall be fully charged with the method declared by the manufacturer.

Documents
Document Sharing Hub
Full document details: IEC 62932-2-1-2020