IEC 62946-01

Edition 1.0 2018-05

INTERNATIONAL STANDARD

colour inside

Connectors for electrical and electronic equipment – Part 01: Rectangular connectors – Detail specification for 8-way, shielded, free and fixed high density connectors for data transmission with frequencies up to 100 MHz and with current carrying capacity up to 1 A

IEC 62946-01:2018-05(en)

AVA Documents
Document Sharing Hub

Full document details: IEC 62946-01 2018

THIS PUBLICATION IS COPYRIGHT PROTECTED

Copyright © 2018 IEC, Geneva, Switzerland

All rights reserved. Unless otherwise specified, no part of this publication may be reproduced or utilized in any form or by any means, electronic or mechanical, including photocopying and microfilm, without permission in writing from either IEC or IEC's member National Committee in the country of the requester. If you have any questions about IEC copyright or have an enquiry about obtaining additional rights to this publication, please contact the address below or your local IEC member National Committee for further information.

IEC Central Office
3, rue de Varembé
CH-1211 Geneva 20
Switzerland

Tel.: +41 22 919 02 11
info@iec.ch
www.iec.ch

About the IEC
The International Electrotechnical Commission (IEC) is the leading global organization that prepares and publishes International Standards for all electrical, electronic and related technologies.

About IEC publications
The technical content of IEC publications is kept under constant review by the IEC. Please make sure that you have the latest edition, a corrigenda or an amendment might have been published.

IEC Catalogue - webstore.iec.ch/catalogue
The stand-alone application for consulting the entire bibliographical information on IEC International Standards, Technical Specifications, Technical Reports and other documents. Available for PC, Mac OS, Android Tablets and iPad.

IEC publications search - webstore.iec.ch/advsearchform
The advanced search enables to find IEC publications by a variety of criteria (reference number, text, technical committee,…). It also gives information on projects, replaced and withdrawn publications.

IEC Just Published - webstore.iec.ch/justpublished
Stay up to date on all new IEC publications. Just Published details all new publications released. Available online and also once a month by email.

Electropedia - www.electropedia.org
The world's leading online dictionary of electronic and electrical terms containing 21 000 terms and definitions in English and French, with equivalent terms in 16 additional languages. Also known as the International Electrotechnical Vocabulary (IEV) online.

IEC Glossary - std.iec.ch/glossary
67 000 electrotechnical terminology entries in English and French extracted from the Terms and Definitions clause of IEC publications issued since 2002. Some entries have been collected from earlier publications of IEC TC 37, 77, 86 and CISPR.

IEC Customer Service Centre - webstore.iec.ch/csc
If you wish to give us your feedback on this publication or need further assistance, please contact the Customer Service Centre: sales@iec.ch.

Documents
Document Sharing Hub

Full document details: IEC 62946-01 2018

IEC 62946-01

Edition 1.0 2018-05

INTERNATIONAL STANDARD

colour inside

Connectors for electrical and electronic equipment – Part 01: Rectangular connectors – Detail specification for 8-way, shielded, free and fixed high density connectors for data transmission with frequencies up to 100 MHz and with current carrying capacity up to 1 A

INTERNATIONAL
ELECTROTECHNICAL
COMMISSION

ICS 31.220.10

ISBN 978-2-8322-5724-1

Warning! Make sure that you obtained this publication from an authorized distributor.

® Registered trademark of the International Electrotechnical Commission

Documents
Document Sharing Hub

Full document details: IEC 62946-01 2018

CONTENTS

FOREWORD 4
INTRODUCTION 6
1 Scope 8
2 Normative references 8
3 Terms and definitions 9
4 Mating information 10
4.1 General 10
4.2 Contacts – mating conditions 10
4.3 Fixed female connector 10
4.4 Free male connector 13
5 Characteristics 15
5.1 General 15
5.2 Pin and pair grouping assignment 15
5.3 Classification into climatic category 16
5.4 Electrical characteristics 16
5.4.1 Voltage proof 16
5.4.2 Current-temperature derating 16
5.4.3 Initial insulation resistance 17
5.5 Transmission characteristics 17
5.5.1 General 17
5.5.2 Insertion loss 18
5.5.3 Return loss 18
5.5.4 Near end cross talk 18
5.5.5 Far end cross talk 18
5.5.6 Transverse conversion loss 18
5.5.7 Transfer conversion transfer loss 18
5.6 Mechanical characteristics 19
5.6.1 Mechanical operation 19
5.6.2 Insertion and withdrawal forces 19
6 Tests and test schedule 19
6.1 General 19
6.2 Arrangement for contact resistance measurement 20
6.2.1 General 20
6.2.2 Contact resistance calculation method 20
6.3 Arrangement for vibration test (test phase EP5)(see Figure 8) 21
6.4 Test procedures and measuring methods 21
6.5 Preconditioning 21
6.6 Test schedules 22
6.6.1 General 22
6.6.2 Basic (minimum) test schedule 22
6.6.3 Full test schedule 22

Figure 1 – Contact interface dimensions with terminated free connector 10
Figure 2 – Fixed female connector, view of contact zone 11
Figure 3 – View of contact zone section A-A 12
Figure 4 – Free male connector, view of contact zone 14

AVA Documents
Document Sharing Hub

Full document details: IEC 62946-01 2018

Figure 5 – Fixed female connector pin and pair grouping assignment, front view of connector (and conversely for the free male connector) 16
Figure 6 – Connector de-rating curve 17
Figure 7 – Arrangement for contact resistance measurement 20
Figure 8 – Arrangement for vibration test 21

Table 1 – Dimensions for Figure 1 10
Table 2 – Dimensions for Figures 2 and 3 13
Table 3 – Dimensions for Figure 4 15
Table 4 – Climatic categories – selected values 16
Table 5 – Test group P 22
Table 6 – Test group AP 23
Table 7 – Test group BP 24
Table 8 – Test group CP 25
Table 9 – Test group DP 26
Table 10 – Test group EP 27
Table 11 – Test group FP 28
Table 12 – Test group GP 29

Documents
Document Sharing Hub

Full document details: IEC 62946-01 2018

INTERNATIONAL ELECTROTECHNICAL COMMISSION

CONNECTORS FOR ELECTRICAL AND ELECTRONIC EQUIPMENT –

Part 01: Rectangular connectors – Detail specification for 8-way, shielded, free and fixed high density connectors for data transmission with frequencies up to 100 MHz and with current carrying capacity up to 1 A

FOREWORD

1) The International Electrotechnical Commission (IEC) is a worldwide organization for standardization comprising all national electrotechnical committees (IEC National Committees). The object of IEC is to promote international co-operation on all questions concerning standardization in the electrical and electronic fields. To this end and in addition to other activities, IEC publishes International Standards, Technical Specifications, Technical Reports, Publicly Available Specifications (PAS) and Guides (hereafter referred to as "IEC Publication(s)"). Their preparation is entrusted to technical committees; any IEC National Committee interested in the subject dealt with may participate in this preparatory work. International, governmental and non-governmental organizations liaising with the IEC also participate in this preparation. IEC collaborates closely with the International Organization for Standardization (ISO) in accordance with conditions determined by agreement between the two organizations.
2) The formal decisions or agreements of IEC on technical matters express, as nearly as possible, an international consensus of opinion on the relevant subjects since each technical committee has representation from all interested IEC National Committees.
3) IEC Publications have the form of recommendations for international use and are accepted by IEC National Committees in that sense. While all reasonable efforts are made to ensure that the technical content of IEC Publications is accurate, IEC cannot be held responsible for the way in which they are used or for any misinterpretation by any end user.
4) In order to promote international uniformity, IEC National Committees undertake to apply IEC Publications transparently to the maximum extent possible in their national and regional publications. Any divergence between any IEC Publication and the corresponding national or regional publication shall be clearly indicated in the latter.
5) IEC itself does not provide any attestation of conformity. Independent certification bodies provide conformity assessment services and, in some areas, access to IEC marks of conformity. IEC is not responsible for any services carried out by independent certification bodies.
6) All users should ensure that they have the latest edition of this publication.
7) No liability shall attach to IEC or its directors, employees, servants or agents including individual experts and members of its technical committees and IEC National Committees for any personal injury, property damage or other damage of any nature whatsoever, whether direct or indirect, or for costs (including legal fees) and expenses arising out of the publication, use of, or reliance upon, this IEC Publication or any other IEC Publications.
8) Attention is drawn to the Normative references cited in this publication. Use of the referenced publications is indispensable for the correct application of this publication.
9) Attention is drawn to the possibility that some of the elements of this IEC Publication may be the subject of patent rights. IEC shall not be held responsible for identifying any or all such patent rights.

International Standard IEC 62946-01 has been prepared by subcommittee 48B: Electrical connectors, of IEC technical committee 48: Electrical connectors and mechanical structures for electrical and electronic equipment.

The text of this International Standard is based on the following documents:

FDIS	Report on voting
48B/2626/FDIS	48B/2654/RVD

Full information on the voting for the approval of this International Standard can be found in the report on voting indicated in the above table.

Documents
Document Sharing Hub

Full document details: IEC 62946-01 2018

This document has been drafted in accordance with the ISO/IEC Directives, Part 2.

A list of all parts in the IEC 62946 series, published under the general title *Connectors for electrical and electronic equipment*, can be found on the IEC website.

The committee has decided that the contents of this document will remain unchanged until the stability date indicated on the IEC website under "http://webstore.iec.ch" in the data related to the specific document. At this date, the document will be

- reconfirmed,
- withdrawn,
- replaced by a revised edition, or
- amended.

A bilingual version of this publication may be issued at a later date.

IMPORTANT – The 'colour inside' logo on the cover page of this publication indicates that it contains colours which are considered to be useful for the correct understanding of its contents. Users should therefore print this document using a colour printer.

The contents of the corrigendum of March 2020 have been included in this copy.

Documents
Document Sharing Hub

Full document details: IEC 62946-01 2018

INTRODUCTION

The International Electrotechnical Commission (IEC) draws attention to the fact that it is claimed that compliance with this document may involve the use of a patent concerning connectors given in this specification.

The IEC takes no position concerning the evidence, validity and scope of this patent right.

The holder of this patent right has assured the IEC that he is willing to grant licenses with applicants throughout the world on a non-discriminatory basis and on reasonable terms and conditions. In this respect, the statement of the holder of this patent is registered with the IEC.

Information may be obtained from:

TE Connectivity Ltd.,
Shanghai HQ,
No 1528 Gumei Road,
Caohejing, 200233,
Shanghai, China.
Telephone +86-21-33980276.
E-mail: bowen.yu@te.com

Attention is drawn to the possibility that some of the elements of this International Standard may be the subject of patent rights other than those identified above. IEC shall not be held responsible for identifying any or all such patent rights.

ISO (www.iso.org/patents) and IEC (http://patents.iec.ch) maintain on-line data bases of patents relevant to their standards. Users are encouraged to consult the data bases for the most up to date information concerning patents.

AVA Documents
Document Sharing Hub

Full document details: IEC 62946-01 2018

	IEC 62946-01:2018
Subcommittee 48B: Electrical connectors	
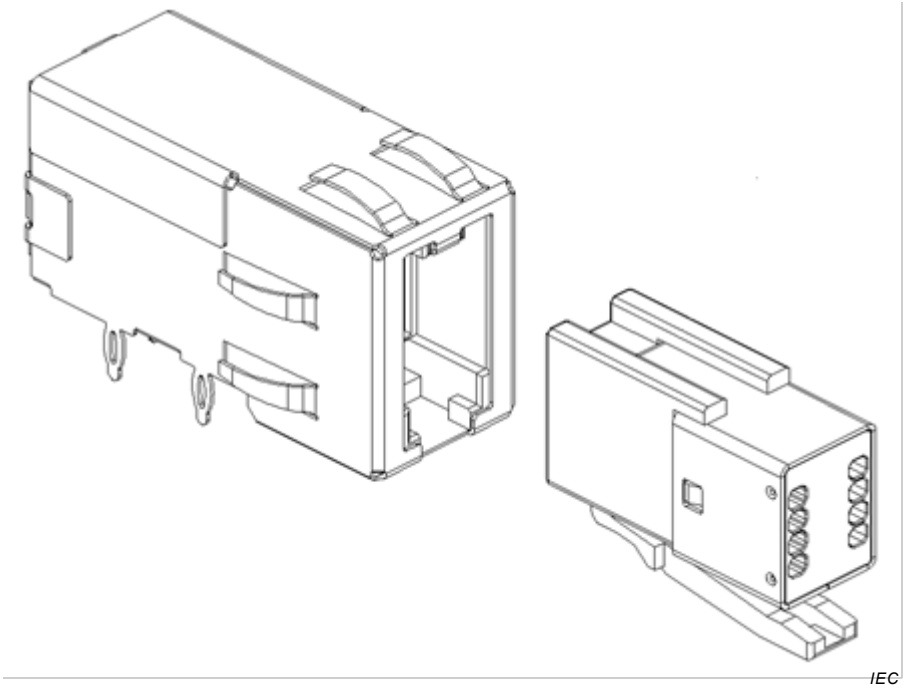	8-way, shielded, free and fixed high density connectors for data transmission for frequencies up to 100 MHz and with current carrying capacity up to 1 A.
	Fixed connectors are mounted on printed circuit board, the free connector is attached to wires.

Documents
Document Sharing Hub
Full document details: IEC 62946-01 2018

CONNECTORS FOR ELECTRICAL AND ELECTRONIC EQUIPMENT –

Part 01: Rectangular connectors – Detail specification for 8-way, shielded, free and fixed high density connectors for data transmission with frequencies up to 100 MHz and with current carrying capacity up to 1 A

1 Scope

This part of IEC 62946 covers 8-way shielded connectors, and is intended to specify the common dimensions, mechanical, electrical and environmental characteristics and tests for the family of IEC 62946-01 connectors.

These connectors are intermateable and interoperable with other IEC 62946 series connectors.

2 Normative references

The following documents are referred to in the text in such a way that some or all of their content constitutes requirements of this document. For dated references, only the edition cited applies. For undated references, the latest edition of the referenced document (including any amendments) applies.

IEC 60050-581, *International Electrotechnical Vocabulary – Part 581: Electromechanical components for electronic equipment*

IEC 60068-2-38, *Environmental testing – Part 2-38: Tests – Test Z/AD: Composite temperature/humidity cyclic test*

IEC 60512-1, *Connectors for electronic equipment – Tests and measurements – Part 1: General*

IEC 60512-1-1, *Connectors for electronic equipment – Tests and measurements – Part 1-1: General examination – Test 1a: Visual examination*

IEC 60512-1-2, *Connectors for electronic equipment – Tests and measurements – Part 1-2: General examination – Test 1b: Examination of dimension and mass*

IEC 60512-2-1, *Connectors for electronic equipment – Tests and measurements – Part 2-1: Electrical continuity and contact resistance tests – Test 2a: Contact resistance – Millivolt level method*

IEC 60512-3-1, *Connectors for electronic equipment – Tests and measurements – Part 3-1: Insulation tests – Test 3a: Insulation resistance*

IEC 60512-4-1, *Connectors for electronic equipment – Tests and measurements – Part 4-1: Voltage stress tests – Test 4a: Voltage proof*

IEC 60512-5-2, *Connectors for electronic equipment – Tests and measurements – Part 5-2: Current-carrying capacity tests – Test 5b: Current-temperature derating*

Documents
Document Sharing Hub
Full document details: IEC 62946-01 2018

IEC 60512-6-3, *Connectors for electronic equipment – Tests and measurements – Part 6-3: Dynamic stress tests – Test 6c: Shock*

IEC 60512-6-5, *Electromechanical components for electronic equipment – Basic testing procedures and measuring methods – Part 6: Dynamic stress tests – Section 5: Test 6e: Random vibration*

IEC 60512-9-1, *Connectors for electronic equipment – Tests and measurements – Part 9-1: Endurance tests – Test 9a: Mechanical operation*

IEC 60512-9-3, *Connectors for electronic equipment – Tests and measurements – Part 9-3: Endurance tests – Test 9c: Mechanical operation (engaging and separating) with electrical load*

IEC 60512-11-4, *Connectors for electronic equipment – Tests and measurements – Part 11-4: Climatic tests – Test 11d: Rapid change of temperature*

IEC 60512-11-7, *Connectors for electronic equipment – Tests and measurements – Part 11-7: Climatic tests – Test 11g: Flowing mixed gas corrosion test*

IEC 60512-11-9, *Connectors for electronic equipment – Tests and measurements – Part 11-9: Climatic tests – Test 11i: Dry heat*

IEC 60512-11-12, *Connectors for electronic equipment – Tests and measurements – Part 11-12: Climatic tests – Test 11m: Damp heat, cyclic*

IEC 60512-13-1, *Connectors for electronic equipment – Tests and measurements – Part 13-1: Mechanical operation tests – Test 13a: Engaging and separating forces*

IEC 60512-13-2, *Connectors for electronic equipment – Tests and measurements – Part 13-2: Mechanical operation tests – Test 13b: Insertion and withdrawal forces*

IEC 60512-26-100, *Connectors for electronic equipment – Tests and measurements – Part 26-100: Measurement setup, test and reference arrangements and measurements for connectors according to IEC 60603-7 – Tests 26a to 26g*

IEC 61076-1, *Connectors for electronic equipment – Product requirements – Part 1: Generic specification*

ISO/IEC 11801, *Information technology – Generic cabling for customer premises*

3 Terms and definitions

For the purposes of this document, the terms and definitions given in IEC 60050-581, IEC 61076-1 and IEC 60512-1 apply.

ISO and IEC maintain terminological databases for use in standardization at the following addresses:

- IEC Electropedia: available at http://www.electropedia.org/
- ISO Online browsing platform: available at http://www.iso.org/obp

Documents
Document Sharing Hub

Full document details: IEC 62946-01 2018