IEC 62951-7

Edition 1.0 2019-02

INTERNATIONAL STANDARD

NORME INTERNATIONALE

colour inside

Semiconductor devices – Flexible and stretchable semiconductor devices – Part 7: Test method for characterizing the barrier performance of thin film encapsulation for flexible organic semiconductor

Dispositifs à semiconducteurs – Dispositifs à semiconducteurs souples et extensibles – Partie 7: Méthode d'essai pour caractériser la performance des barrières en couches minces utilisées pour l'encapsulation des semiconducteurs organiques souples

IEC 62951-7:2019-02(en-fr)

AVA Documents
Document Sharing Hub

Full document details: IEC 62951-7 2019

THIS PUBLICATION IS COPYRIGHT PROTECTED
Copyright © 2019 IEC, Geneva, Switzerland

All rights reserved. Unless otherwise specified, no part of this publication may be reproduced or utilized in any form or by any means, electronic or mechanical, including photocopying and microfilm, without permission in writing from either IEC or IEC's member National Committee in the country of the requester. If you have any questions about IEC copyright or have an enquiry about obtaining additional rights to this publication, please contact the address below or your local IEC member National Committee for further information.

Droits de reproduction réservés. Sauf indication contraire, aucune partie de cette publication ne peut être reproduite ni utilisée sous quelque forme que ce soit et par aucun procédé, électronique ou mécanique, y compris la photocopie et les microfilms, sans l'accord écrit de l'IEC ou du Comité national de l'IEC du pays du demandeur. Si vous avez des questions sur le copyright de l'IEC ou si vous désirez obtenir des droits supplémentaires sur cette publication, utilisez les coordonnées ci-après ou contactez le Comité national de l'IEC de votre pays de résidence.

IEC Central Office
3, rue de Varembé
CH-1211 Geneva 20
Switzerland

Tel.: +41 22 919 02 11
info@iec.ch
www.iec.ch

About the IEC
The International Electrotechnical Commission (IEC) is the leading global organization that prepares and publishes International Standards for all electrical, electronic and related technologies.

About IEC publications
The technical content of IEC publications is kept under constant review by the IEC. Please make sure that you have the latest edition, a corrigendum or an amendment might have been published.

IEC publications search - webstore.iec.ch/advsearchform
The advanced search enables to find IEC publications by a variety of criteria (reference number, text, technical committee,…). It also gives information on projects, replaced and withdrawn publications.

IEC Just Published - webstore.iec.ch/justpublished
Stay up to date on all new IEC publications. Just Published details all new publications released. Available online and once a month by email.

IEC Customer Service Centre - webstore.iec.ch/csc
If you wish to give us your feedback on this publication or need further assistance, please contact the Customer Service Centre: sales@iec.ch.

Electropedia - www.electropedia.org
The world's leading online dictionary on electrotechnology, containing more than 22 000 terminological entries in English and French, with equivalent terms in 16 additional languages. Also known as the International Electrotechnical Vocabulary (IEV) online.

IEC Glossary - std.iec.ch/glossary
67 000 electrotechnical terminology entries in English and French extracted from the Terms and Definitions clause of IEC publications issued since 2002. Some entries have been collected from earlier publications of IEC TC 37, 77, 86 and CISPR.

A propos de l'IEC
La Commission Electrotechnique Internationale (IEC) est la première organisation mondiale qui élabore et publie des Normes internationales pour tout ce qui a trait à l'électricité, à l'électronique et aux technologies apparentées.

A propos des publications IEC
Le contenu technique des publications IEC est constamment revu. Veuillez vous assurer que vous possédez l'édition la plus récente, un corrigendum ou amendement peut avoir été publié.

Recherche de publications IEC - webstore.iec.ch/advsearchform
La recherche avancée permet de trouver des publications IEC en utilisant différents critères (numéro de référence, texte, comité d'études,…). Elle donne aussi des informations sur les projets et les publications remplacées ou retirées.

IEC Just Published - webstore.iec.ch/justpublished
Restez informé sur les nouvelles publications IEC. Just Published détaille les nouvelles publications parues. Disponible en ligne et une fois par mois par email.

Service Clients - webstore.iec.ch/csc
Si vous désirez nous donner des commentaires sur cette publication ou si vous avez des questions contactez-nous: sales@iec.ch.

Electropedia - www.electropedia.org
Le premier dictionnaire d'électrotechnologie en ligne au monde, avec plus de 22 000 articles terminologiques en anglais et en français, ainsi que les termes équivalents dans 16 langues additionnelles. Egalement appelé Vocabulaire Electrotechnique International (IEV) en ligne.

Glossaire IEC - std.iec.ch/glossary
67 000 entrées terminologiques électrotechniques, en anglais et en français, extraites des articles Termes et Définitions des publications IEC parues depuis 2002. Plus certaines entrées antérieures extraites des publications des CE 37, 77, 86 et CISPR de l'IEC.

AVA Documents
Document Sharing Hub

Full document details: IEC 62951-7 2019

IEC 62951-7

Edition 1.0 2019-02

INTERNATIONAL STANDARD

NORME INTERNATIONALE

colour inside

Semiconductor devices – Flexible and stretchable semiconductor devices – Part 7: Test method for characterizing the barrier performance of thin film encapsulation for flexible organic semiconductor

Dispositifs à semiconducteurs – Dispositifs à semiconducteurs souples et extensibles – Partie 7: Méthode d'essai pour caractériser la performance des barrières en couches minces utilisées pour l'encapsulation des semiconducteurs organiques souples

INTERNATIONAL
ELECTROTECHNICAL
COMMISSION

COMMISSION
ELECTROTECHNIQUE
INTERNATIONALE

ICS 31.080.99

ISBN 978-2-8322-6612-0

Warning! Make sure that you obtained this publication from an authorized distributor.
Attention! Veuillez vous assurer que vous avez obtenu cette publication via un distributeur agréé.

AVA Documents
Document Sharing Hub

® Registered trademark of the International Electrotechnical Commission
Marque déposée de la Commission Electrotechnique Internationale

Full document details: IEC 62951-7 2019

CONTENTS

FOREWORD 3
1 Scope 5
2 Normative references 5
3 Terms and definitions 5
4 Test method 6
4.1 General 6
4.2 Experimental apparatus 6
4.3 WVTR calculation 7
4.4 Measurement of Ca resistance 7
4.5 Application to flexible organic semiconductor devices 8
4.6 Measurement of barrier performance under the bending condition 9
5 Test report 10
Annex A (informative) Sample preparation and data 12
A.1 Sample preparation 12
A.2 Measurement data 12
Bibliography 14

Figure 1 – Experimental set-up for measuring resistance by the four-wire resistance measurement method 6
Figure 2 – Four-wire resistance measurement method for measuring resistance change 8
Figure 3 – Experimental set-up for measuring resistance by the four-wire resistance measurement method for flexible substrate 9
Figure 4 – Experimental set-up for measurement of barrier performance under the bending condition 10
Figure A.1 – Example of Ca sensor and its deposition procedures 12
Figure A.2 – Normalized conductance change as a function of time with linear fit 13

Documents
Document Sharing Hub
Full document details: IEC 62951-7 2019

INTERNATIONAL ELECTROTECHNICAL COMMISSION

SEMICONDUCTOR DEVICES – FLEXIBLE AND STRETCHABLE SEMICONDUCTOR DEVICES –

Part 7: Test method for characterizing the barrier performance of thin film encapsulation for flexible organic semiconductor

FOREWORD

1) The International Electrotechnical Commission (IEC) is a worldwide organization for standardization comprising all national electrotechnical committees (IEC National Committees). The object of IEC is to promote international co-operation on all questions concerning standardization in the electrical and electronic fields. To this end and in addition to other activities, IEC publishes International Standards, Technical Specifications, Technical Reports, Publicly Available Specifications (PAS) and Guides (hereafter referred to as "IEC Publication(s)"). Their preparation is entrusted to technical committees; any IEC National Committee interested in the subject dealt with may participate in this preparatory work. International, governmental and non-governmental organizations liaising with the IEC also participate in this preparation. IEC collaborates closely with the International Organization for Standardization (ISO) in accordance with conditions determined by agreement between the two organizations.
2) The formal decisions or agreements of IEC on technical matters express, as nearly as possible, an international consensus of opinion on the relevant subjects since each technical committee has representation from all interested IEC National Committees.
3) IEC Publications have the form of recommendations for international use and are accepted by IEC National Committees in that sense. While all reasonable efforts are made to ensure that the technical content of IEC Publications is accurate, IEC cannot be held responsible for the way in which they are used or for any misinterpretation by any end user.
4) In order to promote international uniformity, IEC National Committees undertake to apply IEC Publications transparently to the maximum extent possible in their national and regional publications. Any divergence between any IEC Publication and the corresponding national or regional publication shall be clearly indicated in the latter.
5) IEC itself does not provide any attestation of conformity. Independent certification bodies provide conformity assessment services and, in some areas, access to IEC marks of conformity. IEC is not responsible for any services carried out by independent certification bodies.
6) All users should ensure that they have the latest edition of this publication.
7) No liability shall attach to IEC or its directors, employees, servants or agents including individual experts and members of its technical committees and IEC National Committees for any personal injury, property damage or other damage of any nature whatsoever, whether direct or indirect, or for costs (including legal fees) and expenses arising out of the publication, use of, or reliance upon, this IEC Publication or any other IEC Publications.
8) Attention is drawn to the Normative references cited in this publication. Use of the referenced publications is indispensable for the correct application of this publication.
9) Attention is drawn to the possibility that some of the elements of this IEC Publication may be the subject of patent rights. IEC shall not be held responsible for identifying any or all such patent rights.

International Standard IEC 62951-7 has been prepared by IEC technical committee 47: Semiconductor devices.

The text of this International Standard is based on the following documents:

FDIS	Report on voting
47/2533/FDIS	47/2542/RVD

Full information on the voting for the approval of this International Standard can be found in the report on voting indicated in the above table.

This document has been drafted in accordance with the ISO/IEC Directives, Part 2.

Documents
Document Sharing Hub

Full document details: IEC 62951-7 2019

A list of all parts in the IEC 62951 series, published under the general title *Semiconductor devices – Flexible and stretchable semiconductor devices*, can be found on the IEC website.

The committee has decided that the contents of this document will remain unchanged until the stability date indicated on the IEC website under "http://webstore.iec.ch" in the data related to the specific document. At this date, the document will be

- reconfirmed,
- withdrawn,
- replaced by a revised edition, or
- amended.

IMPORTANT – The 'colour inside' logo on the cover page of this publication indicates that it contains colours which are considered to be useful for the correct understanding of its contents. Users should therefore print this document using a colour printer.

Documents
Document Sharing Hub

Full document details: IEC 62951-7 2019

SEMICONDUCTOR DEVICES – FLEXIBLE AND STRETCHABLE SEMICONDUCTOR DEVICES –

Part 7: Test method for characterizing the barrier performance of thin film encapsulation for flexible organic semiconductor

1 Scope

This part of IEC 62951 specifies evaluation conditions and gives a method of measurement as well as a test set-up for the measurement of barrier performance for thin-film layer with ultra-low permeation rate under both flat and bending conditions. This document also includes the preparation of specimen, electrical contacts, sensor films and calculation procedures. For these purposes, this document provides terms, definitions, symbols, configurations, and test methods including test conditions such as temperature, relative humidity, testing time.

2 Normative references

There are no normative references in this document.

3 Terms and definitions

For the purposes of of this document, the following terms and definitions apply.

ISO and IEC maintain terminological databases for use in standardization at the following addresses:

- IEC Electropedia: available at http://www.electropedia.org/
- ISO Online browsing platform: available at http://www.iso.org/obp

3.1
water vapour transmission rate
WVTR
amount of water vapour transmitted through unit area of test specimen per unit time under specified conditions

Note 1 to entry: Its unit is generally g/m^2 day or g/(m^2·24 h) and it means how much water vapour permeates through a 1 m by 1 m square for 1 day.

[SOURCE: ISO 15106-1:2003, 3.1, modified – the note has been expanded.]

3.2
four-wire resistance measurement
electrical resistance measuring technique that uses separate pairs of current-carrying and voltage-sensing electrodes to make more accurate measurements than the simpler and more usual two-terminal sensing

3.3
organic thin film transistor
OTFT
thin film transistor fabricated by using an organic semiconducting material

Note 1 to entry: This note applies to the French language only.

AVA Documents
Document Sharing Hub

Full document details: IEC 62951-7 2019

4 Test method

4.1 General

In the case of organic semiconductor devices, one of the main reliability issues is their susceptibility to water vapour. Hence, a high performance encapsulation layer is needed to suppress the ingress of water vapour into devices. The requirement of these barrier layers is less than 10^{-4} g/m^2 day to provide enough protection for organic devices such as OTFTs and organic diodes from the operating environment. Commercially available and published standard for WVTR measurement is only available for a barrier having 10^{-3} g/m^2 day or 10^{-4} g/m^2 day. Hence, this cannot detect the ultra-low permeation of water vapour. This document covers the measurement method for ultra-low permeation rate and general test set-up. The WVTR can be measured if the change of resistance of the Ca sensor is measured. In addition, WVTR under bending conditions needs to be measured for flexible organic electronics.

4.2 Experimental apparatus

Due to the detection limit, the test method based on the infra-red sensor for water vapour transmission rate in the published standard cannot be applied to barrier layer materials for organic semiconductors. Ca test is a widely known and used method for measuring ultra-low permeation rate of the thin-film barriers. Calcium is an electrically conducting and optically opaque metal which becomes non-conducting and transparent after oxidation by humidity. Hence, the measurement of Ca conductance or transparency changes provides an indirect method to determine the oxidation and corrosion rates of Ca induced by permeated water vapour through the barrier layer. In order to measure the electrical conductance change as a function of time, the schematics in Figure 1 a) and b) are suggested. Metal electrodes such as aluminium and Ca sensor are fabricated on the impermeable substrate against water vapour. The dimension including the thickness of the Ca sensor and electrode shall be changed according to the applications. The fabrication of each layer is described in Annex A as an example. The barrier layer which is used to measure WVTR is fabricated on top of the Ca sensor and electrodes. Figure A.2 in Annex A shows typical conductance change as a function of time measured in the test set-up illustrated in Figure 1.

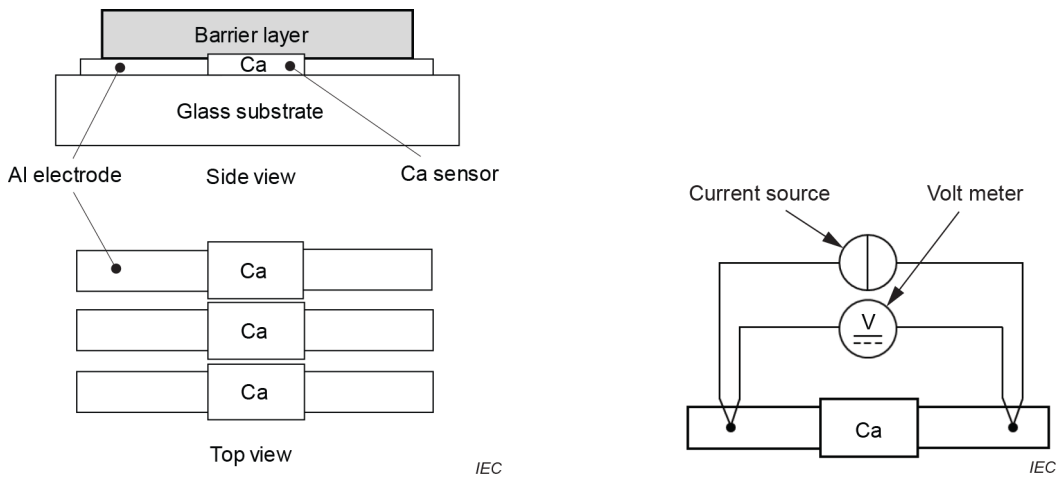

a) Side and top view of Ca test cell and Al electrical contacts

b) Top view of Ca test cell and four-wire resistance measurement

Figure 1 – Experimental set-up for measuring resistance by the four-wire resistance measurement method

Documents
Document Sharing Hub
Full document details: IEC 62951-7 2019

4.3 WVTR calculation

By using the experimental set-up described, the change of electrical resistance can be measured by the four-wire resistance measurement method. An example of data can be found in Annex A. The WVTR can be determined by monitoring the time rate of change of the electrical conductance of Ca (data in Figure A.2 in Annex A) through the use of Formula (1) which has been widely used.

$$WVTR = n\delta_{\mathrm{Ca}}\rho_{\mathrm{Ca}}\frac{dG}{dt}\frac{l}{w}\frac{M_{\mathrm{H_2O}}}{M_{\mathrm{Ca}}}\frac{A_{\mathrm{Ca}}}{A_{\mathrm{w}}} \quad (1)$$

where

n is the molar equivalent of the reaction (assumed as n = 2);

δ_{Ca} is the calcium resistivity (3,4 × 10^{-8} Ω m);

ρ_{Ca} is the calcium density (1,55 g/cm^3);

G is the electrical conductance of calcium (the value of $\frac{dG}{dt}$ in Formula (1) is from the linear fitting in the conductance change versus time as shown in Figure A.2 in Annex A);

M is the molar mass ($M_{\mathrm{H_2O}}$ and M_{Ca} are the molar masses of water vapour and of Ca, respectively);

l is the length of the calcium sensor;

w is the width of the calcium sensor;

A_{ca} is the area of the Ca sensor;

A_{w} is the area of the window.

The ratio of the area of the Ca sensor to the area of the window for water permeation and the ratio of the length is unity due to the geometry of the experimental set-up.

4.4 Measurement of Ca resistance

In order to measure the electrical conductance change accurately, the four-wire resistance measurement method is suggested to measure the resistance change, as shown in Figure 2. The four-wire resistance measurement method is an electrical impedance measuring technique that uses separate pairs of current-carrying and voltage-sensing electrodes to make more accurate measurements than the simpler and more usual two-terminal (2T) sensing. Due to imperceptible change in resistance during the Ca test, the four-wire resistance measurement method should be used.

Documents
Document Sharing Hub

Full document details: IEC 62951-7 2019

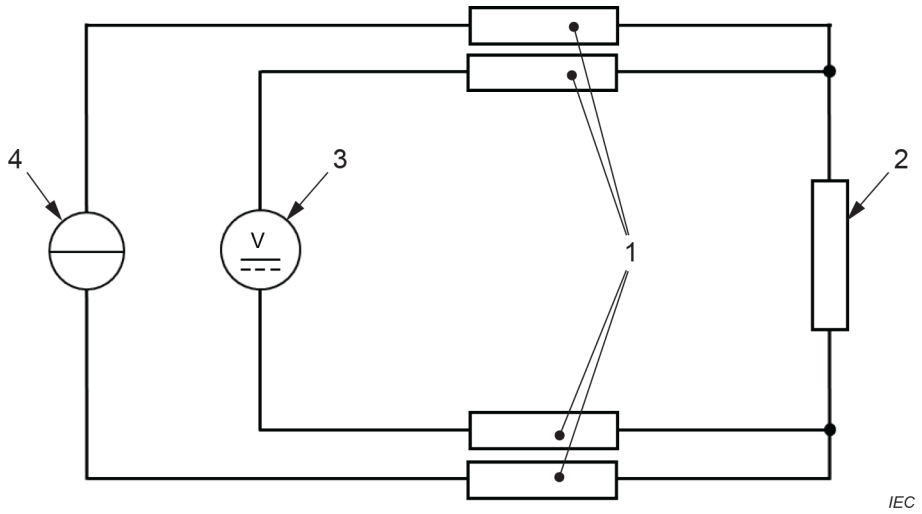

Key

1. resistance of wire;
2. resistance of Ca sensor;
3. volt meter;
4. current source.

Figure 2 – Four-wire resistance measurement method for measuring resistance change

4.5 Application to flexible organic semiconductor devices

Subclauses 4.2 to 4.4 explain the basic concept of the experimental apparatus for measurement of permeated water vapour through thin film barrier layer in one direction. Subclause 4.5 is about the experimental apparatus for measurement of permeated water vapour through both sides as shown in Figure 3. Due to the limitation of glass substrate to flexible applications, flexible substrates such as PET (polyethylene terephthalate) have been widely used. However, most of flexible substrates are permeable to water vapour. Hence, in order to decrease the amount of permeated water vapour through bottom substrate, a barrier layer should be deposited on top of the flexible substrate, as illustrated in Figure 3. Water vapour can permeate through the top barrier layer as well as the bottom flexible substrate with a barrier layer. The measurement procedure for resistance change is identical to that described in 4.2 to 4.4.

Documents
Document Sharing Hub
Full document details: IEC 62951-7 2019