IEC 62969-3

Edition 1.0 2018-05

INTERNATIONAL STANDARD

NORME INTERNATIONALE

colour inside

Semiconductor devices – Semiconductor interface for automotive vehicles – Part 3: Shock driven piezoelectric energy harvesting for automotive vehicle sensors

Dispositifs à semiconducteurs – Interface à semiconducteurs pour les véhicules automobiles – Partie 3: Récupération de l'énergie piézoélectrique produite par les chocs pour les capteurs de véhicules automobiles

IEC 62969-3:2018-05(en-fr)

Documents
Document Sharing Hub

Full document details: IEC 62969-3 2018

THIS PUBLICATION IS COPYRIGHT PROTECTED

Copyright © 2018 IEC, Geneva, Switzerland

All rights reserved. Unless otherwise specified, no part of this publication may be reproduced or utilized in any form or by any means, electronic or mechanical, including photocopying and microfilm, without permission in writing from either IEC or IEC's member National Committee in the country of the requester. If you have any questions about IEC copyright or have an enquiry about obtaining additional rights to this publication, please contact the address below or your local IEC member National Committee for further information.

Droits de reproduction réservés. Sauf indication contraire, aucune partie de cette publication ne peut être reproduite ni utilisée sous quelque forme que ce soit et par aucun procédé, électronique ou mécanique, y compris la photocopie et les microfilms, sans l'accord écrit de l'IEC ou du Comité national de l'IEC du pays du demandeur. Si vous avez des questions sur le copyright de l'IEC ou si vous désirez obtenir des droits supplémentaires sur cette publication, utilisez les coordonnées ci-après ou contactez le Comité national de l'IEC de votre pays de résidence.

IEC Central Office
3, rue de Varembé
CH-1211 Geneva 20
Switzerland

Tel.: +41 22 919 02 11
info@iec.ch
www.iec.ch

About the IEC
The International Electrotechnical Commission (IEC) is the leading global organization that prepares and publishes International Standards for all electrical, electronic and related technologies.

About IEC publications
The technical content of IEC publications is kept under constant review by the IEC. Please make sure that you have the latest edition, a corrigenda or an amendment might have been published.

IEC Catalogue - webstore.iec.ch/catalogue
The stand-alone application for consulting the entire bibliographical information on IEC International Standards, Technical Specifications, Technical Reports and other documents. Available for PC, Mac OS, Android Tablets and iPad.

IEC publications search - webstore.iec.ch/advsearchform
The advanced search enables to find IEC publications by a variety of criteria (reference number, text, technical committee,…). It also gives information on projects, replaced and withdrawn publications.

IEC Just Published - webstore.iec.ch/justpublished
Stay up to date on all new IEC publications. Just Published details all new publications released. Available online and also once a month by email.

Electropedia - www.electropedia.org
The world's leading online dictionary of electronic and electrical terms containing 21 000 terms and definitions in English and French, with equivalent terms in 16 additional languages. Also known as the International Electrotechnical Vocabulary (IEV) online.

IEC Glossary - std.iec.ch/glossary
67 000 electrotechnical terminology entries in English and French extracted from the Terms and Definitions clause of IEC publications issued since 2002. Some entries have been collected from earlier publications of IEC TC 37, 77, 86 and CISPR.

IEC Customer Service Centre - webstore.iec.ch/csc
If you wish to give us your feedback on this publication or need further assistance, please contact the Customer Service Centre: sales@iec.ch.

A propos de l'IEC
La Commission Electrotechnique Internationale (IEC) est la première organisation mondiale qui élabore et publie des Normes internationales pour tout ce qui a trait à l'électricité, à l'électronique et aux technologies apparentées.

A propos des publications IEC
Le contenu technique des publications IEC est constamment revu. Veuillez vous assurer que vous possédez l'édition la plus récente, un corrigendum ou amendement peut avoir été publié.

Catalogue IEC - webstore.iec.ch/catalogue
Application autonome pour consulter tous les renseignements bibliographiques sur les Normes internationales, Spécifications techniques, Rapports techniques et autres documents de l'IEC. Disponible pour PC, Mac OS, tablettes Android et iPad.

Recherche de publications IEC - webstore.iec.ch/advsearchform

La recherche avancée permet de trouver des publications IEC en utilisant différents critères (numéro de référence, texte, comité d'études,…). Elle donne aussi des informations sur les projets et les publications remplacées ou retirées.

IEC Just Published - webstore.iec.ch/justpublished

Restez informé sur les nouvelles publications IEC. Just Published détaille les nouvelles publications parues. Disponible en ligne et aussi une fois par mois par email.

Electropedia - www.electropedia.org

Le premier dictionnaire en ligne de termes électroniques et électriques. Il contient 21 000 termes et définitions en anglais et en français, ainsi que les termes équivalents dans 16 langues additionnelles. Egalement appelé Vocabulaire Electrotechnique International (IEV) en ligne.

Glossaire IEC - std.iec.ch/glossary
67 000 entrées terminologiques électrotechniques, en anglais et en français, extraites des articles Termes et Définitions des publications IEC parues depuis 2002. Plus certaines entrées antérieures extraites des publications des CE 37, 77, 86 et CISPR de l'IEC.

Service Clients - webstore.iec.ch/csc

Si vous désirez nous donner des commentaires sur cette publication ou si vous avez des questions contactez-nous: sales@iec.ch.

Documents
Document Sharing Hub

Full document details: IEC 62969-3 2018

IEC 62969-3

Edition 1.0 2018-05

INTERNATIONAL STANDARD

NORME INTERNATIONALE

colour inside

Semiconductor devices – Semiconductor interface for automotive vehicles – Part 3: Shock driven piezoelectric energy harvesting for automotive vehicle sensors

Dispositifs à semiconducteurs – Interface à semiconducteurs pour les véhicules automobiles – Partie 3: Récupération de l'énergie piézoélectrique produite par les chocs pour les capteurs de véhicules automobiles

INTERNATIONAL
ELECTROTECHNICAL
COMMISSION

COMMISSION
ELECTROTECHNIQUE
INTERNATIONALE

ICS 31.080.99

ISBN 978-2-8322-5685-5

Warning! Make sure that you obtained this publication from an authorized distributor.
Attention! Veuillez vous assurer que vous avez obtenu cette publication via un distributeur agréé.

® Registered trademark of the International Electrotechnical Commission
Marque déposée de la Commission Electrotechnique Internationale

AVA Documents
Document Sharing Hub

Full document details: IEC 62969-3 2018

CONTENTS

FOREWORD 4
INTRODUCTION 6
1 Scope 7
2 Normative references 7
3 Terms and definitions 7
3.1 General terms 8
3.2 Piezoelectric transducer 9
3.3 Characteristic parameters 10
4 Essential ratings and characteristic parameters 11
4.1 Identification and type 11
4.2 Limiting values and operating conditions 11
4.3 Additional information 12
5 Test method 12
5.1 General 12
5.2 Electrical characteristics 13
5.2.1 Test procedure 13
5.2.2 Capacitance 14
5.2.3 Natural frequency 14
5.2.4 Damping ratio 15
5.2.5 Output voltage 15
5.2.6 Output current 16
5.2.7 Output power 16
5.2.8 Optimal load impedance 17
5.2.9 Maximum output power 17
5.3 Mechanical characteristics 18
5.3.1 Test procedure 18
5.3.2 Temperature range 19
5.3.3 Shock magnitude 20
5.3.4 Temperature and humidity testing 20
5.3.5 Mechanical reliability (shock) testing 20
Annex A (informative) Mechanical shock pulses 21
Annex B (informative) Electromechanical coupling 23
B.1 Compliance and coupling coefficient relation 23
B.2 Young's modulus and coupling coefficient relation 23
Bibliography 24

Figure 1 – Shock driven energy harvester using cantilever with piezoelectric film 8
Figure 2 – Conceptual diagram of shock driven piezoelectric energy harvester 9
Figure 3 – Equivalent circuit of shock driven piezoelectric energy harvester 10
Figure 4 – Measurement procedure of shock driven piezoelectric energy harvester 13
Figure 5 – Test setup for the electrical characteristics of shock driven piezoelectric energy harvester 14
Figure 6 – Output waveform and its frequency component of a shock driven piezoelectric energy harvester 15
Figure 7 – Output voltages of shock excited piezoelectric energy harvester at various external loads 16

AVA Documents
Document Sharing Hub
Full document details: IEC 62969-3 2018

Figure 8 – Output currents of shock driven piezoelectric energy harvester at various output voltages 16
Figure 9 – Output power of shock driven piezoelectric energy harvester at various external loads 17
Figure 10 – Output power and voltage of shock driven piezoelectric energy harvester at various shock amplitudes 18
Figure 11 – Block diagram of a test setup for evaluating the reliability of shock driven piezoelectric energy harvester 19
Figure A.1 – Comparison of general shock patterns and shock pattern from automobile 21
Figure A.2 – Impact (or shock) recorded by an electronic impact recorder 22

Table 1 – Specification parameters for shock driven piezoelectric energy harvesters 11

Documents
Document Sharing Hub

Full document details: IEC 62969-3 2018

INTERNATIONAL ELECTROTECHNICAL COMMISSION

SEMICONDUCTOR DEVICES – SEMICONDUCTOR INTERFACE FOR AUTOMOTIVE VEHICLES –

Part 3: Shock driven piezoelectric energy harvesting for automotive vehicle sensors

FOREWORD

1) The International Electrotechnical Commission (IEC) is a worldwide organization for standardization comprising all national electrotechnical committees (IEC National Committees). The object of IEC is to promote international co-operation on all questions concerning standardization in the electrical and electronic fields. To this end and in addition to other activities, IEC publishes International Standards, Technical Specifications, Technical Reports, Publicly Available Specifications (PAS) and Guides (hereafter referred to as "IEC Publication(s)"). Their preparation is entrusted to technical committees; any IEC National Committee interested in the subject dealt with may participate in this preparatory work. International, governmental and non-governmental organizations liaising with the IEC also participate in this preparation. IEC collaborates closely with the International Organization for Standardization (ISO) in accordance with conditions determined by agreement between the two organizations.
2) The formal decisions or agreements of IEC on technical matters express, as nearly as possible, an international consensus of opinion on the relevant subjects since each technical committee has representation from all interested IEC National Committees.
3) IEC Publications have the form of recommendations for international use and are accepted by IEC National Committees in that sense. While all reasonable efforts are made to ensure that the technical content of IEC Publications is accurate, IEC cannot be held responsible for the way in which they are used or for any misinterpretation by any end user.
4) In order to promote international uniformity, IEC National Committees undertake to apply IEC Publications transparently to the maximum extent possible in their national and regional publications. Any divergence between any IEC Publication and the corresponding national or regional publication shall be clearly indicated in the latter.
5) IEC itself does not provide any attestation of conformity. Independent certification bodies provide conformity assessment services and, in some areas, access to IEC marks of conformity. IEC is not responsible for any services carried out by independent certification bodies.
6) All users should ensure that they have the latest edition of this publication.
7) No liability shall attach to IEC or its directors, employees, servants or agents including individual experts and members of its technical committees and IEC National Committees for any personal injury, property damage or other damage of any nature whatsoever, whether direct or indirect, or for costs (including legal fees) and expenses arising out of the publication, use of, or reliance upon, this IEC Publication or any other IEC Publications.
8) Attention is drawn to the Normative references cited in this publication. Use of the referenced publications is indispensable for the correct application of this publication.
9) Attention is drawn to the possibility that some of the elements of this IEC Publication may be the subject of patent rights. IEC shall not be held responsible for identifying any or all such patent rights.

International Standard IEC 62969-3 has been prepared by IEC technical committee 47: Semiconductor devices.

The text of this International Standard is based on the following documents:

FDIS	Report on voting
47/2461/FDIS	47/2480/RVD

Full information on the voting for the approval of this International Standard can be found in the report on voting indicated in the above table.

This document has been drafted in accordance with the ISO/IEC Directives, Part 2.

AVA Documents
Document Sharing Hub

Full document details: IEC 62969-3 2018

A list of all parts in the IEC 62969 series, published under the general title *Semiconductor devices – Semiconductor interface for automotive vehicles*, can be found on the IEC website.

The committee has decided that the contents of this document will remain unchanged until the stability date indicated on the IEC website under "http://webstore.iec.ch" in the data related to the specific document. At this date, the document will be

- reconfirmed,
- withdrawn,
- replaced by a revised edition, or
- amended.

IMPORTANT – The 'colour inside' logo on the cover page of this publication indicates that it contains colours which are considered to be useful for the correct understanding of its contents. Users should therefore print this document using a colour printer.

Documents
Document Sharing Hub

Full document details: IEC 62969-3 2018

INTRODUCTION

The IEC 62969 series is composed of four parts as follow:

- IEC 62969-1, *Semiconductor devices – Semiconductor interface for automotive vehicles – Part 1: General requirements of power interface for automotive vehicle sensors*
- IEC 62969-2, *Semiconductor devices – Semiconductor interface for automotive vehicles – Part 2: Efficiency evaluation methods of wireless power transmission using resonance for automotive vehicle sensors*
- IEC 62969-3, *Semiconductor devices – Semiconductor interface for automotive vehicles – Part 3: Shock driven piezoelectric energy harvesting for automotive vehicle sensors*
- IEC 62969-4[1], *Semiconductor devices – Semiconductor interface for automotive vehicles – Part 4: Evaluation method of data interface for automotive vehicle sensors*

The IEC 62969 series covers power and data interfaces for sensors in automotive vehicles. The first part covers general requirements of test conditions such as temperature, humidity, vibration, etc for automotive sensor power interface. This part also includes various electrical performances of power interface such as voltage drop from power source to automotive sensors, noises, voltage level, etc. The second part covers “Efficiency evaluation methods of wireless power transmission using resonance for automotive vehicle sensors “. The third part covers “Shock driven piezoelectric energy harvesting for automotive vehicle sensors”. The fourth part covers “Evaluation methods of data interface for automotive vehicle sensors”.

[1] To be published

Documents
Document Sharing Hub

Full document details: IEC 62969-3 2018

SEMICONDUCTOR DEVICES – SEMICONDUCTOR INTERFACE FOR AUTOMOTIVE VEHICLES –

Part 3: Shock driven piezoelectric energy harvesting for automotive vehicle sensors

1 Scope

This part of IEC 62969 describes terms, definitions, symbols, configurations, and test methods that can be used to evaluate and determine the performance characteristics of mechanical shock driven piezoelectric energy harvesting devices for automotive vehicle sensor applications.

This document is also applicable to energy harvesting devices for motorbikes, automobiles, buses, trucks and their respective engineering subsystems applications without any limitations of device technology and size.

2 Normative references

The following documents are referred to in the text in such a way that some or all of their content constitutes requirements of this document. For dated references, only the edition cited applies. For undated references, the latest edition of the referenced document (including any amendments) applies.

IEC 60749-5, *Semiconductor devices – Mechanical and climatic test methods – Part 5: Steady-state temperature humidity bias life test*

IEC 60749-10, *Semiconductor devices – Mechanical and climatic test methods – Part 10: Mechanical shock*

IEC 60749-12, *Semiconductor devices – Mechanical and climatic test methods – Part 12: Vibration, variable frequency*

IEC 62830-1, *Semiconductor devices – Semiconductor devices for energy harvesting and generation – Part 1: Vibration based piezoelectric energy harvesting*

3 Terms and definitions

For the purposes of this document, the terms and definitions given in IEC 62830-1 and the following apply.

ISO and IEC maintain terminological databases for use in standardization at the following addresses:

- IEC Electropedia: available at http://www.electropedia.org/
- ISO Online browsing platform: available at http://www.iso.org/obp

Documents
Document Sharing Hub

Full document details: IEC 62969-3 2018

3.1 General terms

3.1.1
shock
sudden acceleration or deceleration resulting in transient physical excitation; characterized by the peak acceleration, the duration, and the shape of the shock pulse (rectangular, half-sine, sawtooth, etc.)

Note 1 to entry: The fundamental frequency of the automotive vehicle shock is varied from 0,5 Hz to 20 Hz.

Note 2 to entry: Mechanical shock pulses are sinusoidal, rectangular, half-sine, sawtooth, etc. waves. Detailed explanation of mechanical shock pulses with an analysis of shock amplitude and duration/frequency of automobile and conventional shaker have been included in Annex A (informative).

3.1.2
shock driven energy harvester
generator that responds to the applied mechanical shock, transforms shock into vibration (mechanical oscillation), and converts the vibration to the electricity

Note 1 to entry: The generated power depends on the characteristics of applied shock and, mechanical and electrical characteristics of the generator itself.

Note 2 to entry: Shock energy harvester to convert shock to electricity by using piezoelectric transducers is comprised of inertial mass, spring, and piezoelectric transducer as shown in Figure 1. The piezoelectric transducer contains two electrodes and a piezoelectric film. Vibration is induced in response to the applied shock that introduces a reciprocating motion to the mass. The spring which suspends the mass is bended and the bending of spring introduces tensile and compression of piezoelectric film. The top and bottom electrodes of piezoelectric film harvest generated charges from the piezoelectric effect.

Note 3 to entry: Shock driven energy harvester is represented as shown in Figure 2. It is configured by mass, spring, damping, and piezoelectric transducer. The piezoelectric transducer is generally viewed as damping.

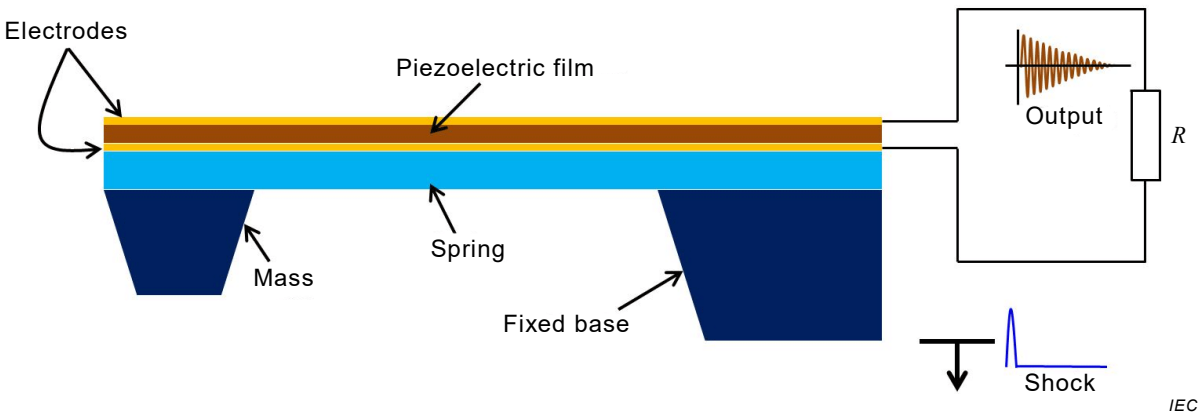

Key

Configuration of energy harvester		**Components to operate a energy harvester**	
Mass	Inertial mass to induce mechanical oscillation responding to applied shock	Shock	Transient physical excitation supplied to vibrate the mass of energy harvester
Spring	To couple the induced vibration to the mass by suspending it	R	External load
Piezoelectric film	Body layer of piezoelectric transducer for energy harvester		

Figure 1 – Shock driven energy harvester using cantilever with piezoelectric film

Documents
Document Sharing Hub
Full document details: IEC 62969-3 2018

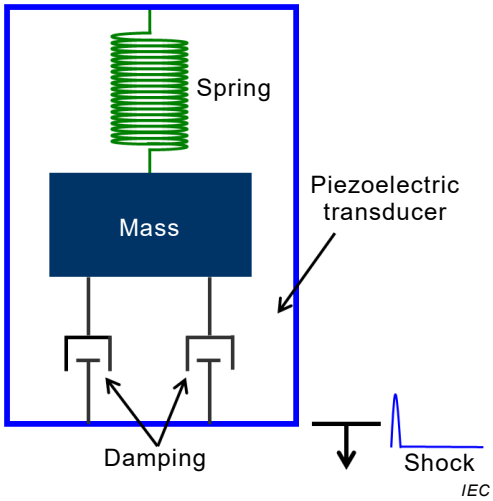

Key

Configuration of energy harvester		**Components to operate an energy harvester**	
Damping	Reduction of the acceleration of oscillation of mass	Piezoelectric transducer	Power generator via piezoelectric effect

Figure 2 – Conceptual diagram of shock driven piezoelectric energy harvester

3.2 Piezoelectric transducer

3.2.1
piezoelectric effect
phenomenon in which a mechanical deformation produces an electric polarization of piezoelectric material, and conversely an electric polarization produces a mechanical deformation

[SOURCE: IEC 60050-121:1998, 121-12-86, modified]

3.2.2
piezoelectric charge constant
d_{ij}
polarization generated per unit of mechanical stress applied to a piezoelectric material

Note 1 to entry: The first subscript to d indicates the direction of polarization generated in the material when the electric field, is zero or, alternatively, is the direction of the applied field strength. The second subscript is the direction of the applied stress or the induced strain, respectively. d_{33}: induced strain in direction Z-axis per unit electric field applied in direction Z-axis. d_{31}: induced strain in direction X-axis per unit electric field applied in direction Z-axis.

3.2.3
electromechanical coupling coefficient
k
value to describe the conversion rate of electrical energy to mechanical form or vice versa

Note 1 to entry: The coefficient is a combination of elastic, dielectric and piezoelectric constants which appears naturally in the expression of piezoelectric transducer as following

$$k = \frac{d}{(s\varepsilon)^{1/2}} \quad (1)$$

Documents
Document Sharing Hub
Full document details: IEC 62969-3 2018

where

d is the piezoelectric charge constant

s is elastic compliance (inverse of Young's modulus) at constant electric field

ε is permittivity of the piezoelectric material at constant stress

Note 2 to entry: The relationship of electromechanical coupling coefficient with compliance and Young's modulus have been elaborated in Annex B (informative).

3.3 Characteristic parameters

3.3.1
equivalent circuit

arrangement of ideal circuit elements that has circuit parameters, electrically equivalent to those of a shock driven piezoelectric energy harvester

Note 1 to entry: Shock driven piezoelectric energy harvester can be divided into mechanical and electrical parts as shown in Figure 3. The mechanical part consists of series elements m, k_{sp}, b_m, and transformer (coupling element between mechanical and electrical parts)- where m, k_{sp}, and b_m represent the effective mass, spring constant of spring, damping, respectively; and piezoelectric effect to convert mechanically induced strain to electrical charge density with coupling coefficient k. The electrical part is comprised of parallel connected C_p, R, and transformer- where C_p and R represent the capacitance between two electrodes of piezoelectric transducer and external load.

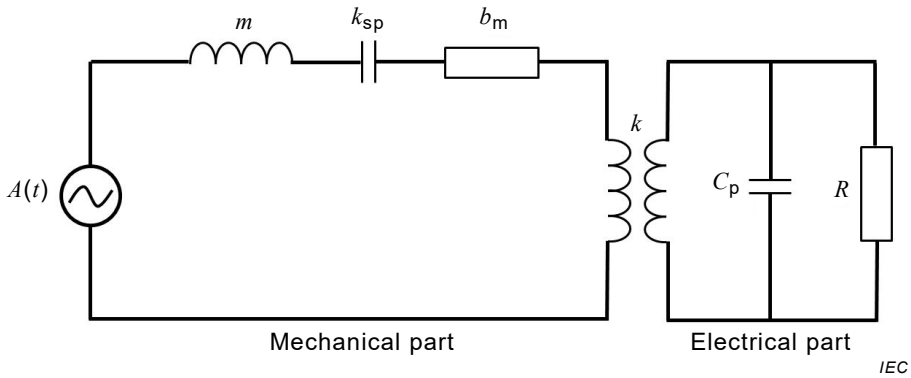

Key

Mechanical part		**Electrical part**	
m	effective mass	C_p	capacitance of piezoelectric transducer
k_{sp}	spring constant	R	external load
b_m	damping coefficient		
$A(t)$	induced vibration in response to the applied shock		

Figure 3 – Equivalent circuit of shock driven piezoelectric energy harvester

[SOURCE: IEC 60050-521:2002, 521-05-35, modified]

3.3.2
natural frequency

ω_n

free vibration frequency of the mass-spring-damping system of the energy harvester to generate largest output power

$$\omega_n = \sqrt{\frac{k_{sp}}{m}} \quad (2)$$

AVA Documents Document Sharing Hub

3.3.3
damped natural frequency
ω_d
frequency of free vibration of the mass-spring-damping system of the energy harvester incorporating damping in response to the shock excitation

$$\omega_d = \omega_n \sqrt{1-\zeta^2} \tag{3}$$

where ζ is the damping ratio determined by logarithmic decrement of output voltage waveform, normalized from electrical and mechanical damping.

3.3.4
shock excitation amplitude
acceleration amplitude of the random applied shock to the energy harvester for maximum duration as measured on the enclosure over which the energy harvester will not sustain permanent damage though not necessarily functioning within the specified tolerances

4 Essential ratings and characteristic parameters

4.1 Identification and type

The shock driven energy harvester shall be clearly and durably marked in the order given below:

a) year and week (or month) of manufacture;
b) manufacture's name or trade mark;
c) terminal identification (optional);
d) serial number;
e) factory identification code (optional).

4.2 Limiting values and operating conditions

The characteristic parameters should be listed as shown in Table 1. The manufacturer shall clearly announce the operating conditions and their limitation for energy harvesting. Limiting value is the maximum induced vibration to ensure the operation of vibration energy harvester for power generation without any damage.

Table 1 – Specification parameters for shock driven piezoelectric energy harvesters

Parameter	Symbol	Min.	Max.	Unit	Measuring conditions
Insert name of characteristic parameters					

Documents
Document Sharing Hub
Full document details: IEC 62969-3 2018

4.3 Additional information

Some additional information should be given such as equivalent circuits (natural frequency, internal impedance, output voltage and power, etc.), handling precautions, physical information (outline dimension, terminals, accessories, installation guide, etc.), package information, PCB interface and mounting information, and other information, etc.

5 Test method

5.1 General

Basically, general test procedures for shock driven energy harvester are performed as shown in Figure 4. After the energy harvester is being mounted on a test fixture, it is measured by using voltage, current, and LCR meters. Since the input impedances of these meters are usually 10 MΩ, miniaturized or micro sized energy harvesters should not be characterized accurately due to their large internal impedance. For measuring and characterizing these devices accurately, the ultra-high-impedance meters should be used.

Before connecting the energy harvester to the test fixture, meter, cable, and vibration exciter shall be calibrated. After calibration, connect test cable with mounted energy harvester test fixture on shaker table (shock exciter). The reading of output voltage or current on display of the meters is carefully taken with applied shock which is measured by the accelerometer.

NOTE Shock driven energy harvester can be measured as shown in Figure 4. After mounting the energy harvester onto a shaker table, electrical characteristic are measured by using a meter or equivalent equipment. If the measurements are satisfactory, reliability test for temperature range with thermal cycling and mechanical failure with various shock and vibration, is performed for commercially use.

Documents
Document Sharing Hub

Full document details: IEC 62969-3 2018

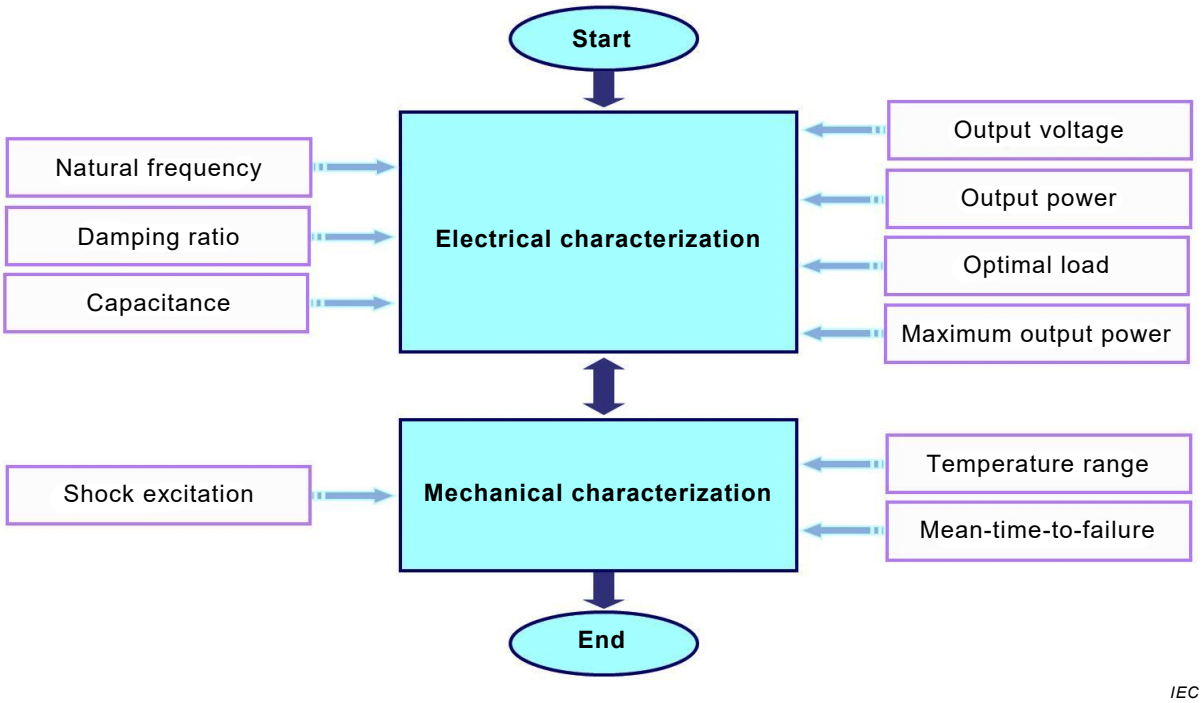

Key

Procedure	Reference subclause	Procedure	Reference subclause
Start		Optimal load	5.2.8
Electrical characterization		Maximum output power	5.2.9
Natural frequency	3.3.2 and 5.2.3	Mechanical characterization	
Damping ratio	3.3.3 and 5.2.4	Temperature range	5.3.2
Capacitance	5.2.2	Shock excitation	3.3.4 and 5.3.1
Output voltage	5.2.5	Mean-time-to-failure	5.3.3
Output power	5.2.7		

Figure 4 – Measurement procedure of shock driven piezoelectric energy harvester

5.2 Electrical characteristics

5.2.1 Test procedure

Figure 5 shows a test setup of the electrical characteristic of a shock driven piezoelectric energy harvester. To measure the electrical characteristics of a shock driven piezoelectric energy harvester, the device shall be attached on a shaker table as shown in Figure 5. When a particular type of shock with specified acceleration amplitude is applied to the device, an output voltage or current across an external load is measured.

The following test procedure is performed:

a) A specified shock is induced to the energy harvester.

b) The voltage or current across the external load which is connected to the terminals of the energy harvester is measured using a voltage or current meter.

c) The voltage and current are measured with various acceleration amplitude of shock by adjusting the amplifying ratio of power amplifier.

d) The maximum voltage and current are derived from various external loads to find the optimal load.

Documents
Document Sharing Hub
Full document details: IEC 62969-3 2018

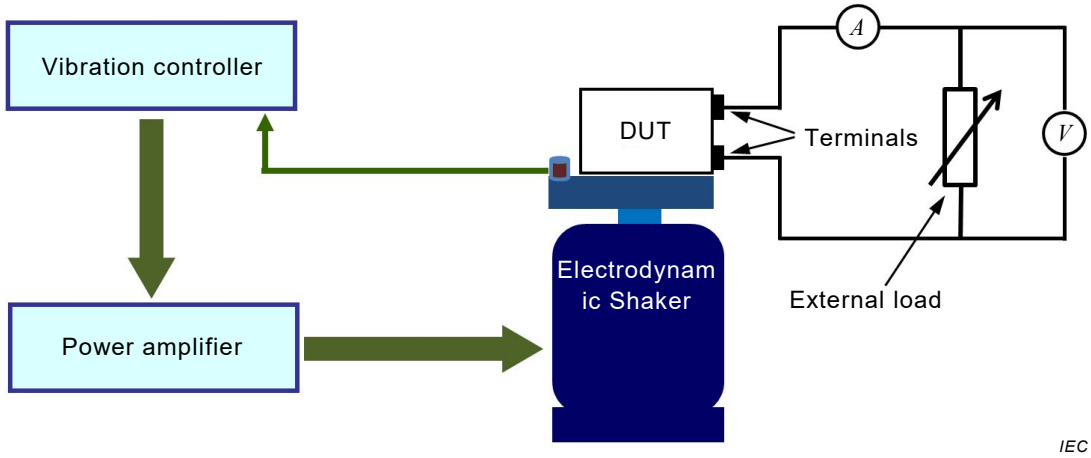

Key

Component and meters to monitor		**Equipment and supplies**	
DUT: device under test	A piece of energy harvester	Vibration controller	To produce and supply an initial drive signal (specified type of shock) to the power amplifier
Voltage meter (V)	To detect a voltage across the external load	Power amplifier	To supply a specified level of electrical power to the shock exciter
Ampere meter (A)	To detect a current through the external load	Electrodynamic Shaker	To supply a specified level and type of mechanical shock to a piece of DUT
External load (R)			

Figure 5 – Test setup for the electrical characteristics of shock driven piezoelectric energy harvester

5.2.2 Capacitance

It is a capacitance measured between two terminals of energy harvesting device. A calibration of a LCR meter shall be made in order to eliminate systematic errors occurred in the LCR meter, cable, and connectors. When the device is connected to the LCR meter, its capacitance will be displayed.

5.2.3 Natural frequency

It is the frequency, normally expressed in Hz, of the energy harvester at which its output voltage/power is obtained. Figure 6 shows the typical output voltage waveform of a sock excited energy harvester and its frequency component obtained by Fast Fourier Transform (FFT).

Documents
Document Sharing Hub
Full document details: IEC 62969-3 2018