IEC 63035

Edition 1.0 2017-06

INTERNATIONAL STANDARD

NORME INTERNATIONALE

MIDI (musical instrument digital interface) specification 1.0 (Abridged Edition, 2015)

Spécification MIDI (musical instrument digital interface) 1.0 (Edition abrégée, 2015)

IEC 63035:2017-06(en-fr)

Documents
Document Sharing Hub

Full document details: IEC 63035-2017

THIS PUBLICATION IS COPYRIGHT PROTECTED
Copyright © 2017 IEC, Geneva, Switzerland

All rights reserved. Unless otherwise specified, no part of this publication may be reproduced or utilized in any form or by any means, electronic or mechanical, including photocopying and microfilm, without permission in writing from either IEC or IEC's member National Committee in the country of the requester. If you have any questions about IEC copyright or have an enquiry about obtaining additional rights to this publication, please contact the address below or your local IEC member National Committee for further information.

Droits de reproduction réservés. Sauf indication contraire, aucune partie de cette publication ne peut être reproduite ni utilisée sous quelque forme que ce soit et par aucun procédé, électronique ou mécanique, y compris la photocopie et les microfilms, sans l'accord écrit de l'IEC ou du Comité national de l'IEC du pays du demandeur. Si vous avez des questions sur le copyright de l'IEC ou si vous désirez obtenir des droits supplémentaires sur cette publication, utilisez les coordonnées ci-après ou contactez le Comité national de l'IEC de votre pays de résidence.

IEC Central Office
3, rue de Varembé
CH-1211 Geneva 20
Switzerland

Tel.: +41 22 919 02 11
info@iec.ch
www.iec.ch

About the IEC
The International Electrotechnical Commission (IEC) is the leading global organization that prepares and publishes International Standards for all electrical, electronic and related technologies.

About IEC publications
The technical content of IEC publications is kept under constant review by the IEC. Please make sure that you have the latest edition, a corrigendum or an amendment might have been published.

IEC publications search - webstore.iec.ch/advsearchform
The advanced search enables to find IEC publications by a variety of criteria (reference number, text, technical committee,…). It also gives information on projects, replaced and withdrawn publications.

IEC Just Published - webstore.iec.ch/justpublished
Stay up to date on all new IEC publications. Just Published details all new publications released. Available online and once a month by email.

IEC Customer Service Centre - webstore.iec.ch/csc
If you wish to give us your feedback on this publication or need further assistance, please contact the Customer Service Centre: sales@iec.ch.

Electropedia - www.electropedia.org
The world's leading online dictionary on electrotechnology, containing more than 22 000 terminological entries in English and French, with equivalent terms in 16 additional languages. Also known as the International Electrotechnical Vocabulary (IEV) online.

IEC Glossary - std.iec.ch/glossary
67 000 electrotechnical terminology entries in English and French extracted from the Terms and Definitions clause of IEC publications issued since 2002. Some entries have been collected from earlier publications of IEC TC 37, 77, 86 and CISPR.

A propos de l'IEC
La Commission Electrotechnique Internationale (IEC) est la première organisation mondiale qui élabore et publie des Normes internationales pour tout ce qui a trait à l'électricité, à l'électronique et aux technologies apparentées.

A propos des publications IEC
Le contenu technique des publications IEC est constamment revu. Veuillez vous assurer que vous possédez l'édition la plus récente, un corrigendum ou amendement peut avoir été publié.

Recherche de publications IEC - webstore.iec.ch/advsearchform
La recherche avancée permet de trouver des publications IEC en utilisant différents critères (numéro de référence, texte, comité d'études,…). Elle donne aussi des informations sur les projets et les publications remplacées ou retirées.

IEC Just Published - webstore.iec.ch/justpublished
Restez informé sur les nouvelles publications IEC. Just Published détaille les nouvelles publications parues. Disponible en ligne et une fois par mois par email.

Service Clients - webstore.iec.ch/csc
Si vous désirez nous donner des commentaires sur cette publication ou si vous avez des questions contactez-nous: sales@iec.ch.

Electropedia - www.electropedia.org
Le premier dictionnaire d'électrotechnologie en ligne au monde, avec plus de 22 000 articles terminologiques en anglais et en français, ainsi que les termes équivalents dans 16 langues additionnelles. Egalement appelé Vocabulaire Electrotechnique International (IEV) en ligne.

Glossaire IEC - std.iec.ch/glossary
67 000 entrées terminologiques électrotechniques, en anglais et en français, extraites des articles Termes et Définitions des publications IEC parues depuis 2002. Plus certaines entrées antérieures extraites des publications des CE 37, 77, 86 et CISPR de l'IEC.

Documents
Document Sharing Hub

Full document details: IEC 63035-2017

IEC 63035

Edition 1.0 2017-06

INTERNATIONAL STANDARD

NORME INTERNATIONALE

MIDI (musical instrument digital interface) specification 1.0 (Abridged Edition, 2015)

Spécification MIDI (musical instrument digital interface) 1.0 (Edition abrégée, 2015)

INTERNATIONAL
ELECTROTECHNICAL
COMMISSION

COMMISSION
ELECTROTECHNIQUE
INTERNATIONALE

ICS 33.160.30; 35.040.01; 35.200

ISBN 978-2-8322-8690-6

Warning! Make sure that you obtained this publication from an authorized distributor.
Attention! Veuillez vous assurer que vous avez obtenu cette publication via un distributeur agréé.

® Registered trademark of the International Electrotechnical Commission
Marque déposée de la Commission Electrotechnique Internationale

Documents
Document Sharing Hub

Full document details: IEC 63035-2017

CONTENTS

FOREWORD 4
INTRODUCTION 6
1 Scope 7
2 Normative references 7
3 Terms and definitions 7
4 General 8
4.1 Hardware 8
4.2 Data format 10
4.3 Message types 11
4.3.1 General 11
4.3.2 Channel messages 11
4.3.3 System messages 11
4.4 Data types 12
4.4.1 General 12
4.4.2 Status bytes 12
4.4.3 Data bytes 12
4.5 Channel modes 13
4.6 Power-up default conditions 14
5 MIDI implementation chart instructions 14
5.1 Introduction 14
5.2 General 14
5.3 Function description 14
5.3.1 Basic Channel 14
5.3.2 Mode 14
5.3.3 Note Number 15
5.3.4 Velocity 15
5.3.5 Aftertouch 15
5.3.6 Pitch Bend 15
5.3.7 Control Change 15
5.3.8 Program Change 15
5.3.9 System Exclusive 15
5.3.10 System Common 15
5.3.11 System Real Time 16
5.3.12 Aux. messages 16
5.3.13 Notes 16
Annex A (normative) Summary of MIDI messages 17
Annex B (normative) Control Change messages (Data bytes) 20
B.1 Control Change messages and Channel Mode messages 20
B.2 Registered Parameter numbers 23
Annex C (normative) System Exclusive messages 25
C.1 System Exclusive messages 25
C.2 Universal System Exclusive messages 25
Annex D (normative) MIDI Implementation Chart template 30
Bibliography 31

Documents
Document Sharing Hub
Full document details: IEC 63035-2017

Figure 1 – MIDI standard hardware 9
Figure 2 – Types of MIDI bytes 10
Figure 3 – Types of MIDI messages 10
Figure 4 – Structure of a single message 11
Figure 5 – Structure of System Exclusive message 11

Table 1 – Modes for receiver 13
Table 2 – Modes for transmitter 13
Table A.1 – MIDI Specification 1.0 message summary 17
Table B.1 – Control Changes and Mode Changes (Status bytes 176 to 191) 20
Table B.2 – Registered Parameter numbers 24
Table C.1 – System Exclusive messages 25
Table C.2 – Universal System Exclusive messages 26
Table D.1 – MIDI Implementation Chart template 30

Documents
Document Sharing Hub

Full document details: IEC 63035-2017

INTERNATIONAL ELECTROTECHNICAL COMMISSION

MIDI (MUSICAL INSTRUMENT DIGITAL INTERFACE) SPECIFICATION 1.0 (Abridged Edition, 2015)

FOREWORD

1) The International Electrotechnical Commission (IEC) is a worldwide organization for standardization comprising all national electrotechnical committees (IEC National Committees). The object of IEC is to promote international co-operation on all questions concerning standardization in the electrical and electronic fields. To this end and in addition to other activities, IEC publishes International Standards, Technical Specifications, Technical Reports, Publicly Available Specifications (PAS) and Guides (hereafter referred to as "IEC Publication(s)"). Their preparation is entrusted to technical committees; any IEC National Committee interested in the subject dealt with may participate in this preparatory work. International, governmental and non-governmental organizations liaising with the IEC also participate in this preparation. IEC collaborates closely with the International Organization for Standardization (ISO) in accordance with conditions determined by agreement between the two organizations.
2) The formal decisions or agreements of IEC on technical matters express, as nearly as possible, an international consensus of opinion on the relevant subjects since each technical committee has representation from all interested IEC National Committees.
3) IEC Publications have the form of recommendations for international use and are accepted by IEC National Committees in that sense. While all reasonable efforts are made to ensure that the technical content of IEC Publications is accurate, IEC cannot be held responsible for the way in which they are used or for any misinterpretation by any end user.
4) In order to promote international uniformity, IEC National Committees undertake to apply IEC Publications transparently to the maximum extent possible in their national and regional publications. Any divergence between any IEC Publication and the corresponding national or regional publication shall be clearly indicated in the latter.
5) IEC itself does not provide any attestation of conformity. Independent certification bodies provide conformity assessment services and, in some areas, access to IEC marks of conformity. IEC is not responsible for any services carried out by independent certification bodies.
6) All users should ensure that they have the latest edition of this publication.
7) No liability shall attach to IEC or its directors, employees, servants or agents including individual experts and members of its technical committees and IEC National Committees for any personal injury, property damage or other damage of any nature whatsoever, whether direct or indirect, or for costs (including legal fees) and expenses arising out of the publication, use of, or reliance upon, this IEC Publication or any other IEC Publications.
8) Attention is drawn to the Normative references cited in this publication. Use of the referenced publications is indispensable for the correct application of this publication.
9) Attention is drawn to the possibility that some of the elements of this IEC Publication may be the subject of patent rights. IEC shall not be held responsible for identifying any or all such patent rights.

International Standard IEC 63035 has been prepared by IEC technical committee 100: Audio, video and multimedia systems and equipment.

The text of this standard is based on the following documents:

CDV	Report on voting
100/2597/CDV	100/2858/RVC

Full information on the voting for the approval of this International Standard can be found in the report on voting indicated in the above table.

This document has been drafted in accordance with the ISO/IEC Directives, Part 2.

Documents
Document Sharing Hub

Full document details: IEC 63035-2017

The committee has decided that the contents of this document will remain unchanged until the stability date indicated on the IEC website under "http://webstore.iec.ch" in the data related to the specific document. At this date, the document will be

- reconfirmed,
- withdrawn,
- replaced by a revised edition, or
- amended.

Documents
Document Sharing Hub

Full document details: IEC 63035-2017

INTRODUCTION

IEC 63035 contains the same first 8 pages as in the MIDI 1.0 Detailed Specification (the original core specification text) published by the MIDI Manufacturers Association (MMA). These are included within this standard as Clauses 1 to 4. This specification was submitted to the IEC under the auspices of a special agreement between the IEC and the MMA.

The MMA is a non-profit corporation that serves as a support organization and forum for the advancement and adoption of MIDI technology (along with the Association of Musical Electronics Industry, or AMEI, in Japan).

The MIDI 1.0 technology dates back to 1983 when the protocol and electrical specification comprised 8 pages and the majority of the message identifiers were not yet defined. Over the subsequent years, the MMA and AMEI determined consensus of the worldwide MIDI industry, and defined numerous additional messages (via Confirmation of Approval documents), as well as many Recommended Practices for the use of MIDI technology, all the while maintaining MIDI as "1.0" (meaning that no significant changes were made to the initial specification).

The MMA documentation for MIDI 1.0 now encompasses more than 50 different documents in print or on the World Wide Web. This standard contains the same first 8 pages as in the MMA's MIDI 1.0 Detailed Specification but does not contain all of the subsequent information developed by MMA/AMEI. Rather, this document contains a complete listing (with basic description) of all defined MIDI messages to date, with references to the appropriate MMA documentation. Companies that want to implement MIDI technology are advised to also consult the MMA documentation that is listed in the Biography.

Although the MIDI 1.0 Detailed Specification includes an electrical connection specification ("MIDI-DIN"), other transports (USB, Firewire, etc.) have also been approved by MMA/AMEI for use with MIDI Protocol. For details and documentation of approved physical transports, please contact the MIDI Manufacturers Association.

The term "MIDI" is known all around the world as referring to the technology which is defined in the MMA/AMEI documents, and so should not be used for any other purpose. Companies that implement MIDI technology in their products in compliance with MMA specifications may use the term MIDI to describe their products, but may not use the term to describe any extensions or enhancements that are not defined by MMA/AMEI. Only MMA/AMEI can define the messages, transport payloads, and Recommend Practices which are promoted as "MIDI" so as to prevent any dilution and confusion of the meaning of "MIDI". Implementers of MIDI technology should consult MMA and/or AMEI (depending on the relevant market) for specific trademark usage policies.

Documents
Document Sharing Hub

Full document details: IEC 63035-2017

MIDI (MUSICAL INSTRUMENT DIGITAL INTERFACE) SPECIFICATION 1.0 (Abridged Edition, 2015)

1 Scope

This International Standard specifies a hardware and software specification which makes it possible to exchange symbolic music and control information between different musical instruments or other devices such as sequencers, computers, lighting controllers, mixers, etc. using MIDI technology (musical instrument digital interface).

2 Normative references

The following documents are referred to in the text in such a way that some or all of their content constitutes requirements of this document. For dated references, only the edition cited applies. For undated references, the latest edition of the referenced document (including any amendments) applies.

IEC 60130-9, *Connectors for frequencies below 3 MHz – Part 9: Circular connectors for radio and associated sound equipment*

3 Terms and definitions

For the purposes of this document, the following terms and definitions apply.

ISO and IEC maintain terminological databases for use in standardization at the following addresses:

- IEC Electropedia: available at http://www.electropedia.org/
- ISO Online browsing platform: available at http://www.iso.org/obp

3.1
velocity
parameter which typically changes the intensity and resultant volume of the note that is being played and varies according to the force applied

Note 1 to entry: Velocity is used as Key Velocity as in a piano key.

3.2
aftertouch
parameter that measures the level of intensity applied to a note after it has been played and continues to be depressed

Note 1 to entry: Typically, Aftertouch is useful for adding vibrato or tremolo effects to a sound in much the same way that a violin can add volume or pitch changes to a sustained note using finger vibrato or additional bowing intensity.

3.3
modulation wheel
wheel controller found on synthesizers that players can use to progressively introduce modulation depth to a sound

Documents
Document Sharing Hub
Full document details: IEC 63035-2017

3.4
pitch wheel
wheel type device, normally found to the left of a synthesizer keyboard, used to manipulate the pitch of a played note or notes

3.5
pitch bend
activity or message, generally initiated by a pitch wheel, that smoothly raises and/or lowers the pitch of note or chord

3.6
oscillator
circuitry or software program that generates the kernel of a synthesizer sound

Note 1 to entry: In the early days, oscillators generated fairly basic sound types (sawtooth, square, pulse etc). In modern synthesizer engines, oscillators can be driven by myriad waveforms and samples.

3.7
pan
parameter that specifies the location of a sound within the stereo field

4 General

4.1 Hardware

The hardware MIDI interface operates at 31,25 × (1 ± 1 %) kBd asynchronous, with a start bit, 8 data bits (D0 to D7), and a stop bit. This makes a total of 10 bits for a period of 320 μs per serial byte. The start bit is a logical 0 (current on) and the stop bit is a logical 1 (current off). Bytes are sent LSB first.

Circuit: (See Figure 1). 5 mA current loop type. Logical 0 is current ON. One output shall drive one and only one input. To avoid ground loops, and subsequent data errors, the transmitter circuitry and receiver circuitry are internally separated by an opto-isolator (a light emitting diode and a photo sensor which share a single, sealed package). The receiver shall require less than 5 mA to turn on. Rise and fall times should be less than 2 μs.

Connectors: DIN 5 pin (180°) female panel mount receptacle which is specified in IEC 60130-9 as type designation IEC-04. The connectors shall be labelled "MIDI IN" and "MIDI OUT". Note that pins 1 and 3 are not used, and should be left unconnected in the receiver and transmitter. Pin 2 of the MIDI In connector should also be left unconnected.

The grounding shield connector on the MIDI jacks should not be connected to any circuit or chassis ground.

When MIDI Thru information is obtained from a MIDI In signal, transmission may occasionally be performed incorrectly due to signal degradation (caused by the response time of the opto-isolator) between the rising and falling edges of the square wave. These timing errors will tend to add up in the "wrong direction" as more devices are chained between MIDI Thru and MIDI In jacks. The result is that, regardless of circuit quality, there is a limit to the number of devices which can be chained (series-connected) in this fashion.

Documents
Document Sharing Hub
Full document details: IEC 63035-2017

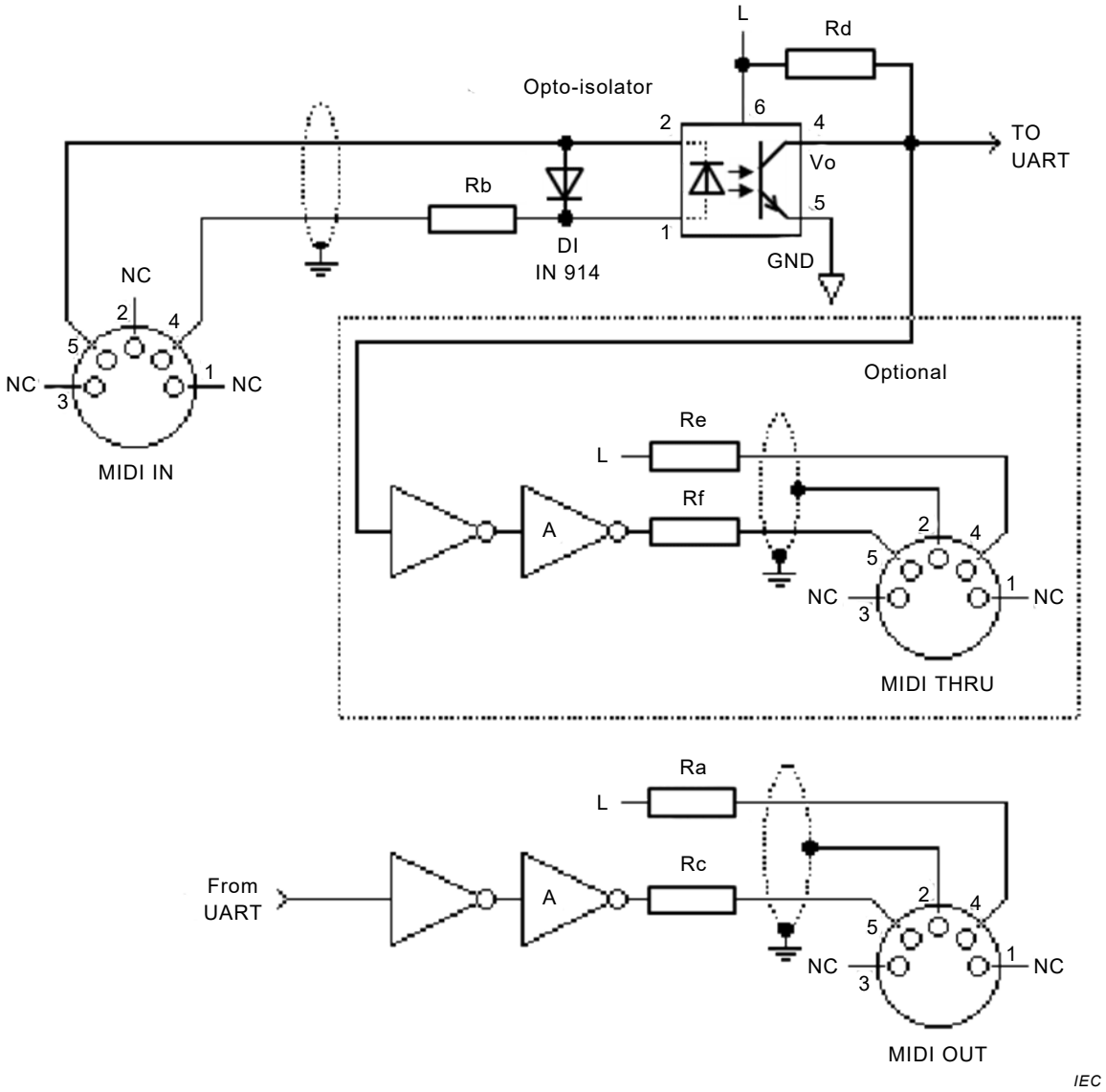

Key

Components		**Supplies**
Ra, Rb, Rc, Re, Rf	resistor R = 220 Ω	L +5 V
Rd	resistor R = 280 Ω	

NOTE 1 Opto-isolator shown is Sharp PC-900. (HP 6N138 or other opto-isolator can be used with appropriate changes.)

NOTE 2 Gates "A" are IC or transistor.

NOTE 3 Resistors are 5 %.

Figure 1 – MIDI standard hardware

Cables shall have a maximum length of 15 m, and shall be terminated on each end by a corresponding 5-pin DIN male plug which is specified in IEC 60130-9 as type designation IEC-03. The cable shall be shielded twisted pair, with the shield connected to pin 2 at both ends.

A MIDI Thru output may be provided if needed, which provides a direct copy of data coming in MIDI In. For long chain lengths (more than three instruments), higher-speed opto-isolators should help to avoid additive rise/fall time errors which affect pulse width duty cycle.

Documents
Document Sharing Hub
Full document details: IEC 63035-2017

4.2 Data format

MIDI communication is achieved through multi-byte "messages" consisting of one Status byte followed by one or two Data bytes. Real-Time and Exclusive messages are an exception.

A MIDI-equipped instrument typically contains a receiver and a transmitter. Some instruments may contain only a receiver or only a transmitter. A receiver accepts messages in MIDI format and executes MIDI commands. It consists of an opto-isolator, Universal Asynchronous Receiver/Transmitter (UART), and any other hardware needed to perform the intended functions. A transmitter originates messages in MIDI format, and transmits them by way of a UART and line driver.

MIDI makes it possible for a user of MIDI-compatible equipment to expand the number of instruments in a music system and to change system configurations to meet changing requirements.

MIDI messages are sent over any of 16 channels which are used for a variety of performance information. There are five major types of MIDI messages: Channel Voice, Channel Mode, System Common, System Real-Time and System Exclusive.

A MIDI event is transmitted as a "message" and consists of one or more bytes. Figure 2 to Figure 5 show the structure and classification of MIDI data.

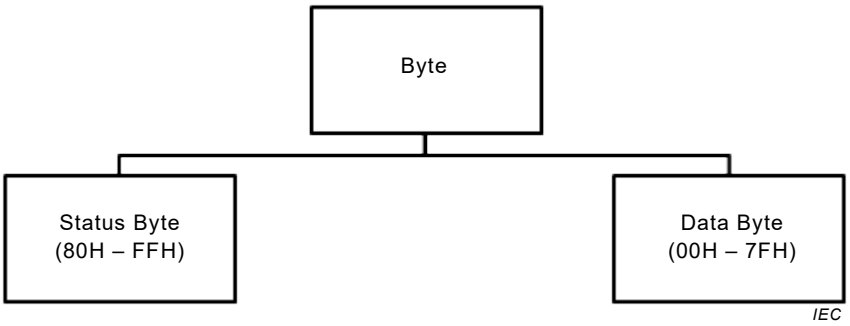

Figure 2 – Types of MIDI bytes

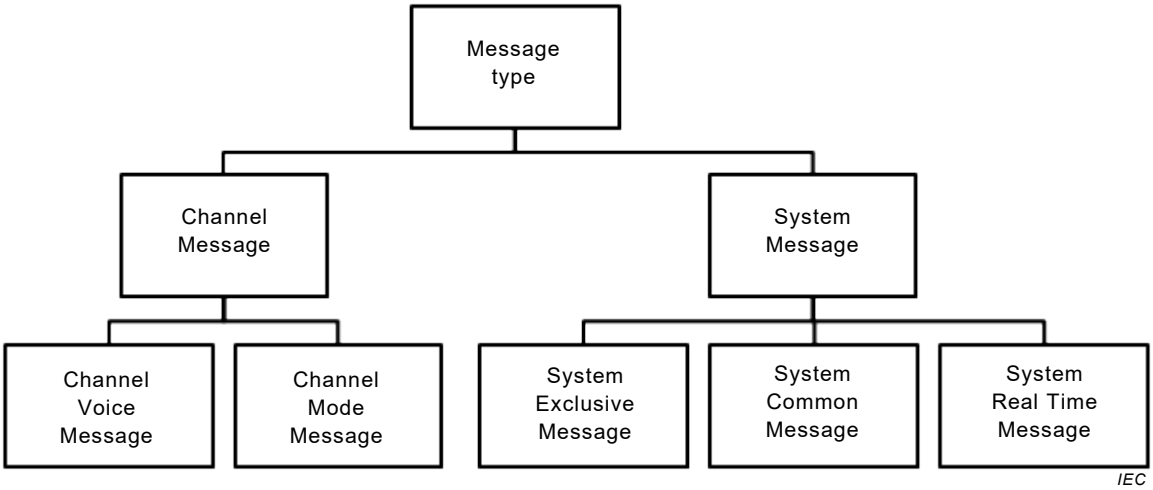

Figure 3 – Types of MIDI messages

Documents
Document Sharing Hub
Full document details: IEC 63035-2017

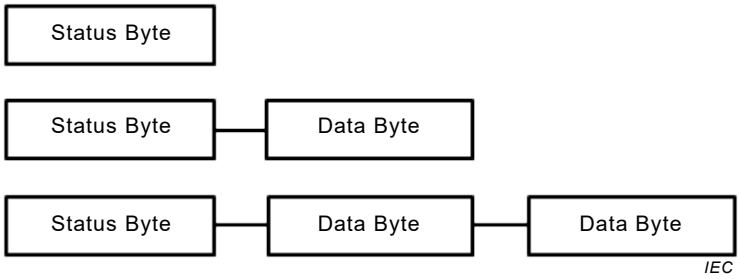

Figure 4 – Structure of a single message

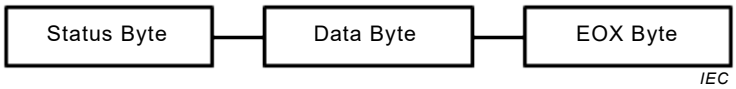

Figure 5 – Structure of System Exclusive message

4.3 Message types

4.3.1 General

Messages are divided into two main categories: Channel and System.

4.3.2 Channel messages

A Channel message uses four bits in the Status byte to address the message to one of sixteen MIDI channels and four bits to define the message (see Annex A). Channel messages are thereby intended for the receivers in a system whose channel number matches the channel number encoded into the Status byte.

An instrument can receive MIDI messages on more than one channel. The channel in which it receives its main instructions, such as which program number to be on and what mode to be in, is referred to as its "Basic Channel". An instrument may be set up to receive performance data on multiple channels (including the Basic Channel). These are referred to as "Voice Channels". These multiple-channel situations will be discussed in more detail later (see 4.5).

There are two types of Channel messages: Voice and Mode.

- VOICE: To control an instrument's voices, Voice messages are sent over the Voice Channels.
- MODE: To define the instrument's response to Voice messages, Mode messages are sent over an instrument's Basic Channel.

4.3.3 System messages

System messages are not encoded with channel numbers. There are three types of System messages: Common, Real-Time, and Exclusive.

- COMMON: Common messages are intended for all receivers in a system regardless of channel.
- REAL-TIME: Real-Time messages are used for synchronization and are intended for all clock-based instruments in a system. They contain Status bytes only – no Data bytes. Real-Time messages may be sent at any time – even between bytes of a message which has a different status. In such cases the Real-Time message is either acted upon or ignored, after which the receiving process resumes under the previous status.

Documents
Document Sharing Hub
Full document details: IEC 63035-2017

- EXCLUSIVE: Exclusive messages can contain any number of Data bytes, and can be terminated either by an End of Exclusive (EOX) or any other Status byte (except Real Time messages). An EOX should always be sent at the end of a System Exclusive message. These messages include a Manufacturer's Identification (ID) code. If a receiver does not recognize the ID code, it should ignore the following data.

  So that other users and third party developers can fully access their instruments, manufacturers shall publish the format of the System Exclusive data following their ID code. Only the manufacturer can define or update the format following their ID.

4.4 Data types

4.4.1 General

There are two types of bytes sent over MIDI: Status Bytes and Data bytes.

4.4.2 Status bytes

4.4.2.1 General

Status bytes are eight-bit binary numbers in which the Most Significant Bit (MSB) is set (binary 1). Status bytes serve to identify the message type, that is, the purpose of the Data bytes which follow it. Except for Real-Time messages, new Status bytes will always command a receiver to adopt a new status, even if the last message was not completed.

4.4.2.2 Running status

For Voice and Mode messages only. When a Status byte is received and processed, the receiver will remain in that status until a different Status byte is received. Therefore, if the same Status byte would be repeated, it can optionally be omitted so that only the Data bytes need to be sent. Thus, with Running Status, a complete message can consist of only Data bytes.

Running Status is especially helpful when sending long strings of Note On/Off messages, where "Note On with Velocity of 0" is used for Note Off.

Running Status will be stopped when any other Status byte intervenes. Real-Time messages should not affect Running Status.

4.4.2.3 Unimplemented status

Any status bytes, and subsequent data bytes, received for functions not implemented in a receiver should be ignored.

4.4.2.4 Undefined status

All MIDI instruments should be careful to never send any undefined status bytes. If an instrument receives any such code, it should be ignored without causing any problems to the system. Care should also be taken during power-up and power-down that no messages be sent out the MIDI Out port. Such noise, if it appears on a MIDI line, could cause a data or framing error if the number of bits in the byte is incorrect.

4.4.3 Data bytes

Following a Status byte (except for Real-Time messages) there are either one or two Data bytes which carry the content of the message. Data bytes are eight-bit binary numbers in which the Most Significant Bit (MSB) is always set to binary 0. The number and range of Data bytes which shall follow each Status byte are specified in Annex A and Annex B. For each Status byte the correct number of Data bytes shall always be sent. Inside a receiver, action on the message should wait until all Data bytes required under the current status are received. Receivers should ignore Data bytes which have not been properly preceded by a valid Status byte (with the exception of "Running Status," explained above).

AVA Documents
Document Sharing Hub

Full document details: IEC 63035-2017

4.5 Channel modes

Synthesizers and other instruments contain sound generation elements called voices. Voice assignment is the algorithmic process of routing Note On/Off data from incoming MIDI messages to the voices so that notes are correctly sounded.

NOTE When we refer to an "instrument", please note that it is possible for one physical instrument to act as several virtual instruments (i.e. a synthesizer set to a 'split' mode operates like two individual instruments). Here, "instrument" refers to a virtual instrument and not necessarily one physical instrument.

Four Mode messages are available for defining the relationship between the sixteen MIDI channels and the instrument's voice assignment. The four modes are determined by the properties Omni (On/Off), Poly, and Mono. Poly and Mono are mutually exclusive, i.e., Poly disables Mono, and vice versa. Omni, when on, enables the receiver to receive Voice messages on all voice Channels. When Omni is off, the receiver will accept Voice messages from only selected Voice Channel(s). Mono, when on, restricts the assignment of Voices to just one voice per Voice Channel (Monophonic.) When Mono is off (Poly On), a number of voices may be allocated by the Receiver's normal voice assignment (Polyphonic) algorithm.

For a receiver assigned to Basic Channel "N," (1 to 16) the four possible modes arising from the two Mode messages are shown in Table 1.

Table 1 – Modes for receiver

Mode	Omni	Poly/Mono	Description
1	On	Poly	Voice messages are received from all Voice channels and assigned to voices polyphonically.
2	On	Mono	Voice messages are received from all Voice Channels, and control only one voice, monophonically.
3	Off	Poly	Voice messages are received in Voice channel N only, and are assigned to voices polyphonically.
4	Off	Mono	Voice messages are received in Voice channels N through N+M-1, and assigned monophonically to voices 1 through M, respectively. The number of voices "M" is specified by the third byte of the Mono Mode Message.

Four modes are applied to transmitters (also assigned to Basic Channel N) (see Table 2). Transmitters with no channel selection capability should transmit on Basic Channel 1 (N=1).

Table 2 – Modes for transmitter

Mode	Omni	Poly/Mono	Description
1	On	Poly	All voice messages are transmitted in Channel N.
2	On	Mono	Voice messages for one voice are sent in Channel N.
3	Off	Poly	Voice messages for all voices are sent in Channel N.
4	Off	Mono	Voice messages for voices 1 through M are transmitted in Voice Channels N through N+M-1, respectively. (Single voice per channel).

A MIDI receiver or transmitter operates under only one Channel Mode at a time. If a mode is not implemented on the receiver, it should ignore the message (and any subsequent data bytes), or switch to an alternate mode, usually Mode 1 (Omni On/Poly).

Mode messages will be recognized by a receiver only when received in the instrument's Basic Channel – regardless of which mode the receiver is currently assigned to. Voice messages may be received in the Basic Channel and in other Voice Channels, according to the above specifications.

AVA Documents
Document Sharing Hub

Full document details: IEC 63035-2017

Since a single instrument may function as multiple "virtual" instruments, it can thus have more than one basic channel. Such an instrument behaves as though it is more than one receiver, and each receiver can be set to a different Basic Channel. Each of these receivers may also be set to a different mode, either by front panel controls or by Mode messages received over MIDI on each basic channel. Although not a true MIDI mode, instruments operating in this fashion are described as functioning in "Multi Mode."

An instrument's transmitter and receiver may be set to different modes. For example, an instrument may receive in Mono mode and transmit in Poly mode. It is also possible to transmit and receive on different channels. For example, an instrument may receive on Channel 1 and transmit on Channel 3.

4.6 Power-up default conditions

It is recommended that at power-up, the basic channel should be set to 1, and the mode set to Omni On/Poly (Mode 1). This, and any other default conditions for the particular instrument, should be maintained indefinitely (even when powered down) until instrument panel controls are operated or MIDI data is received. However, the decision to implement the above is left totally up to the designer.

5 MIDI implementation chart instructions

5.1 Introduction

The standard MIDI implementation chart is used as a quick reference of transmitter and receiver functions so that users can easily recognize what messages and functions are implemented in the instrument. This chart should be included in the users manual of all MIDI products. For example, if a user intends to connect two MIDI instruments, they might compare the "Transmitted" part of one instrument's chart, with the "Recognized" part of the other instrument's chart by overlapping them. For this reason, each chart should be the same size and have the same number of lines.

A chart template is provided in Table D.1.

5.2 General

a) The "[ ]" brackets at the top of the chart are used for the instrument's name such as, [LINEAR WAVETABLE SYNTHESIZER].

b) The item "Model" should be used for the model number, such as "LW-1".

c) The body of the implementation chart is divided into four columns. The first column is the specific function or item, the next two columns give information on whether the specified function is transmitted and/or received, and the fourth column is used for remarks. This last column is useful to explain anything unique to this implementation.

5.3 Function description

5.3.1 Basic Channel

- Default: Channel which is assigned when power is first applied to instrument.
- Changed: Channels which can be assigned from the instrument's front panel.

5.3.2 Mode

- Default: This is the channel mode used by a Transmitter and Receiver when power is first applied. This should be written as Mode x (where x is 1 through 4), as shown on the bottom of sheet.
- Messages: These are the mode messages which can be transmitted or received, such as OMNI ON/OFF, MONO ON, and POLY ON. MONO ON and POLY ON may be written in the short form "MONO", "POLY".

AVA Documents
Document Sharing Hub

Full document details: IEC 63035-2017

- Altered: This shows the channel modes which are not implemented by a receiver and the modes which are substituted. For example, if the receiver cannot accept "MONO ON" mode, but will switch to "OMNI ON" mode in order to receive the MIDI data, the following expression should be used: "MONO ON > OMNI ON" or "MONO > OMNI".

5.3.3 Note Number

- Note Number: The total range of transmitted or recognized notes.
- True Voice: Range of received note numbers falling within the range of true notes produced by the instrument.

5.3.4 Velocity

Note On/Note Off: Velocity is marked with an "o" for implemented or an "x" for not implemented. In the space following the "o" or "x", it may be mentioned how the Note On or Off data is being transmitted.

5.3.5 Aftertouch

"o" for implemented or "x" for not implemented.

5.3.6 Pitch Bend

"o" for implemented or "x" for not implemented.

5.3.7 Control Change

Space is given in this area for listing of any implemented control numbers. An "o" or "x" should be placed in the appropriate Transmitted or Recognized column, and the function of the specified control number should be listed in the Remarks column.

5.3.8 Program Change

"o" for implemented or an "x" for not implemented. If implemented, the range of numbers should be included.

True # (Number): The range of the program change numbers which correspond to the actual number of patches selected.

5.3.9 System Exclusive

"o" for implemented or "x" for not implemented. A full description of the instrument's System Exclusive implementation should be included on separate pages.

5.3.10 System Common

"o" for implemented or "x" for not implemented. The following abbreviations are used:

- Song Pos = Song Position
- Song Sel = Song Select
- Tune = Tune Request

Documents
Document Sharing Hub
Full document details: IEC 63035-2017

5.3.11 System Real Time

"o" for implemented or "x" for not implemented. The following abbreviations are used:

- Clock = Timing Clock
- Commands = Start, Continue and Stop

5.3.12 Aux. messages

"o" for implemented or an "x" for not implemented. The following abbreviations are used:

- Aux = Auxiliary
- Active Sense = Active Sensing

5.3.13 Notes

The "Notes" column can be any comments such as:

Power Up messages transmitted, implementation of program changes to additional memory banks, etc.

Documents
Document Sharing Hub

Full document details: IEC 63035-2017

Annex A
(normative)

Summary of MIDI messages

The following table lists many of the major MIDI messages in numerical (binary) order. Table A.1 is intended as an overview of MIDI. Additional messages and their detailed explanations are listed in The Complete MIDI 1.0 Detailed Specification and in the Confirmation of Approvals (see Bibliography).

Some Status Numbers are reserved for future extension. Those numbers should not be used in any product that is promoted as being "MIDI compatible" until defined by MMA/AMEI.

Table A.1 – MIDI Specification 1.0 message summary

Status D7----D0	Data Byte(s) D7----D0	Description
Channel Voice Messages [nnnn = 0 to 15 (MIDI Channel Number 1 to 16)]		
1000nnnn	0kkkkkkk 0vvvvvvv	Note Off event. This message is sent when a note is released (ended). (kkkkkkk) is the key (note) number. (vvvvvvv) is the velocity.
1001nnnn	0kkkkkkk 0vvvvvvv	Note On event. This message is sent when a note is depressed (start). (kkkkkkk) is the key (note) number. (vvvvvvv) is the velocity. Vvvvvvv = 0: Note Off (with velocity of 64)
1010nnnn	0kkkkkkk 0vvvvvvv	Polyphonic Key Pressure (Aftertouch). This message is most often sent by pressing down on the key after it "bottoms out". (kkkkkkk) is the key (note) number. (vvvvvvv) is the pressure value.
1011nnnn	0ccccccc 0vvvvvvv	Control Change. This message is sent when a controller value changes. Controllers include devices such as pedals and levers. Controller numbers 120 to 127 are reserved as "Channel Mode Messages" (below). (ccccccc) is the controller number (0 to 119). (vvvvvvv) is the controller value (0 to 127). (see Annex B)
1100nnnn	0ppppppp	Program Change. This message is sent when the patch number changes. (ppppppp) is the new program number.
1101nnnn	0vvvvvvv	Channel Pressure (Aftertouch). This message is most often sent by pressing down on the key after it "bottoms out". This message is different from Polyphonic Key Pressure (Aftertouch). Use this message to send the single greatest pressure value (of all the current depressed keys). (vvvvvvv) is the pressure value.
1110nnnn	0lllllll 0mmmmmmm	Pitch Wheel Change. This message is sent to indicate a change in the pitch wheel. The pitch wheel is measured by a fourteen bit value. Center (no pitch change) is 2000 H. Sensitivity is a function of the transmitter. (lllllll) are the least significant 7 bits. (mmmmmmm) are the most significant 7 bits.
Channel Mode Messages		
1011nnnn	0ccccccc 0vvvvvvv	Channel Mode Messages. This is the same Status Byte value as the Control Change, but

Documents
Document Sharing Hub
Full document details: IEC 63035-2017

Status D7----D0	Data Byte(s) D7----D0	Description
		implements Mode control and special message by using reserved controller numbers 120 to 127. The commands are: – All Sound Off. When All Sound Off is received, all oscillators will turn off, and their volume envelopes are set to zero as soon as possible. • c = 120, v = 0: All Sound Off – Reset All Controllers. When Reset All Controllers is received, all controller values are reset to their default values. (see Bibliography, RP-015 for defaults and specific Recommended Practices for other specified applications). • c = 121, v = x: Value shall only be zero unless otherwise allowed in a specific Recommended Practice. – Local Control. When Local Control is Off, all instruments on a given channel will respond only to data received over MIDI. Played data, etc. will be ignored. Local Control On restores the functions of the normal controllers. • c = 122, v = 0: Local Control Off • c = 122, v = 127: Local Control On – All Notes Off. When an All Notes Off is received, all oscillators will turn off. • c = 123, v = 0: All Notes Off • c = 124, v = 0: Omni Mode Off • c = 125, v = 0: Omni Mode On • c = 126, v = M: Mono Mode On (Poly Off) where M is the number of channels (Omni Off) or 0 (Omni On) • c = 127, v = 0: Poly Mode On (Mono Off) (Note: c = 124 to 127 also cause All Notes Off)
System Common Messages		
11110000	0iiiiiii [0iiiiiii 0iiiiiii] 0ddddddd --- --- 0ddddddd 11110111	System Exclusive. This message type allows manufacturers to create their own messages (such as bulk dumps, patch parameters, and other non-spec data) and provides a mechanism for creating additional MIDI Specification messages. The Manufacturer's ID code (assigned by MMA or AMEI) is either 1 byte (0iiiiiii) or 3 bytes (0iiiiiii 0iiiiiii 0iiiiiii). Two of the 1 Byte IDs are reserved for extensions called Universal Exclusive Messages, which are not manufacturer-specific. If a instrument recognizes the ID code as its own (or as a supported Universal message) it will listen to the rest of the message (0ddddddd). Otherwise, the message will be ignored. (Real-Time messages only may be interleaved with a System Exclusive.) (see Annex C)
11110001	0nnnddddd	MIDI Time Code Quarter Frame. nnn = Message Type dddd = Values
11110010	0lllllll 0mmmmmmm	Song Position Pointer. This is an internal 14 bit register that holds the number of MIDI beats (1 beat= six MIDI clocks) since the start of the song. (lllllll) are the least significant 7 bits. (mmmmmmm) are the most significant 7 bits.
11110011	0sssssss	Song Select. The Song Select specifies which sequence or song is to be played.
11110100		(Reserved)
11110101		(Reserved)
11110110		Tune Request. Upon receiving a Tune Request, all analog synthesizers should tune their oscillators.

AVA Documents
Document Sharing Hub
Full document details: IEC 63035-2017

Status D7----D0	Data Byte(s) D7----D0	Description
11110111		End of Exclusive. Used to terminate a System Exclusive dump (see Annex C).
System Real-Time Messages		
11111000		Timing Clock. Sent 24 times per quarter note when synchronization is required.
11111001		(Reserved)
11111010		Start. Start the current sequence playing from the beginning. (This message will be followed with Timing Clocks).
11111011		Continue. Continue at the point the sequence was Stopped.
11111100		Stop. Stop the current sequence.
11111101		(Reserved)
11111110		Active Sensing. This message is intended to be sent repeatedly to tell the receiver that a connection is alive. Use of this message is optional. When initially received, the receiver will expect to receive another Active Sensing message each 300 ms (max), and if it does not then it will assume that the connection has been terminated. At termination, the receiver will turn off all voices and return to normal (non- active sensing) operation.
11111111		Reset. Reset all receivers in the system to power-up status. This should be used sparingly, preferably under manual control. In particular, it should not be sent on power-up.

Documents
Document Sharing Hub
Full document details: IEC 63035-2017