IEC 63056

Edition 1.0 2020-03

INTERNATIONAL STANDARD

NORME INTERNATIONALE

colour inside

Secondary cells and batteries containing alkaline or other non-acid electrolytes – Safety requirements for secondary lithium cells and batteries for use in electrical energy storage systems

Accumulateurs alcalins et autres accumulateurs à électrolyte non acide – Exigences de sécurité pour les accumulateurs au lithium pour utilisation dans des systèmes de stockage d'énergie électrique

IEC 63056:2020-03(en-fr)

AVA Documents
Document Sharing Hub

Full document details: IEC 63056-2020

THIS PUBLICATION IS COPYRIGHT PROTECTED
Copyright © 2020 IEC, Geneva, Switzerland

All rights reserved. Unless otherwise specified, no part of this publication may be reproduced or utilized in any form or by any means, electronic or mechanical, including photocopying and microfilm, without permission in writing from either IEC or IEC's member National Committee in the country of the requester. If you have any questions about IEC copyright or have an enquiry about obtaining additional rights to this publication, please contact the address below or your local IEC member National Committee for further information.

Droits de reproduction réservés. Sauf indication contraire, aucune partie de cette publication ne peut être reproduite ni utilisée sous quelque forme que ce soit et par aucun procédé, électronique ou mécanique, y compris la photocopie et les microfilms, sans l'accord écrit de l'IEC ou du Comité national de l'IEC du pays du demandeur. Si vous avez des questions sur le copyright de l'IEC ou si vous désirez obtenir des droits supplémentaires sur cette publication, utilisez les coordonnées ci-après ou contactez le Comité national de l'IEC de votre pays de résidence.

IEC Central Office
3, rue de Varembé
CH-1211 Geneva 20
Switzerland

Tel.: +41 22 919 02 11
info@iec.ch
www.iec.ch

About the IEC
The International Electrotechnical Commission (IEC) is the leading global organization that prepares and publishes International Standards for all electrical, electronic and related technologies.

About IEC publications
The technical content of IEC publications is kept under constant review by the IEC. Please make sure that you have the latest edition, a corrigendum or an amendment might have been published.

IEC publications search - webstore.iec.ch/advsearchform
The advanced search enables to find IEC publications by a variety of criteria (reference number, text, technical committee,…). It also gives information on projects, replaced and withdrawn publications.

IEC Just Published - webstore.iec.ch/justpublished
Stay up to date on all new IEC publications. Just Published details all new publications released. Available online and once a month by email.

IEC Customer Service Centre - webstore.iec.ch/csc
If you wish to give us your feedback on this publication or need further assistance, please contact the Customer Service Centre: sales@iec.ch.

Electropedia - www.electropedia.org
The world's leading online dictionary on electrotechnology, containing more than 22 000 terminological entries in English and French, with equivalent terms in 16 additional languages. Also known as the International Electrotechnical Vocabulary (IEV) online.

IEC Glossary - std.iec.ch/glossary
67 000 electrotechnical terminology entries in English and French extracted from the Terms and Definitions clause of IEC publications issued since 2002. Some entries have been collected from earlier publications of IEC TC 37, 77, 86 and CISPR.

A propos de l'IEC
La Commission Electrotechnique Internationale (IEC) est la première organisation mondiale qui élabore et publie des Normes internationales pour tout ce qui a trait à l'électricité, à l'électronique et aux technologies apparentées.

A propos des publications IEC
Le contenu technique des publications IEC est constamment revu. Veuillez vous assurer que vous possédez l'édition la plus récente, un corrigendum ou amendement peut avoir été publié.

Recherche de publications IEC - webstore.iec.ch/advsearchform
La recherche avancée permet de trouver des publications IEC en utilisant différents critères (numéro de référence, texte, comité d'études,…). Elle donne aussi des informations sur les projets et les publications remplacées ou retirées.

IEC Just Published - webstore.iec.ch/justpublished
Restez informé sur les nouvelles publications IEC. Just Published détaille les nouvelles publications parues. Disponible en ligne et une fois par mois par email.

Service Clients - webstore.iec.ch/csc
Si vous désirez nous donner des commentaires sur cette publication ou si vous avez des questions contactez-nous: sales@iec.ch.

Electropedia - www.electropedia.org
Le premier dictionnaire d'électrotechnologie en ligne au monde, avec plus de 22 000 articles terminologiques en anglais et en français, ainsi que les termes équivalents dans 16 langues additionnelles. Egalement appelé Vocabulaire Electrotechnique International (IEV) en ligne.

Glossaire IEC - std.iec.ch/glossary
67 000 entrées terminologiques électrotechniques, en anglais et en français, extraites des articles Termes et Définitions des publications IEC parues depuis 2002. Plus certaines entrées antérieures extraites des publications des CE 37, 77, 86 et CISPR de l'IEC.

Documents
Document Sharing Hub

Full document details: IEC 63056-2020

IEC 63056

Edition 1.0 2020-03

INTERNATIONAL STANDARD

NORME INTERNATIONALE

colour inside

Secondary cells and batteries containing alkaline or other non-acid electrolytes – Safety requirements for secondary lithium cells and batteries for use in electrical energy storage systems

Accumulateurs alcalins et autres accumulateurs à électrolyte non acide – Exigences de sécurité pour les accumulateurs au lithium pour utilisation dans des systèmes de stockage d'énergie électrique

INTERNATIONAL
ELECTROTECHNICAL
COMMISSION

COMMISSION
ELECTROTECHNIQUE
INTERNATIONALE

ICS 29.220.30

ISBN 978-2-8322-7862-8

Warning! Make sure that you obtained this publication from an authorized distributor.
Attention! Veuillez vous assurer que vous avez obtenu cette publication via un distributeur agréé.

® Registered trademark of the International Electrotechnical Commission
Marque déposée de la Commission Electrotechnique Internationale

AVA Documents
Document Sharing Hub

Full document details: IEC 63056-2020

CONTENTS

FOREWORD ... 3
INTRODUCTION ... 5
1 Scope ... 6
2 Normative references ... 7
3 Terms and definitions ... 7
4 Parameter measurement tolerances ... 9
5 General safety considerations ... 10
5.1 General ... 10
5.2 Insulation and wiring ... 10
5.3 The peak voltage of charging ... 11
6 Type test conditions ... 11
6.1 General ... 11
6.2 Test items ... 11
7 Specific requirements and tests ... 12
7.1 Basic requirement ... 12
7.2 Resistance to abnormal heat ... 12
7.3 Casing material of a battery system that can be transported for installation or maintenance ... 12
7.4 Electric insulation check during transport and installation ... 12
7.5 Charging procedures for test purposes ... 13
7.6 Protection against short circuit during transport and installation ... 13
7.7 Protection for reverse connection ... 13
7.8 Overdischarge control of voltage (battery system) ... 14
7.9 Drop test ... 14
7.9.1 General ... 14
7.9.2 Whole drop test ... 15
7.9.3 Edge and corner drop test ... 15
8 Information for Safety ... 16
9 Marking and designation ... 16
Annex A (informative) Wiring, connections and supply ... 17
Bibliography ... 18

Figure 1 – IEC 62619 as umbrella standard to various industrial applications ... 5
Figure 2 – Scope of IEC 63056 ... 6
Figure 3 – Impact location ... 15
Figure 4 – Configuration for the shortest edge drop test ... 16
Figure 5 – Configuration for the corner drop test ... 16

Table 1 – Type test ... 12
Table 2 – Drop test method and condition ... 14
Table A.1 – IEC 60950-1:2005 subclauses addressing wiring, connections and supply ... 17
Table A.2 – Wiring, connections and supply, as addressed in IEC 62368-1 ... 17

Documents
Document Sharing Hub
Full document details: IEC 63056-2020

INTERNATIONAL ELECTROTECHNICAL COMMISSION

SECONDARY CELLS AND BATTERIES CONTAINING ALKALINE OR OTHER NON-ACID ELECTROLYTES – SAFETY REQUIREMENTS FOR SECONDARY LITHIUM CELLS AND BATTERIES FOR USE IN ELECTRICAL ENERGY STORAGE SYSTEMS

FOREWORD

1) The International Electrotechnical Commission (IEC) is a worldwide organization for standardization comprising all national electrotechnical committees (IEC National Committees). The object of IEC is to promote international co-operation on all questions concerning standardization in the electrical and electronic fields. To this end and in addition to other activities, IEC publishes International Standards, Technical Specifications, Technical Reports, Publicly Available Specifications (PAS) and Guides (hereafter referred to as "IEC Publication(s)"). Their preparation is entrusted to technical committees; any IEC National Committee interested in the subject dealt with may participate in this preparatory work. International, governmental and non-governmental organizations liaising with the IEC also participate in this preparation. IEC collaborates closely with the International Organization for Standardization (ISO) in accordance with conditions determined by agreement between the two organizations.
2) The formal decisions or agreements of IEC on technical matters express, as nearly as possible, an international consensus of opinion on the relevant subjects since each technical committee has representation from all interested IEC National Committees.
3) IEC Publications have the form of recommendations for international use and are accepted by IEC National Committees in that sense. While all reasonable efforts are made to ensure that the technical content of IEC Publications is accurate, IEC cannot be held responsible for the way in which they are used or for any misinterpretation by any end user.
4) In order to promote international uniformity, IEC National Committees undertake to apply IEC Publications transparently to the maximum extent possible in their national and regional publications. Any divergence between any IEC Publication and the corresponding national or regional publication shall be clearly indicated in the latter.
5) IEC itself does not provide any attestation of conformity. Independent certification bodies provide conformity assessment services and, in some areas, access to IEC marks of conformity. IEC is not responsible for any services carried out by independent certification bodies.
6) All users should ensure that they have the latest edition of this publication.
7) No liability shall attach to IEC or its directors, employees, servants or agents including individual experts and members of its technical committees and IEC National Committees for any personal injury, property damage or other damage of any nature whatsoever, whether direct or indirect, or for costs (including legal fees) and expenses arising out of the publication, use of, or reliance upon, this IEC Publication or any other IEC Publications.
8) Attention is drawn to the Normative references cited in this publication. Use of the referenced publications is indispensable for the correct application of this publication.
9) Attention is drawn to the possibility that some of the elements of this IEC Publication may be the subject of patent rights. IEC shall not be held responsible for identifying any or all such patent rights.

International Standard IEC 63056 has been prepared by subcommittee 21A: Secondary cells and batteries containing alkaline or other non-acid electrolytes, of IEC technical committee 21: Secondary cells and batteries.

The text of this International Standard is based on the following documents:

FDIS	Report on voting
21A/718/FDIS	21A/723/RVD

Full information on the voting for the approval of this International Standard can be found in the report on voting indicated in the above table.

This document has been drafted in accordance with the ISO/IEC Directives, Part 2.

Documents
Document Sharing Hub

Full document details: IEC 63056-2020

The committee has decided that the contents of this document will remain unchanged until the stability date indicated on the IEC website under "http://webstore.iec.ch" in the data related to the specific document. At this date, the document will be

- reconfirmed,
- withdrawn,
- replaced by a revised edition, or
- amended.

IMPORTANT – The 'colour inside' logo on the cover page of this publication indicates that it contains colours which are considered to be useful for the correct understanding of its contents. Users should therefore print this document using a colour printer.

Documents
Document Sharing Hub

Full document details: IEC 63056-2020

INTRODUCTION

This document covers safety requirements for secondary lithium cells and batteries for use in Electrical Energy Storage Systems and is under the umbrella standard IEC 62619 as shown in Figure 1. As an umbrella standard, IEC 62619 had been developed which covered various industrial applications in 2017.

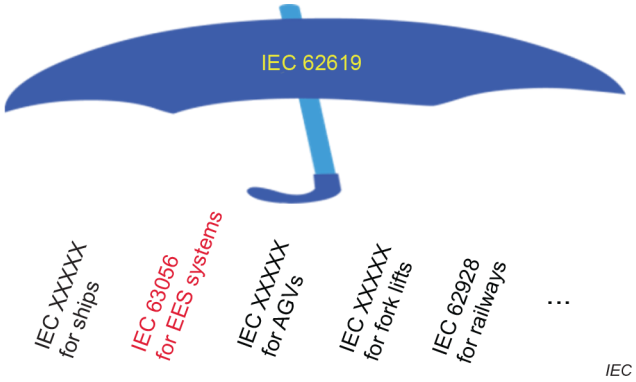

Figure 1 – IEC 62619 as umbrella standard to various industrial applications

Documents
Document Sharing Hub
Full document details: IEC 63056-2020

SECONDARY CELLS AND BATTERIES CONTAINING ALKALINE OR OTHER NON-ACID ELECTROLYTES – SAFETY REQUIREMENTS FOR SECONDARY LITHIUM CELLS AND BATTERIES FOR USE IN ELECTRICAL ENERGY STORAGE SYSTEMS

1 Scope

This document specifies requirements and tests for the product safety of secondary lithium cells and batteries used in electrical energy storage systems (Figure 2) with a maximum DC voltage of 1 500 V (nominal).

Basic safety requirements for the secondary lithium cells and batteries used in industrial applications are included in IEC 62619. This document provides additional or specific requirements for electrical energy storage systems.

Since this document covers batteries for various electrical energy storage systems, it includes those requirements which are common and minimum to the electrical energy storage systems.

Examples of appliances that are within the scope of this document are:

- telecommunications,
- central emergency lighting and alarm systems,
- stationary engine starting,
- photovoltaic systems,
- home (residential) energy storage systems (HESS), and
- large energy storage: on-grid/off-grid.

This document applies to cells and batteries for uninterruptible power supplies (UPS).

This document does not apply to portable systems 500 Wh or below, which are covered by IEC 61960-3.

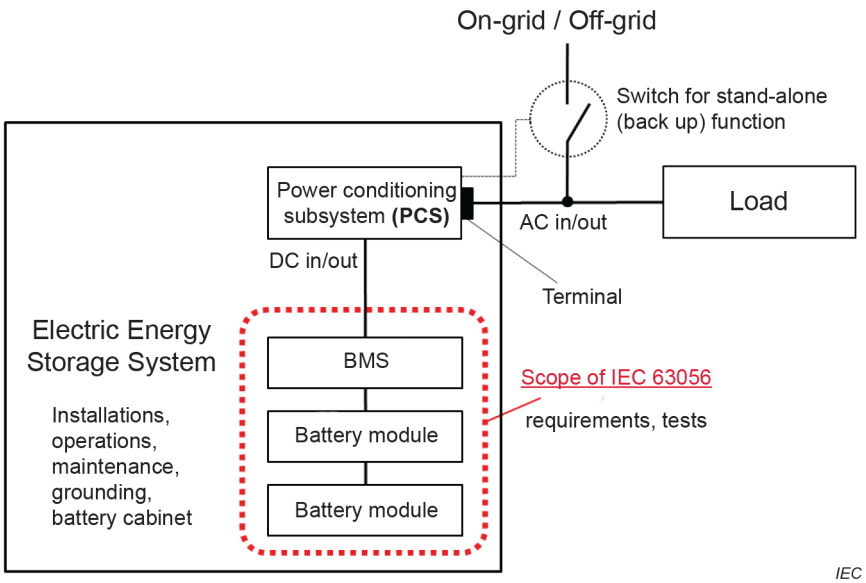

Figure 2 – Scope of IEC 63056

Documents
Document Sharing Hub
Full document details: IEC 63056-2020

2 Normative references

The following documents, in whole or in part, are normatively referenced in this document and are indispensable for its application. For dated references, only the edition cited applies. For undated references, the latest edition of the referenced document (including any amendments) applies.

IEC 60050-482, *International Electrotechnical Vocabulary (IEV) – Part 482: Primary and secondary cells and batteries* (available at http://www.electropedia.org/)

IEC 60695-10-2, *Fire hazard testing – Part 10-2: Abnormal heat – Ball pressure test method*

IEC 60695-11-10, *Fire hazard testing – Part 11-10: Test flames – 50 W horizontal and vertical flame test methods*

IEC 60950-1:2005, *Information technology equipment – Safety – Part 1: General requirements*

IEC 62619, *Secondary cells and batteries containing alkaline or other non-acid electrolytes – Safety requirements for secondary lithium cells and batteries, for use in industrial applications*

IEC 62620:2014, *Secondary cells and batteries containing alkaline or other non-acid electrolytes – Secondary lithium cells and batteries for use in industrial applications*

ISO/IEC Guide 51, *Safety aspects – Guidelines for their inclusion in standards*

3 Terms and definitions

For the purposes of this document, the terms and definitions given in IEC 60050-482, ISO/IEC Guide 51, and the following apply.

ISO and IEC maintain terminological databases for use in standardization at the following addresses:

- IEC Electropedia: available at http://www.electropedia.org/
- ISO Online browsing platform: available at http://www.iso.org/obp

3.1
safety
freedom from unacceptable risk

3.2
risk
combination of the probability of occurrence of harm and the severity of that harm

3.3
harm
physical injury or damage to the health of people or damage to property or to the environment

3.4
hazard
potential source of harm

3.5
intended use
use of a product, process or service in accordance with specifications, instructions and information provided by the supplier

AVA Documents
Document Sharing Hub

Full document details: IEC 63056-2020

3.6
reasonably foreseeable misuse
use of a product, process or service in a way which is not intended by the supplier, but which may result from readily predictable human behaviour

3.7
secondary lithium cell
cell
secondary cell where electrical energy is derived from the insertion/extraction reactions of lithium ions or oxidation/reduction reaction of lithium between the negative electrode and the positive electrode

Note 1 to entry: The cell typically has an electrolyte that consists of a lithium salt and organic solvent compound in liquid, gel or solid form and has a metal or a laminate film casing. It is not ready for use in an application because it is not yet fitted with its final housing, terminal arrangement and electronic control device.

3.8
cell block
group of cells connected together in parallel configuration with or without protective devices (e.g. fuse or positive temperature coefficient device) and monitoring circuitry

Note 1 to entry: It is not ready for use in an application because it is not yet fitted with its final housing, terminal arrangement and electronic control device.

3.9
module
group of cells connected together in a series and/or parallel configuration with or without protective devices (e.g. fuse or positive temperature coefficient device) and monitoring circuitry

3.10
battery pack
energy storage device which comprises one or more cells or modules electrically connected and has monitoring circuitry which provides information (e.g. cell voltage) to a battery system to influence the battery's safety, performance and/or service life

Note 1 to entry: It may incorporate a protective housing and be provided with terminals or other interconnection arrangement.

3.11
battery system
battery
system which comprises one or more cells, modules or battery packs and has a battery management system capable of controlling current in case of overcharge, overcurrent, overdischarge, and overheating

Note 1 to entry: Overdischarge cut off is not mandatory if there is an agreement between the cell manufacturer and the customer

Note 2 to entry: The battery system may have cooling or heating units. More than one battery system may constitute a larger battery system.

3.12
battery management system
BMS
set of protection functions associated with a battery to prevent overcharge, overcurrent, over-temperature, under-temperature and, if applicable, overdischarge and which monitors and/or manages its state, calculates secondary data, reports that data and/or controls its environment to influence the battery's safety, performance and/or service life

Note 1 to entry: Overdischarge cutoff is not mandatory if there is an agreement between the cell manufacturer and the customer.

AVA Documents
Document Sharing Hub

Full document details: IEC 63056-2020

Note 2 to entry: The function of the BMS can be assigned to the battery pack or to equipment that uses the battery.

Note 3 to entry: The BMS can be divided and it can be found partially in the battery pack and partially on the equipment that uses the battery.

Note 4 to entry: The BMS is sometimes also referred to as a BMU (battery management unit).

Note 5 to entry: This note applies to the French language only.

3.13
leakage
visible escape of liquid electrolyte

3.14
venting
release of excessive internal pressure from a cell, module, battery pack, or battery system in a manner intended by design to preclude rupture or explosion

3.15
rupture
mechanical failure of a cell container or battery case induced by an internal or external cause, resulting in exposure or spillage but not ejection of materials

3.16
explosion
failure that occurs when a cell container or battery case opens violently, and solid components are forcibly expelled

Note 1 to entry: Liquid, gas, and smoke may be erupted.

3.17
fire
emission of flames from a cell, module, battery pack, or battery system

3.18
rated capacity
capacity value of a cell or battery determined under specified conditions and declared by the manufacturer

Note 1 to entry: The rated capacity is the quantity of electricity C_n Ah (ampere-hours) declared by the manufacturer, which a single cell or battery can deliver during an n-hour period when charging, storing and discharging under the conditions specified in IEC 62620:2014, 6.3.1.

[SOURCE: IEC 60050-482:2004, 482-03-15, modified – "battery" has been replaced by "cell or battery" and Note 1 to entry has been added.]

4 Parameter measurement tolerances

The overall accuracy of controlled or measured values, relative to the specified or actual parameters, shall be within the following tolerances:

a) ±0,5 % for voltage;

b) ±1 % for current;

c) ±2 °C for temperature;

d) ±0,1 % for time;

e) ±1 % for mass;

f) ±1 % for dimensions.

Documents
Document Sharing Hub

Full document details: IEC 63056-2020

These tolerances comprise the combined accuracy of the measuring instruments, the measurement techniques used, and all other sources of error in the test procedure.

The details of the instrumentation used shall be provided in any report of results.

5 General safety considerations

5.1 General

Battery systems and the cells they contain shall comply with the applicable general safety considerations of IEC 62619. Within the standard temperature range, secondary cells can be charged at the maximum charge current, which is specified from a safety point of view. Lithium-ion cells shall always be operated within the operating region values and the storage conditions specified by the manufacturer.

The safety of lithium secondary cells and battery systems requires the consideration of two sets of applied conditions:

1) intended use;
2) reasonably foreseeable misuse.

Cells and battery systems shall be so designed and constructed that they are safe under conditions of both intended use and reasonably foreseeable misuse. It may also be expected that cells and battery systems subjected to intended use shall not only be safe but shall continue to be functional in all respects.

It is expected that cells or battery systems subjected to misuse may fail to function. However, even if such a situation occurs, they shall not present any significant hazards.

Potential hazards which are the subject of this document are:

a) fire,
b) burst/explosion,
c) critical electrical short circuit due to leakage of cell electrolyte, mechanical deformation or incorrect installation,
d) venting that continuously vents out flammable gases,
e) rupture of the casing of cell, module, battery pack, and battery system with exposure of internal components.

Conformity is checked by the tests in accordance with the appropriate standards in Clause 2.

Moving parts that have potential to cause human injuries shall be applied appropriate design and necessary measures in order to reduce the risk of injuries, including those that may be incurred during installation while cells or battery systems are being incorporated into equipment.

5.2 Insulation and wiring

Wiring and its insulation shall be sufficient to withstand the maximum anticipated voltage, current, temperature, altitude and humidity requirements. The design of wiring shall be such that adequate clearances and creepage distances are maintained between conductors in accordance with IEC 60950-1:2005, 3.1 and 3.2 (test temperature relies on the battery system's operating region specified by the manufacturer). Hazardous live parts of the battery system shall be protected to avoid the risk of electric shocks, including during installation.

Documents
Document Sharing Hub
Full document details: IEC 63056-2020

The mechanical integrity of the whole battery system (cell/module/BMS) and their connections shall follow the requirements from the end-use equipment manufacturer. When there are no requirements provided from the end use equipment in which the battery system is to be installed, Annex A may be used.

The battery system manufacturer shall indicate the maximum allowed number of series connections of a module or a battery system in the specification or instruction manual.

5.3 The peak voltage of charging

When a charging current has an alternating component, a battery system manufacturer shall ensure that the peak voltage of the charging current is under the upper limit charging voltage, specified by the battery system manufacturer, by monitoring the voltage of every single cell or cell block.

6 Type test conditions

6.1 General

A battery system that is used outside of its operating region may exhibit hazards resulting from the cells or battery system. Such risks have to be taken into consideration in order to prepare a safe test plan.

The test facility should have a sufficient structural integrity and a fire suppression system to sustain the conditions of overpressure and fire that may occur as a result of testing. The facility should have a ventilation system to remove and capture gas that might be produced during the tests. Consideration should be given to high-voltage hazards when applicable.

Warning: THESE TESTS USE PROCEDURES WHICH MAY RESULT IN HARM IF ADEQUATE PRECAUTIONS ARE NOT TAKEN. TESTS SHOULD ONLY BE PERFORMED BY QUALIFIED AND EXPERIENCED TECHNICIANS USING ADEQUATE PROTECTION. TO PREVENT BURNS, PRECAUTIONS SHOULD BE TAKEN FOR THOSE CELLS OR BATTERY SYSTEMS WHOSE CASINGS MAY EXCEED 75 °C AS A RESULT OF TESTING.

6.2 Test items

Tests are made with the DUT (device under test), using cells or battery systems that are stored under conditions specified by the cell manufacturer for not more than six months.

The DUT charged by the method specified in 7.2 shall deliver the rated capacity or more when they are discharged at 25 °C ± 5 °C, at a constant current of 0,2 I_t A, down to a specified final voltage. This capacity confirmation may be done in the cell manufacturer's shipping inspection. In the case of a battery system, the capacity may be calculated on the basis of the cell capacity measurements during the cell manufacturer's shipping inspection.

Unless otherwise specified, tests are carried out in an ambient temperature of 25 °C ± 5 °C.

NOTE Test conditions are for type tests only and do not imply that intended use includes operation under these conditions. Similarly, the limit of six months is introduced for consistency and does not imply that cell and battery system safety is reduced after six months.

The type test is outlined in Table 1.

Documents
Document Sharing Hub

Full document details: IEC 63056-2020